Gabriel®
COMMERCIAL VEHICLE
An ArvinMeritor™ Brand

2007 GABRIEL® COMMERCIAL RIDE CONTROL PRODUCTS CATALOG

Gabriel®
COMMERCIAL VEHICLE

an ArvinMeritor brand

GasSLX
Heavy Truck Gas Shocks/Adjustable

YEAR 200,000 MILE WARRANTY

89000 Series

Our premium three position adjustable Heavy Truck gas shock.

H.T. FLUID

- Unique Gas Cell double seals for superior gas retention
- Position Adjustable offers personal ride selection
- 1-5/8" bore, 360° arc welded end mounts provides improved durability
- Specially formulated H.T. fluid reduces friction and wear in extreme operating conditions
- Many more premium component upgrades combine to provide the ultimate in performance and durability

FLEETLINE
Heavy Duty Truck Shocks

1 YEAR UNLIMITED MILE WARRANTY

83000 Series

Our smallest heavy duty product, best suited for light trucks or heavy truck front suspensions.

- 1-3/8" bore
- Spun closure[1]
- 9 Stage valving

85000/85300 Series

Added durability makes these two series the standard heavy duty product for today's low friction suspensions.

- 1-5/8" bore provides improved durability
- 360° arc welded end mounts protect against end mount breakage
- Hydraulic rebound stop[2] prevents impact damage to the shock and vehicle mounting components
- Multi-lip piston seal provides backup seal protection
- Welded closure improves pull-apart strength

85700 Series

Designed for unique truck applications and for severe duty bus applications. The specialty features of this series ensure a long consistent operating life.

H.T. FLUID

- 1-5/8" bore with a bulged design provides increased fluid capacity for cooler operation
- Patented rod seal material significantly increases the life of the seal
- Custom blended HT Fluid reduces friction and wear in extreme operating conditions
- All of the specialty features contained in the 85000 & 85300 Series

[1]Welded closure where required.
[2]Where required.

Shock absorbers engineered with the same focus on quality, design, longevity and endurance that has come to characterize our world renowned Original Equipment shock absorbers.

Cab Shocks

Designed specifically to eliminate cab vibration.

- 1", 1-3/16", 1-3/8", 1-5/8" bore sizes provide customized suspension for different cab designs
- Unique Gas Cell[3] design reduces fade as result of fluid aeration
- Exclusive 9 stage valving provides a consistent ride at all speeds
- Premium chrome plated piston rod designed for corrosion resistance and reduced rod seal wear
- Multi-lip piston seal provides backup seal protection and increased durability

G6000 Series

For consistent performance you can count on.

Targeted at standard light truck and van applications.

- 1-3/8" bore
- Gas charged
- Piston rod and radial lip seal
- Non-commercial applications only

Steering Stabilizers

- Reinforced arc welded end mounts protect against end mount breakage and provide improved durability
- Unique Gas Cell design separates air and oil so shock functions properly while in the horizontal position
- Custom designed (O.E. styled) mounts for improved fit and increased durability

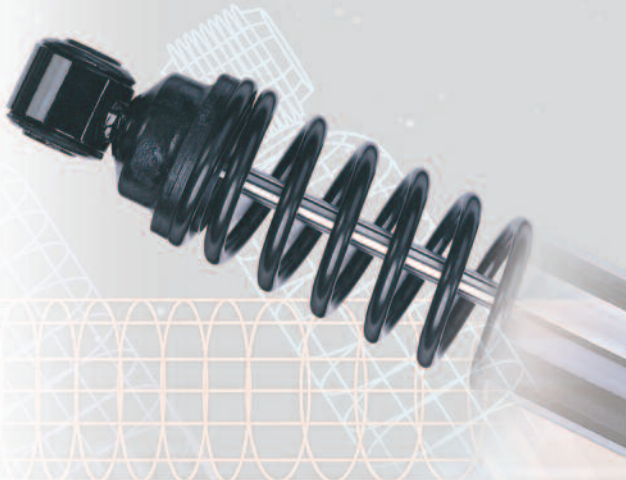

[3]Where design permits

TABLE OF CONTENTS

About Gabriel Heavy Truck Shocks

Product Information 1
When Shocks Should be Changed 8
Shock Disposal Instructions 11
Warranty Policy 12
Catalog Changes 13

Applications Listing

Cab Shocks 14
Shocks for Special Applications 19
(Steering Stabilizers, Hood Dampers)
Light Trucks 20
Medium & Heavy Duty Trucks, Trailers & Buses 44

Numerical Listing

Shocks for Special Applications 176
Gas Light Truck 176
Fleetline 178
GasSLX 185

Interchange Listing

Competitive Interchange 188
O.E.M. Interchange 201
Fleetline/GasSLX Interchange 217
Manufacturer No. to Catalog No. Interchange 218

How to Determine the Correct Shock for Your Truck

Determining the Series/Measuring External Dimensions 220
Identifying the Mounting Style/Measuring Extended & Collapsed Lengths 221
Determining the Mounting Code/Gabriel End Mount Designs 222
Finding the Correct Part Number/Specifications by End Mount 226
Specifications by Part Number 236

Mounting Accessory Packages

Component Parts Listing 247
Buyer's Guide 253

Sección en español

Tabla de materias 255

Section française

Table des matières 269

FLEETLINE

Cab Shocks

Designed specifically to keep eliminate cab vibration!

"See pages 14 - 18 for specific applications listing."

- Unique GAS CELL* design reduces fade
- Exclusive 9 stage valving provides consistent control at all speeds
- Premium chrome plated piston rod designed for corrosion resistance and reduced rod seal wear
- Multi-lip nitrile piston rod seal for increased durability
- All weather shock fluid keeps shock functioning normally in extreme temperatures

*Where design permits

1 YEAR UNLIMITED MILE WARRANTY

Gabriel®
COMMERCIAL VEHICLE

an ***ArvinMeritor*** brand

GasSLX Adjustable
Heavy Truck Gas Shocks

The Ultimate "SLXtion" in Ride!

The three position GasSLX adjustable shock allows you to choose from one of 3 settings; "Firm", "Regular" and "Extra Firm."

The "Firm" setting is the closest to the O.E. ride performance.

The "Regular" and "Extra Firm" settings allow you to create either a softer or a firmer ride than that of the O.E. shock absorber under normal circumstances. For a softer ride than that of the O.E. shock absorber, you may choose to click to the "Regular" setting. For a firmer, more controlled ride than that of the O.E. shock absorber, you may choose to click to the "Extra Firm" setting.

The selection is yours to choose!!!

Recoil Force Comparison For Typical GasSLX VS Original Equipment

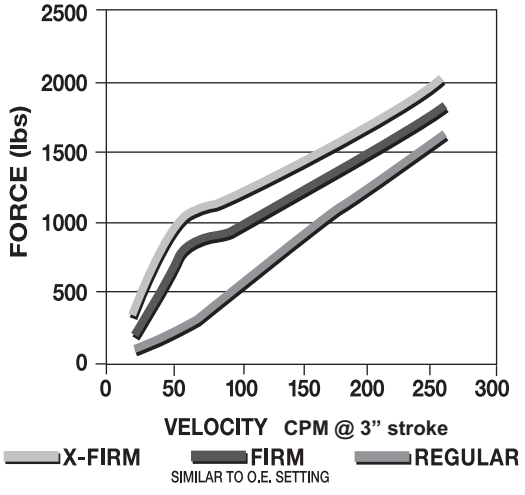

H.T. FLUID

YEAR 200,000 MILE WARRANTY

WITHOUT CONTROL... NOTHING ELSE MATTERS!

Gabriel®
COMMERCIAL VEHICLE

an *ArvinMeritor* brand

RELIABILITY CONTROL COMFORT RIDE SELECTION

GasSLX Heavy Truck Gas Shocks Adjustable

At Gabriel, we believe a premium upgrade is more than just a promise, it's a commitment to deliver. Gabriel's GasSLX was engineered using proven premium components that deliver distinguishable benefits.

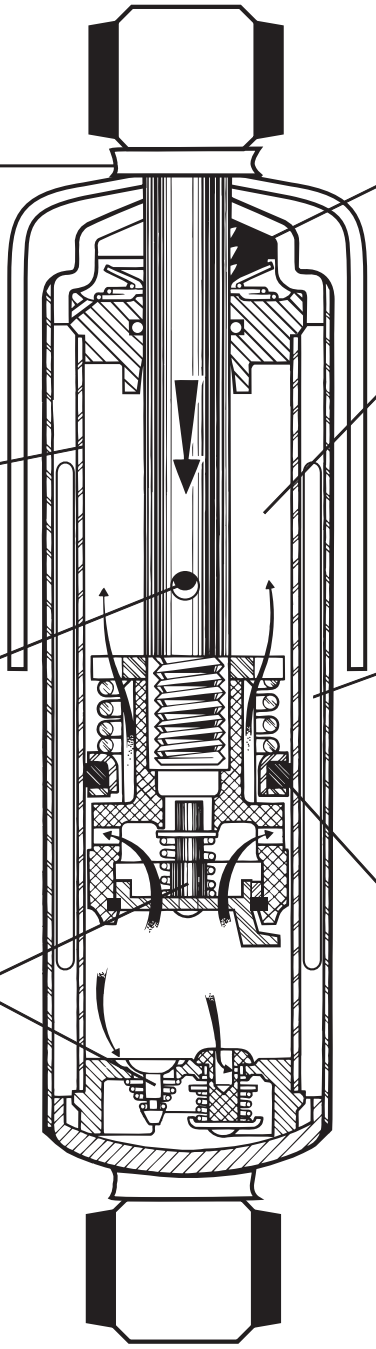

360° ARC WELDED END MOUNTS

Protects Against End Mount Breakage.
Today's suspensions require shocks to withstand multi-directional flexing. Reinforcing the weld 360 , ensures structural superiority.

Improved Tensile Strength.
Gives the added strength required to limit travel on air suspensions.

LARGE BORE DESIGN

1-5/8" Bore. Proven O.E.M. Design.
The optimum working area when combined with our HT fluid, provides performance and durability you can count on.

HYDRAULIC REBOUND STOP

Prevents Impact Damage to the Shock and Vehicle Mounting Components.
At full extension, the restriction hole in the rod is closed off and traps fluid between the piston and upper cylinder head, creating a hydraulic cushion.

9 STAGE VALVING

Improves Handling While Maintaining Ride Comfort.
Allows for the independent adjustment of damping.

MULTI-LIP VITON SEAL

A More Robust Seal Design for Greater Fluid Retention and High Temperature Performance.
Multi-sealing lips act as backup to keep fluid in.

HIGH TEMPERATURE (HT) FLUID

Reduces Friction and Wear in Extreme Operating Conditions.
Extreme pressures and temperatures can break down standard shock absorber fluids. Gabriel's HT Fluid is uniquely formulated to maintain its lubricating properties at pressures and temperatures 2 to 3 times greater than standard shock fluids.

H.T. FLUID

GAS CELL

Double Seals Sulfur Hexafluoride (SF6) Gas to Ensure that it Remains Within the Shock.
The gas cell separates the gas from the fluid so they cannot mix, keeping the fluid free of the bubbles that can cause fade.

PRESSURIZED METAL PISTON RING

Hydraulically Energized to Maintain the Required Damping Characteristics.
As the ring wears, the hydraulic pressure forces the ring out to the tube to maintain the seal and damping characteristics.

1 YEAR 200,000 MILE WARRANTY

Gabriel®
COMMERCIAL VEHICLE
an ArvinMeritor brand

FLEETLINE

Heavy Duty Truck Shock Absorbers

Top quality components ensure top performance throughout the life of the shock absorber, meaning less wear and tear on other costly suspension parts.

Shocks that take the Load and Keep You In Control!

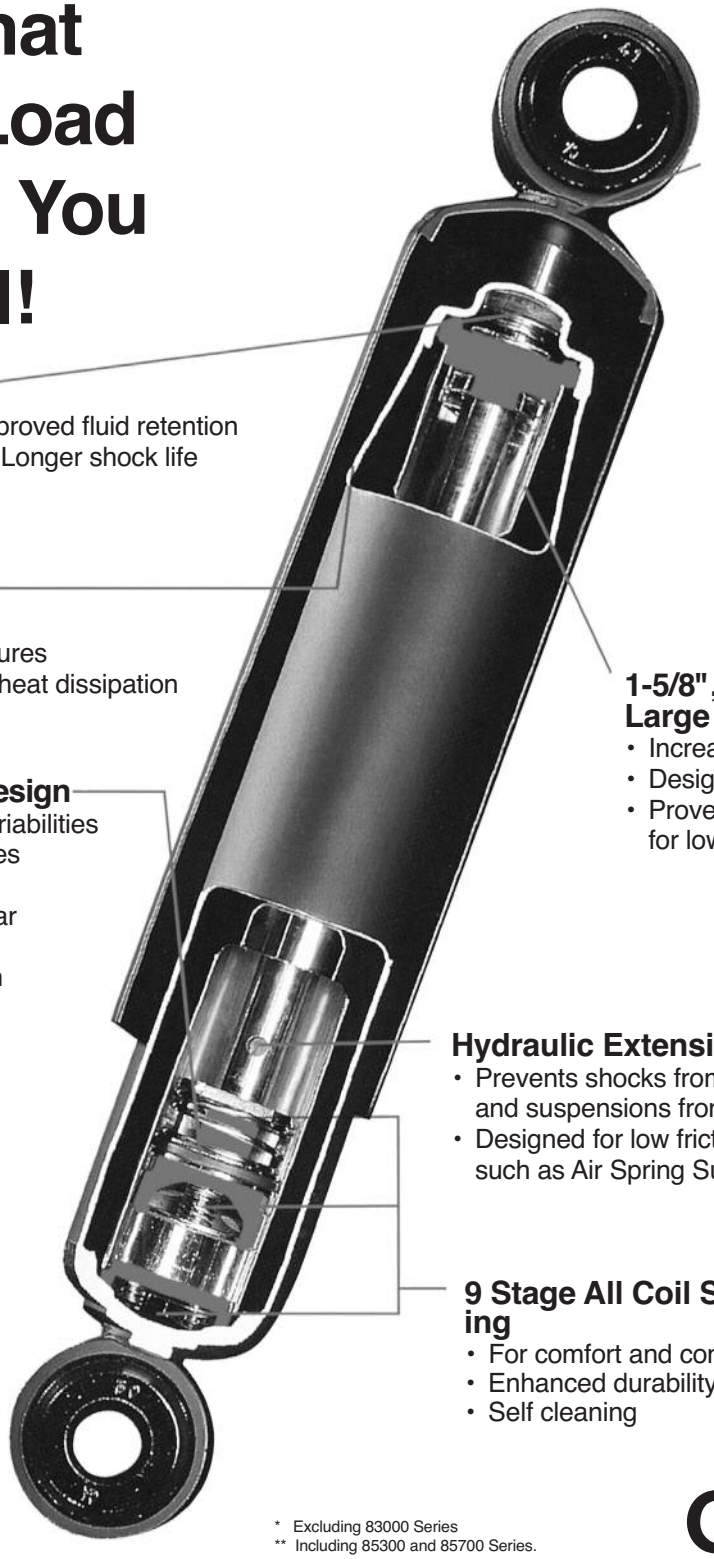

Multi Lip Seal
- Extra seal protection = Improved fluid retention
- Improved fluid retention = Longer shock life

Bulged Design**
- Increased fluid capacity
- Lower operating temperatures
- Less internal wear due to heat dissipation

Floating Piston Seal Design
- Reduces force-velocity variabilities
- Increase control capabilities at low velocities
- Self -compensates for wear
- Reduced wear between the cylinder and the piston seal means reduced clearance which means less fade
- Less fade means more consistent performance over the full range

Cold Formed, 360° Arc Welded Mounts*
- Greater tensile strength
- Greatly reduces end mount failures

1-5/8", Large Bore Design*
- Increased tensile strength
- Designed for more control
- Proven design for low friction suspensions

Hydraulic Extension Stop
- Prevents shocks from topping out and suspensions from over-extending
- Designed for low friction suspensions such as Air Spring Suspensions, etc.

9 Stage All Coil Spring Valving
- For comfort and control
- Enhanced durability
- Self cleaning

1 YEAR UNLIMITED MILE WARRANTY

* Excluding 83000 Series
** Including 85300 and 85700 Series.

NOTE : Features may vary by part number.

Gabriel®
COMMERCIAL VEHICLE
an *ArvinMeritor* brand

Evolution to Higher Performing Shocks

The evolution to higher performing suspensions has been a long time coming! More and more of today's heavy truck and trailer suspensions are equipped with low friction suspensions such as Air Spring or Taper Leaf. The higher performance demands & increased travel of these low friction suspensions has made it imperative that shocks operate at peak performance levels.

Multi-Leaf Suspension

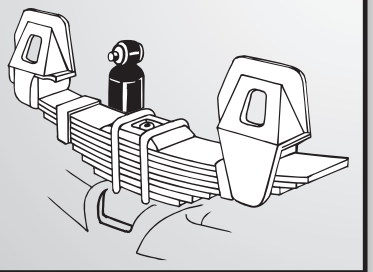

The inherent damping friction limits suspension travel to 2–3".

What was....

Heavy multi-leaf suspensions have very limited travel and a great deal of inherent friction. The multi-leaf quickly dampens suspension oscillation and therefore limits the amount of work shock absorbers need to perform.

What is and what will be....

The new generation of low friction suspensions such as Air Spring and Taper Leaf are engineered to have very little suspension damping friction and a great deal of vertical travel. These characteristics enhance the operational control and performance of today's trucks and trailers in addition to reducing physical strain on the driver by isolating equipment and its cargo from highway vibration damage.

Air Spring Suspension

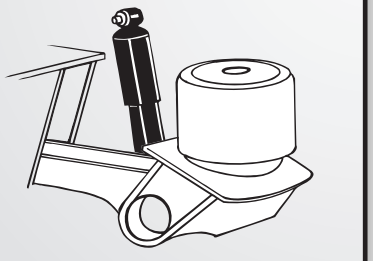

Taper-Leaf Suspension

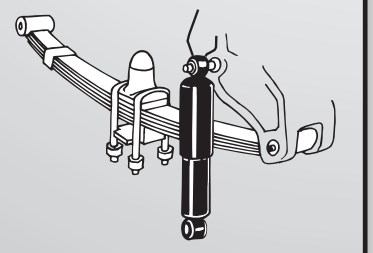

The damping responsibility has been shifted over to shocks These suspensions can travel in excess of 9".

The right shocks are needed more than ever....

The move to low friction suspension has increased the need for the control of suspension oscillation and has elevated the status of the shock absorber to a **critical component** on today's heavy truck and trailer.

We have the shocks that are right for your needs!
After all, Without control....
Nothing else matters!

Gabriel®
COMMERCIAL VEHICLE
an *ArvinMeritor* brand

WHEN SHOULD SHOCK ABSORBERS BE CHANGED

All of the following conditions indicate that it is time to replace your shock absorbers. Remember worn shock absorbers can cause vibration that leads to electrical, frame, and/or engine damage. Regular inspection of shock absorbers can prolong the life of your truck.

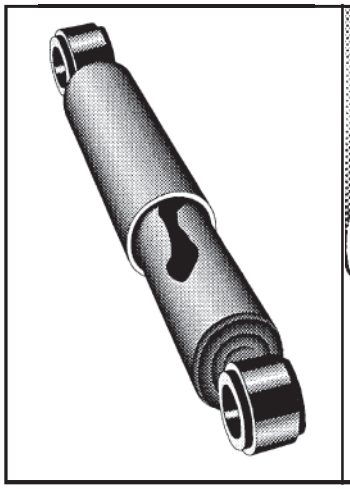

L
Leaking
(Be sure to wipe shock of road grime.)

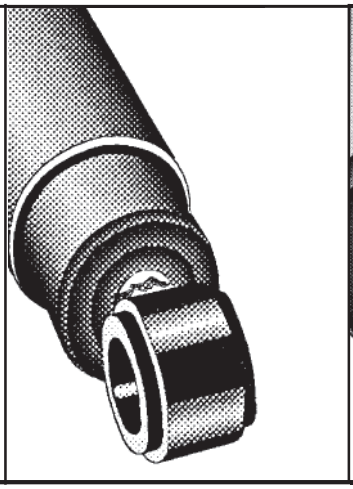

UMB
LMB
Upper or lower mount broken

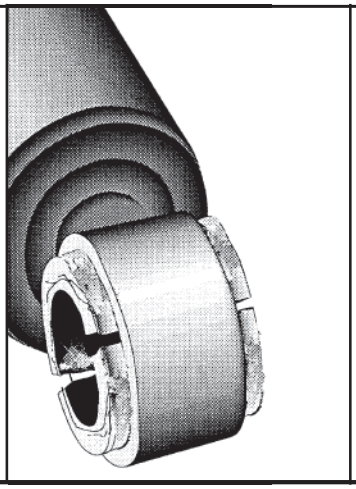

UBB
LBB
Upper or lower bushing broken

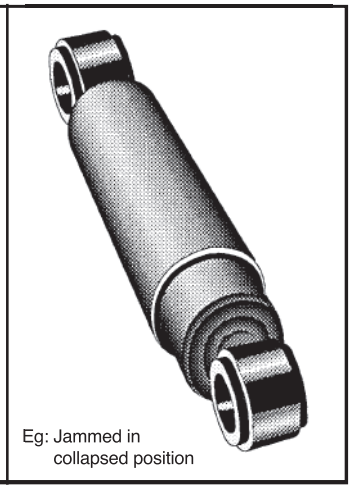

BI
S
Broken internally
Seized

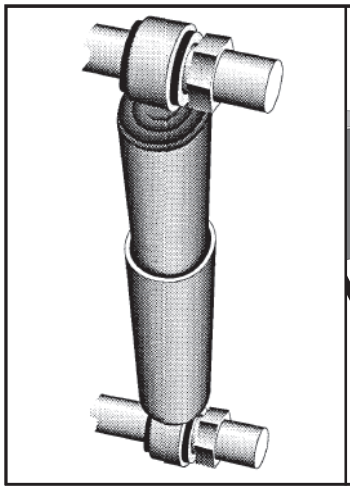

II
Improper Installation
(For example: this shock is upside down.)

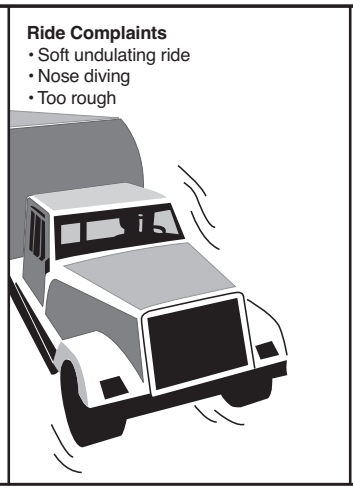

RC
Ride Complaint

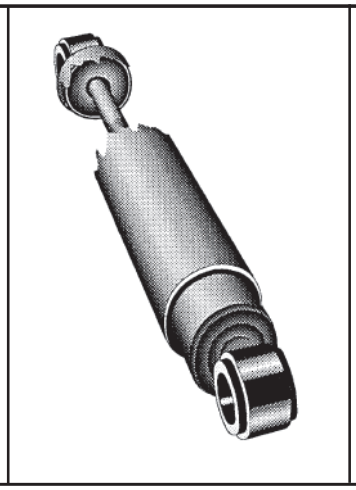

DT
Dust Tube Broken

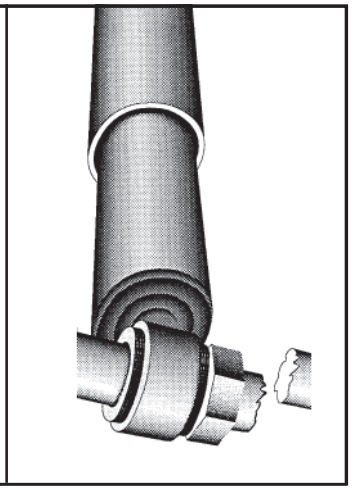

TMF
Truck Mount Failure

Gabriel®
COMMERCIAL VEHICLE

an ***ArvinMeritor*** brand

Guide to Inspecting TRUCK SHOCKS

Regularly scheduled shock maintenance doesn't cost in the long run - it saves!

Like most other chassis components, a program of regular scheduled maintenance for shock absorbers will help to avoid unscheduled down time and reduce overall maintenance costs.

The role of a shock has changed dramatically. Not so many years ago, most suspensions had heavy multi-leaf springs with limited travel and a great deal of inherent friction. These suspensions quickly self dampened and therefore limited the amount of work the shock needed to perform.
Low friction suspensions such as air and taper leaf have dramatically changed the shock's role. Shocks now play a critical role in dampening suspension oscillation.

Properly functioning shocks can help reduce the wear of more expensive suspension components such as air bags, while assisting in the reduction of tire wear and vibration damage to the cab and chassis. They also aid in reducing driver fatigue. Worn shocks simply cannot assist in providing control over today's sophisticated suspension systems.

When should shocks be replaced?

There are many tell tale signs that indicate it **may** be time to replace shocks.

Inspect for:

Uneven Tire Wear - Balance should be checked first
Ride Deterioration
Excess Vibration
Sagging Taper Leaf Springs - This is not caused by weak shocks
Premature wear on cab, electrical, and cooling system components
Broken or Torn Air Springs - Shocks will only affect this if they are broken or are missing

LEAKING VS. MISTING SHOCKS

Misting shocks are often mis-diagnosed as failures. Misting is the process whereby very small amounts of shock fluid evaporate at high operating temperatures through the upper seal of the shock. When the "mist" reaches the cooler outside air, it condenses and forms a film on the outside of the shock body. When mixed with road debris and dust, a grime will often coat the entire body of the shock. Misting is a perfectly normal and necessary function of the shock. The fluid which evaporates through the seal area helps to lubricate & prolong the life of the seal.

Many technicians find it difficult to differentiate between a misting shock and a true leaker which needs to be replaced. A leaker will show clear signs of fluid leaking in streams from the upper seal. These streams can most easily be seen when the shock is fully extended, and one inspects as far up the main body of the shock (underneath the dust cover or tube) as possible.

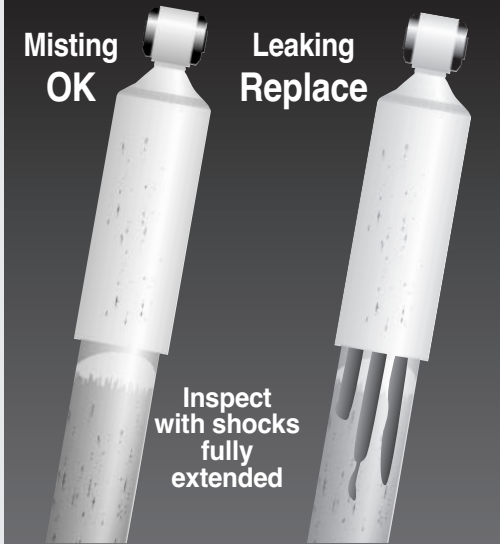

Take the HEAT TEST

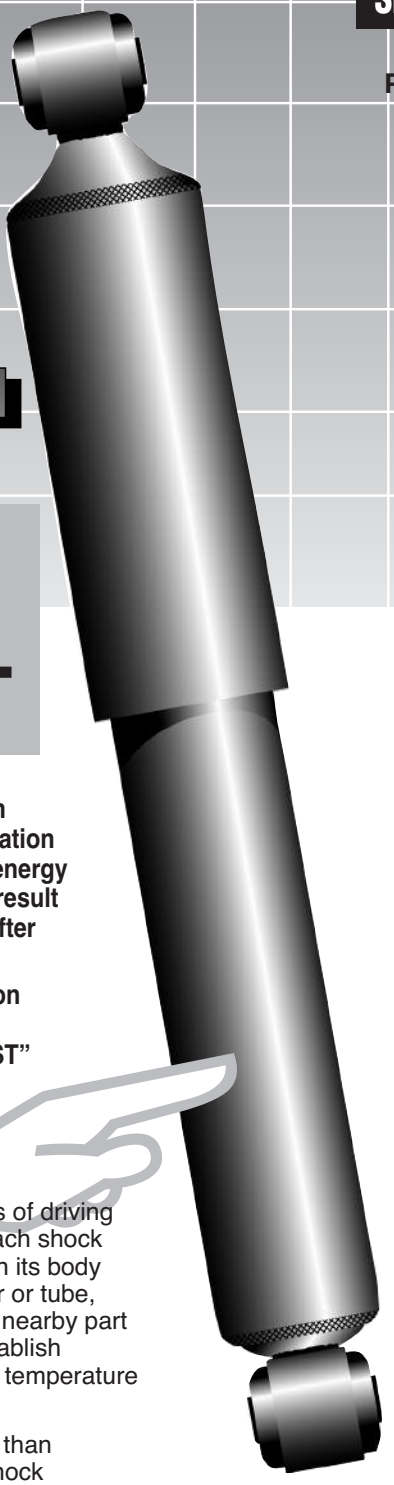

SHOCK VISUAL CHECKS

LOOK FOR THESE POTENTIAL PROBLEMS

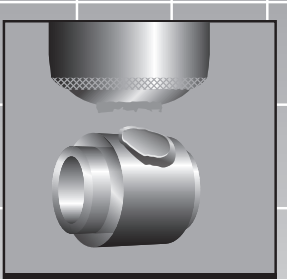

Upper or lower mount broken

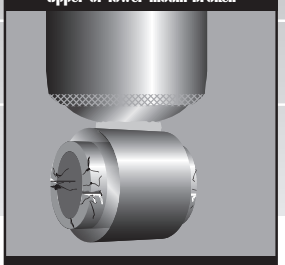

Upper or lower bushing broken
These can be replaced very easily and are considered a regular maintenance item on a shock absorber.

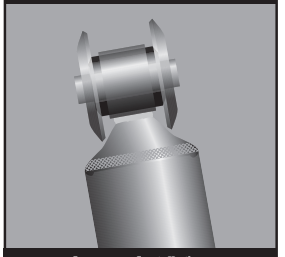

Improper Installation
For Example: Washers installed backwards.

Dust tube broken

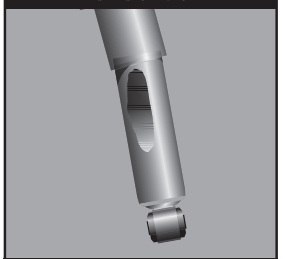

Bent/dented

Shock absorbers function at temperatures ranging from ambient to 350°F. A shock's role is to dampen the oscillation of the truck's springs. It does this by transforming the energy produced by the spring to heat and dissipating it. As a result the shock should be slightly warm to hot to the touch after normal use.

If ride deterioration is experienced and there is suspicion that a shock has failed internally, which is visually undetectable, perform the following "SHOCK HEAT TEST" within a few minutes of operating the equipment:

1 Drive the vehicle at moderate speeds for at least 15 minutes.

2 Within a few minutes of driving the vehicle, touch each shock absorber carefully on its body below the dust cover or tube, after first touching a nearby part of the chassis to establish a reference ambient temperature of the metal.

3 All shock absorbers should be warmer than the chassis. Suspect a failure in any shock absorber that is noticeably cooler than its mate on the other end of the axle. Different temperatures from axle to axle do not indicate failures, but cooler temperatures on any one axle does warrant removal and examination of the cooler shock absorber.

4 To inspect for an internal failure, remove and shake the suspected shock. Listen for the sound of metal parts rattling inside. Rattling of metal parts can indicate that the shock has an internal failure.

ArvinMeritor

Meritor Heavy Vehicle Systems, LLC
7975 Dixie Highway
Florence, KY 41042 USA
800-387-3889
www.arvinmeritor.com

© Copyright 2001
ArvinMeritor, Inc.

Made in Canada

Issued 02-01
A9920 (074-94)
ISO 9001 & QS-9000 Registered

Disposal Instructions For Gabriel Heavy Truck Shock Absorbers

General Remark

Appropriate protective measures, such as wearing safety glasses and protective gloves, should be taken when removing oil and gas from discarded and defective shock absorbers.

Procedure:

1. Secure the shock absorber in a horizontal position.
2. Fully extend the piston rod prior to drilling the unit.
3. Using a 1/8" (3mm) drill bit drill a hole in a downward direction approximately 1.0" (25 mm) from the bottom of the shock absorber to a depth of about 1.0" (25 mm) (see fig. A).
4. Drill a second hole of about 1/8" (3 mm) at 2.0" (50 mm) from the top of the shock absorber to depth of about 1.0" (25 mm), in order to allow all of the oil to flow out (see fig. B).
5. By moving the piston rod in and out, begin stroking the unit to completely purge the oil from the cylinder of the unit (see fig. C).

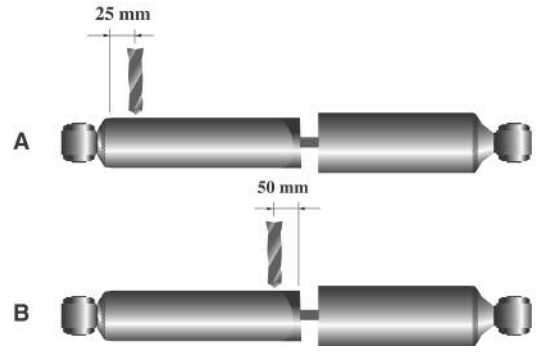

Warning: <u>For gas charged shock absorbers</u>, it is important to cover the area where the hole is being drilled with a towel or some type of shield to prevent spraying gas and oil upon initial penetration of the drill bit.

Environmental Information

6. Collect all used oil, **being careful not to mix oil with any other waste or refuse.** Store the used oil in an approved container clearly marked “Used Oil”.
7. Dispose of the remaining shock body and internal parts in accordance with your local State or Provincial legislation concerning waste oil and other wastes.
8. Store, dispose, and/or transport used oil in accordance with environmental regulations and used oil program regulations in your state or province.

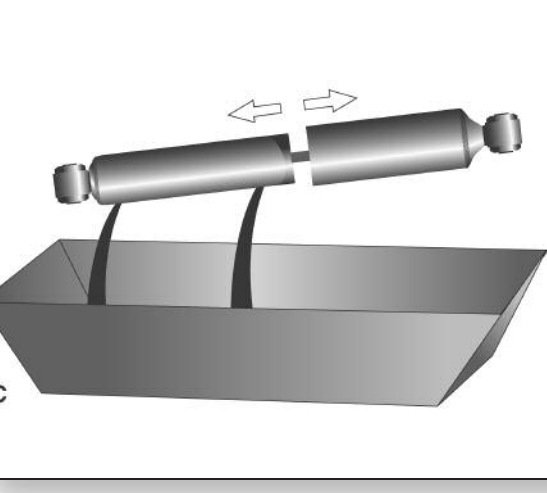

Used shock oil may be disposed in the container used for recycling engine oils. Information on where to dispose of the oil and other parts can be obtained from environmental authorities or oil suppliers.

Warranty Policy on Gabriel Shock Absorbers

Heavy Truck Program

Commercial Warranty

ArvinMeritor, the manufacturers of Gabriel Shock Absorbers warrants its:

GasSLX Shock Absorbers (89000 Series) against manufacturing defects for two years from date of purchase or for 200,000 miles (322,000 km) whichever occurs first.

FLEETLINE Shock Absorbers (83000, 85000, 85300, 85700, 85900 and 87000 Series) against manufacturing defects for one year from date of purchase, unlimited mileage.

THIS COMMERCIAL WARRANTY IS LIMITED TO THE REPLACEMENT OF THE DEFECTIVE PRODUCT ONLY. Cost of shipping, removal and installation is not included. This warranty applies to the original purchaser under normal operating conditions.

The provisions of this warranty shall not apply to product: (a) installed on any vehicle(s) registered or used for racing, or competitive purposes, (b) used for any purpose for which it was not designed, (c) which has been altered or subjected to misuse, negligence or accident, (d) which has been improperly installed.

Non-Commercial Warranty

ArvinMeritor, the manufacturers of Gabriel Shock Absorbers warrants its:

GAS Light Truck Shock Absorbers, (G60000 Series) against manufacturing defects for one year from date of purchase or for 25,000 miles (40,250 km) whichever occurs first. This warranty applies to the original purchaser, for use on private passenger light trucks and vans only, under normal operating conditions.

THIS WARRANTY IS LIMITED TO THE REPLACEMENT OF THE DEFECTIVE PRODUCT ONLY. Cost of shipping, removal and installation is not included.

The provisions of this warranty shall not apply to product: (a) installed on any vehicle(s) registered or used for commercial, racing, or competitive purposes, (b) used for any purpose for which it was not designed, (c) which has been altered or subjected to misuse, negligence or accident, (d) which has been improperly installed.

Gabriel®
COMMERCIAL VEHICLE
an ArvinMeritor brand

FLEETLINE → GasSLX

Interchange
Intercambio
Échange

GasSLX ✕ FLEETLINE

IMPORTANT NOTE: Interchange must only be used for FLEETLINE to GASSLX upgrade. Interchange is **NOT REVERSABLE.**

NOTA IMPORTANTE: El intercambio se debe utilizar solamente de FLEETLINE a GASSLX mejorado. El intercambio **NO ES REVERSIBLE.**

REMARQUE IMPORTANTE: L'échange ne peut se faire que pour le surclassement du FLEETLINE au GASSLX. L'échange **N'EST PAS RÉVERSIBLE.**

Gabriel®
COMMERCIAL VEHICLE
an *ArvinMeritor* brand

Fleetline	Gabriel GasSLX Upgrade
83122	89406
83123	89405
83124	89407
83126	89430
83203	89436
83207	89407
83209	89414
83308	89435
83309	89446
83312	89409
83456	89447
85000	89436
85001	89410
85003	89411
85005	89430
85006	89401
85007	89412
85012	89413
85013	89414
85023	89415
85024	89416
85026	89417
85027	89418
85030	89440
85033	89427
85036	89405
85046	89434
85047	89435
85053	89442
85054	89438
85055	89439
85058	89431
85061	89450
85062	89408
85066	89448
85067	89451
85069	89455
85300	89419
85302	89420
85303	89422
85308	89422
85310	89423
85311	89424
85314	89425
85316	89426
85319	89428
85320	89429
85323	89436
85724	89443
85918	89449
85932	89453
85933	89454
85936	89456

Gabriel®
COMMERCIAL VEHICLE

2007 CATALOG CHANGES

CAMBIOS EN EL CATALOGO 2007

2007 CHANGEMENTS DU CATALOGUE

N		NEW ITEMS		N
ARTICULOS NUEVOS / NOUVEAUX ARTICLES				
646155	83143	85734	85928	85937
83041	83144	85735	85929	85938
83042	83242	85736	85930	85939
83135	85069	85737	85931	89443
83136	85070	85738	85932	89451
83137	85071	85923	85933	89453
83138	85072	85924	85934	89454
83140	85336	85925	85935	89455
83141	85337	85926	85936	89456
83142	85338	85927		

S	SUPERSEDED		S
REEMPLAZADO / REMPLACE		REEMPLAZADO / REMPLACE	
Sell out / Vender / Épuisé	Then Use / Utilize / Utilisez alors	Sell out / Vender / Épuisé	Then Use / Utilize / Utilisez alors
83106	83136	85915	Obsolete
83121	83137	85922	85920
83132	83140	87000	85711
83205	83209	87001	85734
83218	83122	87002	85736
83310	83221	87003	85700
85044	85058	87004	85735
85048	83136	87006	85736
85049	85071	87011	85707
85325	83136	87012	85705
85326	85336	87013	85706
85328	83136	632155	646155

CHEVROLET TRUCK (Also see GMC Truck)

		OEM #	Gabriel #
	Bruin Tractors with J9 Cabs with Link Cabmate Model GMC92J9	1202-0012	**83023**
1990-	Kodiak Truck Cabs with Link Cabmate Model GMC104TK	1202-0054	**83021**
-1989	Kodiak Truck Cabs with Link Cabmate Model GMC92TK	1202-0012	**83023**
	Titan Cabover (Sleeper & Non-Sleeper Trucks) with Link Cabmate Model GMC-2P-A	1202-0032	**83016**

FORD

	8500 & 9500 Series with 113" & 122" BBC Conventional Tractors with Link Cabmate Models FH1322 & FH1322-A	1202-1043	**83025**
	CL9000 & CLT9000 Cabover Tractors (Sleeper & Non-Sleeper) with Link Cabmate Model FCL110-2P	1202-0032	**83016**
	Conventional Tractors - L, LT, LN, LNT 800, 8000, 9000 Series, LTS, LS 8000, 9000 Series, & LTL, LL 9000 Series with Link Cabmate Model FN89-A	1202-0012	**83023**
	L Series Conventional Tractors (All with 60" Able Body Sleepers) with Link Bunkmate Models FAS60-A & FAS60-AS	1202-1044	**83025**
	L8501 & L9501 Series with 101" BBC Conventional Tractors with Link Cabmate Model FH101	1202-1043	**83025**

AeroMax Series

	9500 Series with O.E.M. Number	F6HZ-5K407-AB	**83034**
		F6HZ-5K407-BA	**83033**
		F8HT-5K407-AA	**83033**
	Models with Link Cab Suspension	1202-0012	**83023**
		1202-0032	**83016**
		1202-0042	**83025**
		1202-0043	**83032**

FREIGHTLINER

	60" Sleeper models with Link Bunkmate Model FRTS60-A	1202-1043	**83025**
	Cabover Tractors with the rear cab mounts having a center to center measurement of 50" or 54" & with Link Cabmate Models FRT50-2P-C	1202-0054	**83021**
1997-	FL112 Business Class Day Cab Conventional Tractors with Link Cabmate Model FRT112DC	1202-1044	**83025**
	Models with Link Cab Suspension	1202-0042	**83025**
		1202-0043	**83032**
		1202-0044	**83025**
	Models with O.E.M. Number	18-32999-000	**83001**
		18-41762-002	**83038**
		18-44321-000	**83009**
		18-45067-000	**83034**

Business Class FL 60, 70, 80 & 106 Series - Conventional Truck & Tractor

	FL60, 70 Series	18-30378	**83006**
1991-	Trucks with crew cabs with Link Cabmate Model FRT153BC-A	1202-0054	**83021**
1991-	Trucks with Link Cabmate Models FRT106BC or FRT106HD-A	1202-0054	**83021**

Business Class M2

2002 & Up	Trucks with Air Spring Suspensions	18-47350-000	**83040**
2002 & Up	Trucks with Leaf Spring Suspensions	18-47349-000	**83039**

Century Class

	With Day-Cabs with O.E. Number	18-32999-001	**83006**
	With Sleeper-Cabs with O.E. Number	18-30378-000	**83001**
		18-32999-000	**83001**
	Models with O.E.M. Number	18-41762-000	**83038**

FREIGHTLINER... cont'd

Classic

		OEM #	Gabriel #
	Models with O.E.M. Number	18-29846-000	**83009**

Columbia

	Models with Sleeper Cab and O.E.M. Number	18-41762-000	**83038**
	Models with O.E.M. Number	18-29846-000	**83009**

FLA Series – COE Truck & Tractor

	COE Series	681-891-02-05	**83017**

FLB – COE Truck & Tractors

1993-	90", 100", & 110" Cabs with Link Cabmate Models FRT46-2P-A or FRT46-2P-B	1202-0054	**83021**
1984-	Cabover Tractors with 86", 96" & 104" Cabs with Link Cabmate Model FRT285	1202-0032	**83016**

FLC – 120 Conventional Tractors

1989-	Conventional Tractors with Link Cabmate Model FRTE120-A	1202-1043	**83025**
-Mar 1988	Conventional Tractors with Link Cabmate Model FRTC120-A	1202-0012	**83023**

FLD Series – 112 & 120 Conventional Truck & Tractor

Sept 1993-	64" Able Body Sleepers with Link Bunkmate Models FRTA64 or FRTAS64-A	1202-1044	**83025**
1989-	Conventional Tractors with Link Cabmate Model FRTE120-A	1202-1043	**83025**
	D2 Cab	18-41762-001	
	FL112 Daycab with Air Suspension	18-31476-000	**83020**
	FLD Sleeper with Air Suspension	18-29846-000	**83009**

GMC

	Astro Cabover (Sleeper & Non-Sleeper Trucks) with Link Cabmate Model GMC-2P-A	1202-0032	**83016**
	Brigadier Tractors with J9 Cabs with Link Cabmate Model GMC92J9	1202-0012	**83023**
1979-	Conventional Trucks measuring 108" BBC or 116" BBC with Link Cabmate Model GMC816	1202-0012	**83023**
1990-	TopKick Truck Cabs with Link Cabmate Model GMC104TK	1202-0054	**83021**
-1989	TopKick Truck Cabs with Link Cabmate Model GMC92TK	1202-0012	**83023**

INTERNATIONAL (NAVISTAR)

	4070B Cabover Tractors with 74", 84" or 88" cabs with Link Cabmate Model IHB-2P	1202-0032	**83016**
	4200 & 4300 Conventional Tractors with Link Cabmate Model IHC43	1202-0012	**83023**
Jan 1993-	48" & 60" Bentz Sleepers on 9000 Series Conventional Tractors with Link Cabmate Model IHS4860	1202-1044	**83025**
Mar 1997-	9100 & 9200 Series Conventionals with Link Cabmate Model ND92-A	1202-1043	**83025**
	9200 Series	2023684C1	**83015**
	9300 & 9400 Conventional Tractors with Link Cabmate Model IHC93-A	1202-1043 2503529C1	**83025** **83025**
1981-	9670 Cabover Tractors with 89" or 110" cabs with Link Cabmate Models IH967-A or IH97110	1202-0032	**83016**
1982-	9670, 9700 & 9800 Cabovers with 89" & 110" cabs with Link Cabmate Model NAV9876	1202-0054	**83021**
1989-	9700 Cabover Tractors with 110" cabs with Link Cabmate Model IH97110	1202-0032	**83016**
1989-	9700 Cabover Tractors with 89" cabs with Link Cabmate Model IH9789	1202-0032	**83016**

INTERNATIONAL (NAVISTAR)... cont'd

		OEM #	Gabriel #
	All Series with O.E. Number	2012769C2	**83005**
		2023684C1	**83015**
		2023685C1	**83015**
		2025790C1	**83013**
		2500013C1	**83013**
1997-	Eagle Pro-Sleeper	1202-0054	**83021**
	Models with Link Cab Suspension	1202-0012	**83023**
		1202-0032	**83016**
		1202-0042	**83025**
		1202-0043	**83032**
		1202-0044	**83025**
		1202-0054	**83021**
		1202-1212	**83013**
		1202-1213	**83005**
	Models with Link Cab Suspension NPS90	1202-0054	**83021**
-1991	Navistar 60" Sleepers with Link Cabmate Model IHS60	1202-1043	**83025**
	S2500, S2600, 8100, 8200, & 8300 Series Conventional Tractors with Link Cabmate Model NAV80	1202-1043	**83025**
	Selected Paystar Conventionals with Link Cabmate Models NP50 & NP50-A	1202-1044	**83025**
	Models with O.E.M. Number	2508326C1	**83021**
		2508327C1	**83025**
		1201-1043	**83025**
		1201-1049	**83025**

Fleetstar - Conventional

	1900A, 2000A Series	480945C1	**83014**
		480945C2	**83014**

KENWORTH

	32" Areocabs with Link Cabmate Model KWK1T03	1202-1264	**83031**
	60" Sleeper with Link Cab Suspension	1202-0043	**83032**
	62" Areocabs and 74" Sleepers with Link Cabmate Model KWK1T01	1202-1164	**83031**
	72" Areocabs with Link Cabmate Model KWK1T02	1202-1065	**83002**
	COE Models with Link Cab Model	KWE90112	**83016**
	COE Models with Link Cab Model (Does not fit Non-Sleeper cabs)	KW1102-B	**83016**
	COE Sleeper Cabs using the 3 point mount system with one hydraulic latch centered on the rear cab support & Link Cabmate Model KW1102-B.	1202-0032	**83016**
-1982	Conventional Tractors with A-Model cabs & Link Cabmate Model KWA900	1202-0012	**83023**
	Link Cabmate Model KWB500	1202-0044	**83025**
	Link Cabmate Model KWB689-B	1202-1043	**83025**
	Link Cabmate Model KWE90112-B	1202-1064	**83024**
	Mid-1986 and newer Kenworth Sleepers with round cornered doors & Link Bunkmate Model KWS60-A .	1202-0043	**83032**
	Models with Link Cab Suspension	1202-0042	**83025**
	Models with Link Cab Suspension KWE90112-A	1202-0032	**83016**
	Models with Link Cab Suspension KWMC642	1202-0054	**83021**
	T2000 Conventional Models with Link Cabmate Model KWT2000	1202-1064	**83024**
	T-2000 with PowerPacker Cab Suspension after 6/28/98	PP2582.870	**83012**
	T-2000 with PowerPacker Cab Suspension prior to 6/28/98	96027.10545	**83011**
-May 1992	T-400A & T-450 Conventional Tractors with Link Cabmate Model KWB400-A	1202-0012	**83023**
June 1992-	T-400A & T-450 Conventional Tractors with rear cab support Kenworth P/N K235-1646 & Link Cabmate Model KWB689-A	1202-0012	**83023**
	T-600A, T-800A & W-900B Conventional Tractors with rear cab support Kenworth P/N K235-1436 or K235-1488 with Link Cabmate Model KWB689-A	1202-0012	**83023**

LINK MANUFACTURING

		OEM #	Gabriel #
	Models with Link Cab Suspension	1202-0012	**83023**
		1202-0032	**83016**
		1202-0042	**83025**
		1202-0043	**83032**
		1202-0044	**83025**
		1202-0054	**83021**
		1202-1042	**83025**
		1202-1043	**83025**
		1202-1044	**83025**
		1202-1064	**83024**
		1202-1065	**83002**
		1202-1164	**83031**
		1202-1212	**83013**
		1202-1213	**83005**
		LG40450	**83016**
		LG40470	**83016**

MACK

	CH Series	14QK-411	**83007**
		14QK-411M	**83007**
	CL Series	14QK-391AM,AM2	**83041**
	MH Series with Air Cab	14QK-376	**83003**
	Models with Link Cab Suspension	1202-0012	**83023**
		1202-0032	**83016**
	R 600 Tractors with Link Cabmate Model MCR600	1202-0012	**83023**
	R, RD Series	14QK-382	**83018**
		14QK-382-P2	**83018**
	R, RD400 & 600 Series with Cab Air suspension	14QK-2111-P4	**83019**
	RS & Superliner Tractors with Link Cabmate Model MCRS600	1202-0012	**83023**
	RW Series	14QK-29303-P2	**83014**
	Models with O.E.M. Numbers	14QK-2111	**83019**
		14QK-2111-P2	**83019**
		14QK-391BM	**83041**

MARMON

1981-	Conventional Tractors with Link Cabmate Model MARC57-B	1202-0054	**83021**

PETERBILT

	357, 375, 376, 377 & 378 Conventional Truck & Tractors with Link Cabmate Models PBC377 & PBC377-A	1202-0054	**83021**
	359 & 379 Conventional Truck & Tractors with Link Cabmate Models PBC379 & PBC379-A	1202-0054	**83021**
	359 Series (Older Models) Conventional Tractors with Link Cabmate Model PBCAL359	1202-0012	**83023**
1981-	362 Cabovers with Link Cabmate Model PB-362-2P	1202-0032	**83016**
	362 COE Cab Suspension	20-18744	**.....**
	377 & 379 Conventional Models with Unibuilt Cab	29-02455	**83008**
1999-	387 Series with O.E.M. Number	29-06005	**83035**
		29-06032	**83035**
1978-	48" Sleepers with Link Bunkmate Model PBS48-A	1202-1044	**83025**
1978-	63" Sleepers with Link Bunkmate Model PBS63-A	1202-1044	**83025**
	Day Cab Suspensions with O.E.M. Number	20-16755	**83042**
	Models with PowerPacker Cab Suspension	96027.1054	**83011**
		PP2582.870	**83012**
	Models with O.E.M. Number	29-02455	**83008**

STERLING

		OEM #	Gabriel #
	AT-9500 Series with O.E.M. Number	F6HZ-5K407-BA	**83033**
		F8HT-5K407-AA	**83033**
	LT-9500 Series with O.E.M. Number	F6HZ-5K407-AB	**83034**
	Models with O.E.M. Numbers	18-45067-000	**83034**

VOLVO

	Aero Series (WCA & WIA Models)	8162662	**83004**
		66010-0007	**83004**
		66010-0008	**83004**
	Link Cabmate Model WRC-2P	1202-0032	**83016**
	VN Series - Horizontal Position	8078547	**83029**
	VN Series - Vertical Position	8078546	**83028**
	WG Conventional Tractors with 112" cabs with Link Cabmate Model WWG112-A	1202-0012	**83023**
	Models with O.E.M. Numbers	8168617	**83030**

WESTERN STAR

	6900 Series	725470	**83010**
	Constellation Day Cab Models	66010-3405	**83026**
	Constellation Sleeper Cab Models	66010-3406	**83027**
1986-	Conventional Tractors with Link Cabmate Model WSC4000	1202-0012	**83023**
	Heritage Constellation models	66010-3404	**83022**
	Models with Link Cab Suspension	1202-0032	**83016**

SHOCKS FOR SPECIAL APPLICATIONS

AMORTIGUADORES PARA APLICACIONES ESPECIALES

AMORTISSEURS POUR USAGES PARTICULIERS

CHALLENGE

Cement Mixer	1540459 632147 632155	**630811** **632147** **632155**

HENDRICKSON SUSPENSION

Auxiliary Liftable Steerable System (HL)

HLP Paralift	A-14496	**632155**
HLU Paralift Ultra	A-14496	**632155**

INGERSALL MACHINE

700060-0 Axle Assy.	665472	**665472**
Models with O.E.M. Number	665904	**665472**

LINK/HIGH-STEER

6000 Steering Stabilizer	632155	**632155**
9000 Steering Stabilizer	1210-0007	**665937**

MC NEILUS TRUCK & MAN. COMPANY

Booster Axles	600.115994B	**632147**
Pusher Axles	600.115994B	**632147**
Models with O.E.M. Number	600.11599C	**630811**

NEWAY SUSPENSION SYSTEMS

Neway V-Steer II

Self - Steering Axle Shocks	632155	**632155**

REYCO/GRANNING

L132 Steering Stabilizer	701071-01	**665937**

REX

Cement Mixer	102-31602-01	**630811**

RIDEWELL CORP.

RLT-230	1310002	**665937**
RSS-236/R	1310002	**665937**

SPRING VALLEY

SS120 Steering Stabilizer	632155	**632155**
SS130L Steering Stabilizer	632155	**632155**

SUSPENSIONS INC.

LP11 Steerable Lift Axle	200188	**632155**

WATSON & CHALIN MFG. INC.

Self - Steering Axle Suspension Systems

LW5L-1100 SR	11418	**646155**
WCAL-1000 SST	11418	**646155**
WCAL-1100 LR	11418	**646155**
WCAL-1100 SR	11418	**646155**
WCAL-1100 SRLP	11418	**646155**
WCAL-1100 SSR	11418	**646155**
WCHL-1100 FL	11418	**646155**
WCHL-1100 HI-LIFT	11418	**646155**

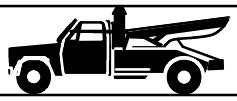

		Front Delantero Avant	Rear Trasero Arrière

ACURA

SLX

96-99	4 W.D.	**G60250**	**G60251**

ASUNA (Canadian Vehicle)

SUNRUNNER

92-94	Left Side	**.....**	**G61140**
92-94	Right Side	**.....**	**G61140**

BUICK

RAINER

04-05	All	**.....**	**G61175**

RENDEZVOUS

02-05	All w/All Wheel Drive	**.....**	**G61868**
02-05	All w/Front Wheel Drive	**.....**	**G61869**

CADILLAC

ESCALADE 2 W.D.

99-00	All	**G60163**	**G60196**

ESCALADE 4 W.D. & AWD

99-00	All	**G60163**	**G60196**

CHEVROLET

ASTRO VAN

90-05	2 W.D.	**G60076** [12]	**G60077**
90-05	4 W.D.	**G61159**	**G60077**
85-89	2 W.D.	**G60076** [12]	**G60077**

AVALANCHE 1500

02-05	All (Exc. Electronic Suspension)	**G61144**	**G61866**

AVALANCHE 2500

02-05	All (Exc. Electronic Suspension)	**G61158**	**G61866**

BLAZER

92-94	4 W.D.	**G60163**	**G60196**
81-91	4 W.D. Quad Suspension (Exc. Lift Kit) Long Shock Front (2 req'd.)	**G60307** [30]	**.....**
81-91	4 W.D. Quad Suspension (Exc. Lift Kit) Rear	**.....**	**G60010**
81-91	4 W.D. Quad Suspension (Exc. Lift Kit) Short Shock Front (2 req'd.)	**G60309** [30]	**.....**
73-91	4 W.D. (Exc. Quad Suspension & Lift Kit)	**G60008**	**G60010**
73-90	4 W.D. w/4" Lift Kit (Exc. Quad Suspension)	**G60064** [31]	**G60065** [31]
73-83	2 W.D.	**G60014**	**G60010**
71-72	4 W.D.	**G60008**	**G60045**
69-72	All 2 W.D. w/Rear Coil Springs	**G60014**	**.....**
69-72	All 2 W.D. w/Rear Leaf Springs	**G60014**	**G60021**
69-70	4 W.D.	**G60008**	**.....**

[12] Use Kit No. 140719 to replace original equipment hardware for lower shock absorber mounting when studs break or self-tapping screws are no longer useable. / Usar el juego nº 140719 para cambiar los components originales del soporte inferior del amortiguador cuando se rompan los pernos o ya no se puedan usar los tornillos autorroscantes. / Utiliser le kit nº 140719 pour remplacer l'équipement original de l'amortisseur inférieur lorsque les ouvertures de goujon ou les vis auto-réglables ne peuvent plus être utilisées.

[30] It is recommended that when replacing front shocks on vehicles with "quad shocks" option, all four shocks should match by series. / Cuando se reemplacen los amortiguadores delanteros de los vehiculos con la opción amortiguadores «Quad», se recomenda que los cuatro amortiguadores sean de la misma serie. / Lorsque les amortisseurs avant sont remplacés sur les véhicules avec amortisseurs «Quad», les quatre amortisseurs doivent être de la mèmem série.

[31] Bellows Kit No. 141242 is recommended for use to protect piston rod from potentially harmful road debris. / El juego de fuelles No. 141242 es recomendado para proteger al vástago del pistón contra desechos de la carretera potencialmente dañinos. / Nécessaire de soufflets no 141242 recommandé pour protéger la tige de piston des débris de la route.

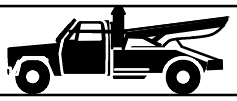

CHEVROLET (cont'd)

COLORADO

		Front Delantero Avant	Rear Trasero Arrière
04-06	2 W.D w/ Z71 Off Road Package	.....	**G61879**
04-06	2 W.D. (Exc. Z71 Off Road Package)	.....	**G61882**
04-06	4 W.D.	.....	**G61879**
04-06	All	**G61884**	.....
1/2 TON PICKUP 2 W.D. (C, R & SILVERADO MODELS)			
99-05	Silverado 1500 (Exc. HD Crew Cab & Adj. Suspension)	**G61124**	**G60206**
99-05	Silverado 1500 HD Crew Cab	**G61158**	**G60218**
88-99	Exc. 1999 Silverado	**G60098**	**G60097**
73-87	All	**G60014**	**G60010**
67-72	Rear Coil Springs	**G60014**	.....
67-72	Rear Leaf Springs	**G60014**	**G60021**
63-66	All	**G60014**	**G60021**
3/4 TON PICKUP 2 W.D. (C, R & SILVERADO MODELS)			
99-05	Silverado 2500	**G61158**	**G60218**
88-00	C2500 Series	**G60098**	**G60097**
73-89	C20, R20, R2500 Crew Cab & Bonus Cab	**G60014**	**G60044**
73-89	C20, R20, R2500 Exc. Crew Cab & Bonus Cab	**G60014**	**G60010**
67-72	w/Rear Coil Springs	**G60014**	.....
67-72	w/Rear Leaf Springs	**G60014**	**G60021**
63-66	All	**G60014**	**G60021**
1 TON PICKUP 2 W.D. (C, R & SILVERADO MODELS)			
01-05	Silverado 3500	**G61158**	**G60218**
91-03	C3500 HD w/Solid Front Axle	**G61153**	**G60097**
88-00	C3500 Exc. HD w/Straight Front Axle	**G60098**	**G60097**
88-91	C3500 Pickup Crew Cab; Cab/Chassis models	**G60014**	**G60044**
73-91	C30, R30, R3500	**G60014**	**G60044**
67-72	11,000 lb. Rear Axle	**G60014**	.....
67-72	Exc. 11,000 lb. Rear Axle	**G60014**	**G60021**
63-66	All	**G60014**	.....
1/2 TON PICKUP 4 W.D. (K, V & SILVERADO MODELS)			
99-05	Silverado 1500 (Exc. HD Crew Cab & Adj. Suspension)	**G61144**	**G60218**
01-03	Silverado 1500 HD Crew Cab	**G61158**	**G60218**
88-99	Exc. 1999 Silverado	**G61159**	**G60097**
81-87	Quad Suspension (Exc. w/Lift Kit) Long Shock Front (2 req'd.)	**G60307** [30]	.....
81-87	Quad Suspension (Exc. w/Lift Kit) Rear	.....	**G60010**
81-87	Quad Suspension (Exc. w/Lift Kit) Short Shock Front (2 req'd.)	**G60309** [30]	.....
73-87	All (Exc. Quad Suspension & Lift Kit)	**G60008**	**G60010**
73-87	All w/4" Lift Kit (Exc. Quad Suspension)	**G60064** [31]	**G60065** [31]
71-72	All	**G60008**	**G60045**
69-70		**G60008**	.....
3/4 TON PICKUP 4 W.D. (K, V & SILVERADO MODELS)			
99-05	Silverado 2500	**G61158**	**G60218**
88-00	K2500	**G60163**	**G60097**
81-87	Quad Suspension (Exc. w/Lift Kit) Long Shock Front (2 req'd.)	**G60307** [30]	.....
81-87	Quad Suspension (Exc. w/Lift Kit) Rear	.....	**G60010**

[30] It is recommended that when replacing front shocks on vehicles with "quad shocks" option, all four shocks should match by series. / Cuando se reemplacen los amortiguadores delanteros de los vehiculos con la opción amortiguadores «Quad», se recomenda que los cuatro amortiguadores sean de la misma serie. / Lorsque les amortisseurs avant sont remplacés sur les véhicules avec amortisseurs «Quad», les quatre amortisseurs doivent être de la mèmem série.

[31] Bellows Kit No. 141242 is recommended for use to protect piston rod from potentially harmful road debris. / El juego de fuelles No. 141242 es recomendado para proteger al vástago del pistón contra desechos de la carretera potencialmente dañinos. / Nécessaire de soufflets no 141242 recommandé pour protéger la tige de piston des débris de la route.

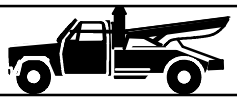

CHEVROLET (cont'd)

		Front Delantero Avant	Rear Trasero Arrière
81-87	Quad Suspension (Exc. w/Lift Kit) Short Shock Front (2 req'd.)	**G60309** [30]	**.....**
73-87	All (Exc. Quad Suspension & Lift Kit)	**G60008**	**G60010**
73-87	All w/4" Lift Kit (Exc. Quad Suspension)	**G60064** [31]	**G60065** [31]
71-72	All	**G60008**	**G60045**
69-70		**G60008**	**.....**
1 TON PICKUP 4 W.D. (K, V & SILVERADO MODELS)			
01-05	Silverado 3500	**G61158**	**G60218**
88-00	K3500	**G60163**	**G60097**
89-91	R3500 Pickup Crew Cab & Cab/Chassis	**G60112**	**G60218**
77-88	K3500 (77-86) R3500 (87-88)	**G60112**	**G60218**
1/2 TON SUBURBAN 2 W.D. (C & R MODELS)			
00-06	All (Exc. Z55 AutoRide Suspension)	**G61144**	**G61866**
92-99	All	**G60098**	**G60196**
73-91		**G60014**	**G60010**
68-72		**G60014**	**.....**
67	w/Rear Coil Springs	**G60014**	**.....**
63-66	All	**G60014**	**G60021**
3/4 TON SUBURBAN 2 W.D. (C & R MODELS)			
00-06	All (Exc. Z55 AutoRide Suspension)	**G61158**	**G61866**
92-99	All	**G60098**	**G60196**
73-91		**G60014**	**G60010**
68-72		**G60014**	**.....**
67	w/Rear Coil Springs	**G60014**	**.....**
63-66	All	**G60014**	**G60021**
1/2 TON SUBURBAN 4 W.D. (K & V MODELS)			
00-06	All (Exc. Z55 AutoRide Suspension)	**G61144**	**G61866**
92-99	All	**G60163**	**G60196**
81-91	Quad Suspension (Exc. w/Lift Kit) Long Shock Front (2 req'd.)	**G60307** [30]	**.....**
81-91	Quad Suspension (Exc. w/Lift Kit) Rear	**.....**	**G60010**
81-91	Quad Suspension (Exc. w/Lift Kit) Short Shock Front (2 req'd.)	**G60309** [30]	**.....**
73-91	All (Exc. Quad Suspension & Lift Kit)	**G60008**	**G60010**
73-91	All w/4" Lift Kit (Exc. Quad Suspension)	**G60064** [31]	**G60065** [31]
71-72	All	**G60008**	**G60045**
69-70		**G60008**	**.....**
3/4 TON SUBURBAN 4 W.D. (K & V MODELS)			
00-06	All (Exc. Z55 AutoRide Suspension)	**G61158**	**G61866**
92-99	All	**G60163**	**G60196**
81-91	Quad Suspension (Exc. w/Lift Kit) Long Shock Front (2 req'd.)	**G60307** [30]	**.....**
81-91	Quad Suspension (Exc. w/Lift Kit) Rear	**.....**	**G60010**
81-91	Quad Suspension (Exc. w/Lift Kit) Short Shock Front (2 req'd.)	**G60309** [30]	**.....**
73-91	All (Exc. Quad Suspension & Lift Kit)	**G60008**	**G60010**
73-91	All w/4" Lift Kit (Exc. Quad Suspension)	**G60064** [31]	**G60065** [31]
71-72	All	**G60008**	**G60045**
69-70		**G60008**	**.....**

[30] It is recommended that when replacing front shocks on vehicles with "quad shocks" option, all four shocks should match by series. / Cuando se reemplacen los amortiguadores delanteros de los vehiculos con la opción amortiguadores «Quad», se recomenda que los cuatro amortiguadores sean de la misma serie. / Lorsque les amortisseurs avant sont remplacés sur les véhicules avec amortisseurs «Quad», les quatre amortisseurs doivent être de la mèmem série.

[31] Bellows Kit No. 141242 is recommended for use to protect piston rod from potentially harmful road debris. / El juego de fuelles No. 141242 es recomendado para proteger al vástago del pistón contra desechos de la carretera potencialmente dañinos. / Nécessaire de soufflets no 141242 recommandé pour protéger la tige de piston des débris de la route.

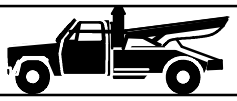

CHEVROLET (cont'd)

1/2 TON VAN (EXPRESS & G MODELS)

		Front Delantero Avant	Rear Trasero Arrière
96-02	All	G60076 [12]	G60196
78-95		G60015	G60039
71-77		G60015	G60021
70	All w/I-Beam Front Axle	.....	G60021
70	All w/Independent Front Suspension	G60015	G60021
67-69	All	.....	G60021

3/4 TON VAN (EXPRESS & G MODELS)

96-02	All (Exc. 8600 GVW)	G60076 [12]	G60196
78-95		G60015	G60039
71-77	All	G60015	G60021
70	All w/I-Beam Front Axle	.....	G60021
70	All w/Independent Front Suspension	G60015	G60021
67-69	All	.....	G60021

1 TON VAN (EXPRESS & G MODELS)

97-02	All	G60076 [12]	G60196
92-96	All w/7100# (w/Chassis Cab), 7400#, 8600# GVW	G60015	G60214
85-91	Exc. 7100# w/Chassis Cab, 7400#, & 8600# GVW	G60015	G60039
79-84	With 9200# GVW	G60015	G60111
78-84	Exc. 7100# w/Chassis Cab, 7400#, & 8600# GVW	G60015	G60039
75-77	All w/146" Wheelbase	G60015	.....
71-74	Exc. w/146" Wheelbase	G60015	G60021

LUMINA (APV VAN)

90-96	All	.....	G60312

LUV PICKUP

81-82	2 W.D.	G60303	G60101
81-82	4 W.D.	G60310	G60101
79-80	2 W.D.	G60310	G60308
79-80	4 W.D.	G60310	G60308
72-78	All	G60310	G60308

P MODELS FORWARD CONTROL

86-99	All Motorhome Chassis w/I-Beam Front Suspension	G60185	G60044
85-99	All Motorhome Chassis w/Independent Front Suspension	G60113	G60044
73-90	All (Exc. Motorhome Chassis)	G60014	G60044
79-89	P20	G60014	G60044
85	All Motorhome Chassis w/I-Beam Front Suspension	G60111	G60044
74-84	All Motorhome Chassis	G60113	G60044
74-84	P10	G60014	G60044
73-78	P20	G60014	G60010
73	P10	G60014	G60010
68-72	11,000 lb. Rear Axle	G60014	.....
68-72	Exc. 11,000 lb. Rear Axle	G60014	G60021
68-72	P10	G60014	.....
68-72	P20	G60014	G60021
67	P10	G60014	.....
63-66		G60014	G60021

[12] Use Kit No. 140719 to replace original equipment hardware for lower shock absorber mounting when studs break or self-tapping screws are no longer useable. / Usar el juego nº 140719 para cambiar los components originales del soporte inferior del amortiguador cuando se rompan los pernos o ya no se puedan usar los tornillos autorroscantes. / Utiliser le kit nº 140719 pour remplacer l'équipement original de l'amortisseur inférieur lorsque les ouvertures de goujon ou les vis auto-réglables ne peuvent plus être utilisées.

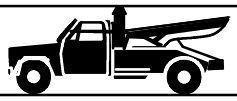

		Front Delantero Avant	Rear Trasero Arrière

CHEVROLET (cont'd)

S SERIES--PICKUP

83-04	4 W.D. (Exc. ZR2)	**G60051**	**G60050**
82-04	2 W.D. (Exc. Sport Chassis)	**G60049**	**G60050**

S10 BLAZER

83-05	2 W.D.	**G60049**	**G60050**
83-05	4 W.D. (Exc. ZR2)	**G60051**	**G60050**

TAHOE

01-06	All (Exc. Z55 AutoRide Suspension)	**G61144**	**G61866**
00	2 W.D. Old Body Style	**G60098**	**G60196**
00	4 W.D. Old Body Style	**G60163**	**G60196**
00	All New Body Style (Exc. Z55 AutoRide Suspension)	**G61144**	**G61866**
95-99	2 W.D.	**G60098**	**G60196**
95-99	4 W.D.	**G60163**	**G60196**

TRACKER

98-03	All (Exc. ABS)	**.....**	**G61140**

TRAILBLAZER

02-05	All	**.....**	**G61175**

TRUCK

55-56	3100, 3124 (2nd Series 1955)	**G60031**	**.....**
55-56	3200, 3600 (2nd Series 1955)	**G60031**	**.....**
55-56	3800 (2nd Series 1955)	**G60031**	**.....**

VENTURE

97-05	All	**.....**	**G61116**

CHRYSLER

TOWN & COUNTRY

01-05	(Exc. ABS and Nivomat Self-Leveling Option)	**.....**	**G60233** [8,9]
01-05	All w/ ABS (Exc. Nivomat Self-Leveling Option)	**.....**	**G60233** [8,9]
96-00	(Exc. ABS and Nivomat Self-Leveling Option)	**.....**	**G60233**
96-00	All w/ABS (Exc. Nivomat Self-Leveling Option)	**.....**	**G60233** [8,9]
90-95	All	**.....**	**G60062**

VOYAGER

01-03	All w/ ABS (Exc. Nivomat Self-Leveling Option)	**.....**	**G60233** [8,9]
00-03	(Exc. ABS and Nivomat Self-Leveling Option)	**.....**	**G60233** [8,9]

DAIHATSU

ROCKY

90-92	All	**G60165**	**.....**

DODGE

1/2 TON PICKUP 2 W.D.

02-05	All RAM 1500	**G61958**	**G60218**
94-01		**G60205**	**G60206**
77-93	All D150	**G60017** [10]	**G60012**
72-89	All D100	**G60017** [10]	**G60012**

8 Also works as conventional type replacement for Nivomat Suspension. / Conviene también como recambio habitual para los sistemas de suspensión Nivomat. / Convient aussi comme pièce de recharge habituelle pour les systèmes de suspension Nivomat.

9 If suspension spring contacts this unit, rotate suspension spring 180 degrees. / Si el resorte de suspensión entra en contacto con la unidad, rote el resorte de suspensión 180 grados. / Si le ressort de suspension entre en contact avec l'unité, faire pivoter le ressort de 180 degrees.

10 Slight grinding of control arm opening is required to install product made before August, 1988. / Un pequeño lijado de ajuste a la abertura del brazo de control es requerido para instalar productos fabricados antes de agosto 1988. / Un usinage mineur de l'ouverture de la bielle de poussée est nécessaire pour installer les pièces fabriquées avant août 1988.

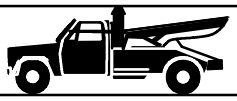

DODGE (cont'd)

3/4 TON PICKUP 2 W.D.

		Front Delantero Avant	Rear Trasero Arrière
90-93	All D250 (Exc. Heavy Duty Package)	G60017 [10]	G60012
90-93	All D250 w/Heavy Duty Package	G60043 [10]	G60012
84-89		G60043 [10]	G60012
81-89	All D250 (Exc. Heavy Duty Package)	G60017 [10]	G60012
81-83	All D250 w/Heavy Duty Package	G60043 [10]	G60012
72-80	All D200 (Exc. Heavy Duty Package)	G60017 [10]	G60012
72-80	All D200 w/Heavy Duty Package	G60043 [10]	G60012
94-02	All RAM 2500	G60205	G60206

1 TON PICKUP 2 W.D.

94-02	All RAM 3500 (Exc. w/ Solid Front Axle)	G60205	G60206
94-02	All RAM 3500 w/ Solid Front Axle	G60217	G60218
84-93	All D350	G60043 [10]	G60012
81-83		G60043 [10]	G60012
72-80	All D300	G60043 [10]	G60012

1/2 TON PICKUP 4 W.D.

02-05	All RAM 1500	G61182	G60218
94-01		G60216	G60206
81-93	All W150 (Exc. Lift Kit)	G60028	G60029
86-89	All W100 (Exc. Lift Kit)	G60028	G60029
72-85	All W100	G60028	G60029
77-80	All W150	G60028	G60029
68-71	All W100	G60028	.....
61-67	All W100	G60028	.....

3/4 TON PICKUP 4 W.D.

94-02	All RAM 2500 (Exc. 8800 GVW or Diesel)	G60216	G60206
94-02	All RAM 2500 (w/8800 GVW or Diesel)	G60217	G60218
81-93	All W250 (Exc. Crew Cab & Lift Kit)	G60028	G60029
72-80	All W200	G60028	G60029
61-71		G60028	.....

1 TON PICKUP 4 W.D.

94-02	All RAM 3500	G60217	G60218
81-93	All W350 (Exc. Quad Shock & Lift Kit)	G60028	G60029
72-80	All W300	G60028	G60029
61-71		G60028	G60028

1/2 TON VAN

99-03	All RAM 1500 (Exc. 127" Wheelbase & 7000 lb. GVW)	G60017 [10]	G60039
95-98	All B1500 (Exc. 127" Wheelbase & 7000 lb. GVW)	G60017 [10]	G60039
81-94	All B150 (Exc. 127" Wheelbase & 7000 lb. GVW)	G60017 [10]	G60039
71-80	All B100	G60017 [10]	G60039

3/4 TON VAN

99-03	All RAM 2500	G60017 [10]	G60039
95-98	All B2500	G60017 [10]	G60039
81-94	All B250	G60017 [10]	G60039
71-80	All B200	G60017 [10]	G60039

1 TON VAN

99-03	All RAM 3500 (Exc. B3500 w/4000 lb. Front Axle)	G60017 [10]	G60039
95-98	All B3500 (Exc. B3500 w/4000 lb. Front Axle)	G60017 [10]	G60039
81-94	All B350 (Exc. B-350 w/4000 lb. Front Axle)	G60017 [10]	G60039

[10] Slight grinding of control arm opening is required to install product made before August, 1988. / Un pequeño lijado de ajuste a la abertura del brazo de control es requerido para instalar productos fabricados antes de agosto 1988. / Un usinage mineur de l'ouverture de la bielle de poussée est nécessaire pour installer les pièces fabriquées avant août 1988.

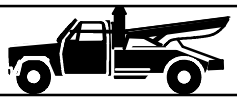

DODGE (cont'd)

		Front Delantero Avant	Rear Trasero Arrière
81-93	All B350 w/4000 lb. Front Axle	**G60043** [10]	**G60039**
71-80	All B300 (Exc. B-300 w/4000 lb. Front Axle)	**G60017** [10]	**G60039**
71-80	All B300 w/4000 lb. Front Axle	**G60043** [10]	**G60039**
CARAVAN			
01-05	(Exc. ABS and Nivomat Self-Leveling Option)	**.....**	**G60233** [8,9]
01-05	All w/ ABS (Exc. Nivomat Self-Leveling Option)	**.....**	**G60233** [8,9]
96-00	(Exc. ABS and Nivomat Self-Leveling Option)	**.....**	**G60233** [8,9]
96-00	All w/ ABS (Exc. Nivomat Self-Leveling Option)	**.....**	**G60233** [8,9]
86-95	All Mfg. after 1/2/86	**.....**	**G60062**
84-86	All Mfg. to 1/2/86	**.....**	**G60062**
CB & MB SERIES--COMPACT FRONT SECTION			
81-93	MB-300, MB-350, BF-300, BF-350 (Exc. w/4000 lb. Front Axle)	**G60017** [10]	**G60039**
81-93	MB-300, MB-350, BF-300, BF-350 w/4000 lb. Front Axle	**G60043** [10]	**G60039**
CB300			
78-80	CB-300, MB-300 (Exc. w/4000 Lb Front Axle)	**G60017** [10]	**G60039**
78-80	CB-300, MB-300 w/4000 lb Front Axle	**G60043** [10]	**G60039**
78-80	CB-400, MB-400	**G60043** [10]	**G60039**
70-77	CB-300, MB-300 w/GVW over 8,300 lb.	**G60043** [10]	**G60039**
70-77	CB-300, MB-300 w/GVW up to 8,300 lb.	**G60017** [10]	**G60039**
D50 PICKUP			
82	4 W.D.	**G60074**	**G60075**
79-82	2 W.D.	**G60354**	**G60308**
DAKOTA			
97-04	2WD	**G60313**	**G60111**
97-04	4WD	**G60306**	**G60111**
87-96	2WD	**G60313**	**G60083**
87-96	4WD	**G60306**	**G60110**
DURANGO			
99-03	2WD	**G60313**	**G60111**
98-03	4WD	**G60306**	**G60111**
M & RM SERIES--MOTORHOME CHASSIS			
78-81	M-300, M-400, M-500 & M-600	**G60119**	**G60028**
75-77	M-300 (M3), M-400 (M4) & M-500 (M5)	**G60119**	**.....**
M300			
74	RM-300 (R3), RM-350 (R4) & RM-400 (R5)	**G60119**	**.....**
M350			
74	RM-300 (R3), RM-350 (R4) & RM-400 (R5)	**G60119**	**.....**
RAIDER 4 W.D.			
89	All w/ V6	**G60074**	**G60152**
87-89	All w/4 cyl.	**G60074**	**G60101**
RAM 50			
82-93	4 W.D.	**G60074**	**G60075**
81-93	2 W.D.	**G60354**	**G60308**

8 Also works as conventional type replacement for Nivomat Suspension. / Conviene también como recambio habitual para los sistemas de suspensión Nivomat. / Convient aussi comme pièce de recharge habituelle pour les systèmes de suspension Nivomat.

9 If suspension spring contacts this unit, rotate suspension spring 180 degrees. / Si el resorte de suspensión entra en contacto con la unidad, rote el resorte de suspensión 180 grados. / Si le ressort de suspension entre en contact avec l'unité, faire pivoter le ressort de 180 degrees.

10 Slight grinding of control arm opening is required to install product made before August, 1988. / Un pequeño lijado de ajuste a la abertura del brazo de control es requerido para instalar productos fabricados antes de agosto 1988. / Un usinage mineur de l'ouverture de la bielle de poussée est nécessaire pour installer les pièces fabriquées avant août 1988.

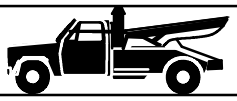

		Front Delantero Avant	Rear Trasero Arrière

DODGE (cont'd)

RAMCHARGER 2 W.D.

75-93	All	**G60017**	**G60012**

RAMCHARGER 4 W.D.

76-93	All	**G60028**	**G60029**
74-75		**G60028**	**G60012**

RD MODELS

78-80	RD 200	**G60028**	**.....**

FORD

AEROSTAR

90-97	4 W.D.	**G60181**	**G60120**
89-97	2 W.D.	**G60078**	**G60120**
86-88	All	**G60078**	**G60099**

BRONCO

80-96	All (Exc. Quad Suspension & Lift Kit)	**G60038**	**G60035**
80-96	Quad Suspension (Exc. Lift Kit) Forward of Front Axle (2 req'd.)	**G60033**	**.....**
80-96	Quad Suspension (Exc. Lift Kit) Rear	**.....**	**G60035**
80-96	Quad Suspension (Exc. Lift Kit) Rearward of Front Axle (2 req'd.)	**G60038**	**.....**
87-88	All w/3-4" Lift Kit	**.....**	**G60068** [31]
80-86	All w/3-4" Lift Kit (Exc. Quad Suspension, Bronco II)	**G60071** [31]	**G60068** [31]
80-85	All w/3-4" Lift Kit (Quad Suspension) Forward of Front Axle (2 req'd.)	**G60072** [31]	**.....**
80-85	All w/3-4" Lift Kit (Quad Suspension) Rear	**.....**	**G60068** [31]
80-85	All w/3-4" Lift Kit (Quad Suspension) Rearward of Front Axle (2 Req'd.)	**G60071** [31]	**.....**
78-79	All w/3 1/2-4" Lift Kit (Exc. Quad Suspension) Left Front	**G60073** [31]	**.....**
78-79	All w/3 1/2-4" Lift Kit (Exc. Quad Suspension) Rear	**.....**	**G60068** [31]
78-79	All w/3 1/2-4" Lift Kit (Exc. Quad Suspension) Right Front	**G60071** [31]	**.....**
78-79	Quad Suspension (Exc. Lift Kit) Forward of Front Axle (2 req'd.)	**G60129**	**.....**
78-79	Quad Suspension (Exc. Lift Kit) Rear	**.....**	**G60042**
78-79	Quad Suspension (Exc. Lift Kit) Rearward of Front Axle (2 req'd.)	**G60026**	**.....**
78-79	Std. Suspension (Exc. Lift Kit) Left Front	**G60129**	**.....**
78-79	Std. Suspension (Exc. Lift Kit) Rear	**.....**	**G60042**
78-79	Std. Suspension (Exc. Lift Kit) Right Front	**G60026**	**.....**
66-77	All From Serial #830001 (Exc. Lift Kit)	**G60023**	**G60042**
66-77	All w/4-5" Lift Kit	**G60071** [31]	**G60068** [31]
66	All (Thru Serial #830000)	**G60023**	**G60011**

BRONCO II

90	All	**G60171**	**G60144**
89	All built from 2/89 (Vehicles w/12mm bolt in rear lower mount)	**G60038**	**G60144**
84-89	All built until 1/89 (Vehicles w/10mm bolt in rear lower mount)	**G60038**	**G60063**

E SERIES VAN

92-05	E-150	**G60330**	**G60184**
92-05	E-250, E-350	**G60182**	**G60183**
92-05	E-350 w/Motorhome Conversion	**G60182**	**G60183**
85-91	E-250, E-350	**G60023**	**G60024**
75-91	E-100, E-150	**G60114**	**G60011**
75-91	E-350 w/Motorhome Conversion	**G60023**	**G60024**
75-84	E-250, E-350	**G60023**	**G60024**
68-74	E-100 (Late 1968)	**.....**	**G60042**

[31] Bellows Kit No. 141242 is recommended for use to protect piston rod from potentially harmful road debris. / El juego de fuelles No. 141242 es recomendado para proteger al vástago del pistón contra desechos de la carretera potencialmente dañinos. / Nécessaire de soufflets no 141242 recommandé pour protéger la tige de piston des débris de la route.

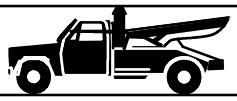

FORD (cont'd)

		Front Delantero Avant	Rear Trasero Arrière
68-74	E-200, E-300 (Late 1968)	.....	**G60042**
61-68	All (Early 1968)	**G60101**	**G60003**
ESCAPE			
01-04	Left Side	.....	**G61862**
01-04	Right Side	.....	**G61862**
EXCURSION			
00-05	2WD	**G60171**	**G60161**
00-05	4WD	**G61150**	**G61177**
EXPEDITION			
97-02	2WD (Exc. w/Front Air Leveling)	**G60257**	**G60260**
97-02	4WD (Exc. w/Front Air Leveling)	**G60259**	**G60260**
EXPLORER			
02-04	Sport & Sport Trac	**G60221**	**G60222**
95-01	All (Exc. w/Adjustable Suspension)	**G60221**	**G60222**
91-94	All	**G60162**	**G60161**
F SERIES			
55	F-100	**G60003**	**G60031**
53-55	F-250 (Exc. Heavy Duty Shocks)	**G60003**	.....
53-55	F-250 w/Heavy Duty Shocks	**G60003**	.....
53-55	F-350	**G60003**	.....
53-54	F-100 (Exc. Heavy Duty Shocks)	**G60003**	.....
53-54	F-100 w/Heavy Duty Shocks	**G60003**	.....
48-52	F-1, F-2 & F-3	**G60031**	**G60003**
F-100 PICKUP 2 W.D.			
80-83	All	**G60038**	**G60035**
70-79		**G60023**	**G60011**
65-69		**G60023**	**G60042**
61-64		.....	**G60031**
F-150 PICKUP 2 W.D.			
04	Heritage Series (Exc. Lightning & 7700 GVW)	**G60257**	**G61118**
97-03	All (Exc. Lightning & 7700 GVW)	**G60257**	**G61118**
85-96	All	**G60038**	**G60007**
80-84		**G60038**	**G60035**
75-79		**G60023**	**G60011**
F-250 PICKUP 2 W.D.			
97-99	All (Exc. Superduty)	**G60257**	**G61118**
97-98	All Over 8500 GVW	**G60038**	**G60007**
85-96	All	**G60038**	**G60007**
80-84		**G60038**	**G60007**
70-79	All (Exc. Super Cab)	**G60023**	**G60011**
70-79	All Super Cab	**G60023**	**G60042**
65-69	All	**G60023**	**G60042**
F-350 PICKUP 2 W.D.			
80-97	All (Exc. w/ Dual Rear Wheels)	**G60038**	**G60007**
80-97	All w/ Dual Rear Wheels	**G60038**	**G60035**
74-79	All Super Cab	**G60026**	**G60011**
67-79	All (Exc. Super Cab)	**G60023**	**G60042**
61-66	All	.....	**G60031**

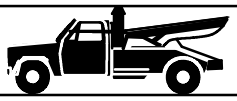

FORD (cont'd)

F-250 SUPER DUTY PICKUP 2 W.D.

		Front Delantero Avant	Rear Trasero Arrière
05	All	G60182	.....
99-04		G60182	G61149

F-350 SUPER DUTY PICKUP 2 W.D.

05	All	G60182	.....
99-04		G60182	G61149

F-450 SUPER DUTY PICKUP 2 W.D.

99-04	All	G61150	G61152
93-97	All (Begining Feb. 1993)	G60235	G60035
88-93	All (Before Feb. 1993)	G60179	G60035

F-550 SUPER DUTY PICKUP 2 W.D.

99-04	All	G61150	G61152

F-100 PICKUP 4 W.D.

77-79	All w/3-4" Lift Kit (Exc. Quad Suspension & Super Cab)	G60071 [31]	G60073 [31]
70-76	All (Exc. Lift Kit)	.....	G60024
70-76	All w/ 3 1/2-4" Lift Kit	.....	G60073 [31]
65	All (Early 1965)	G60002	G60031

F-150 PICKUP 4 W.D.

04	Heritage Series (Exc. Lightning & 7700 GVW)	G60259	G60258
97-03	All (Exc. 7700 GVW)	G60259	G60258
80-96	All (Exc. Quad Suspension & Lift Kit)	G60038	G60084
80-96	Quad Suspension (Exc. Lift Kit) Forward of Front Axle (2 req'd)	G60033	.....
80-96	Quad Suspension (Exc. Lift Kit) Rear	.....	G60084
80-96	Quad Suspension (Exc. Lift Kit) Rearward of Front Axle (2 req'd)	G60038	.....
80-86	All w/ 3-4" Lift Kit (Quad Suspension) Forward of Front Axle (2 req'd)	G60072 [31]	.....
80-86	All w/ 3-4" Lift Kit (Quad Suspension) Rear	.....	G60066 [31]
80-86	All w/ 3-4" Lift Kit (Quad Suspension) Rearward of Front Axle (2 req'd)	G60071 [31]	.....
80-85	All w/ 3-4" Lift Kit (Exc. Quad Suspension)	G60071 [31]	G60066 [31]
78-79	All Quad Susp. (Exc. Super Cab & Lift Kit) Forward of Front Axle (2 req'd)	G60129	.....
78-79	All Quad Susp. (Exc. Super Cab & Lift Kit) Rear	.....	G60024
78-79	All Quad Susp. (Exc. Super Cab & Lift Kit) Rearward of Front Axle (2 req'd)	G60026	.....
78-79	All Super Cab (Exc. Lift Kit)	G60046	G60024
77-79	All Std. Susp. (Exc. 1978-79 Super Cab & Lift Kit)	G60026	G60024
77-79	All w/ 3-4" Lift Kit (Exc. Quad Suspension and Super Cab)	G60071 [31]	G60073 [31]
75-76	All (Exc. Lift Kit)	.....	G60024
75-76	All w/ 3 1/2-4" Lift Kit	.....	G60073 [31]

F-250 PICKUP 4 W.D.

97-99	All (Exc. Superduty)	G60259	G60258
97-98	All Over 8,500 GVW	G60080	G60084
87-96	All	G60080	G60084
86		G60041	G60084
82-85	All w/ Clevis Type Lower Front Mount (Exc. w/ Dual Rear Wheels or Lift Kit)	G60041	G60084
80-82	All (Early 1982) (Exc. Supercab)	G60033	G60084
80-82	All Super Cab	G60041	G60084
77-79	All From Serial No. Y20001 (Exc. Super Cab)	G60046	G60024
66-77	All Up to Serial No. Y20000	G60002	.....
65	All	G60002	G60042
61-64		G60002	G60031

[31] Bellows Kit No. 141242 is recommended for use to protect piston rod from potentially harmful road debris. / El juego de fuelles No. 141242 es recomendado para proteger al vástago del pistón contra desechos de la carretera potencialmente dañinos. / Nécessaire de soufflets no 141242 recommandé pour protéger la tige de piston des débris de la route.

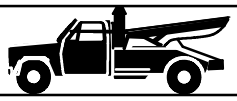

		Front Delantero Avant	Rear Trasero Arrière

FORD (cont'd)

F-350 PICKUP 4 W.D.

86-97	All (Exc. w/ Dual Rear Wheels or Lift Kit)	G60080	G60081
86-97	All w/ Dual Rear Wheels	G60080	G60084
82-85	All w/ Clevis Type Lower Front Mount (Exc. w/ Dual Rear Wheels or Lift Kit)	G60041	G60084
80-81	All (Exc. w/ Dual Rear Wheels or Lift Kit)	G60033	G60084
79	All (Exc. w/ Dual Rear Wheels)	G60046	G60024

F-250 SUPER DUTY PICKUP 4 W.D.

99-04	All	G61150	G61151

F-350 SUPER DUTY PICKUP 4 W.D.

99-04	All	G61150	G61151

F-450 SUPER DUTY PICKUP 4 W.D.

99-04	All	G61150	G61152

F-550 SUPER DUTY PICKUP 4 W.D.

99-04	All	G61150	G61152

P-SERIES

67-76	GVW up to 8,000 lbs.	G60031	.....
65-66	P-350, P-400, P-3500 & P-4000	G60031	.....

RANGER

98-05	2 W.D. (Exc. Edge & Electric Models)	G61112	G61113
98-05	4 W.D. & 2 W.D. Edge (Exc. Electric Models)	G60221	G61115
90-97	2 W.D.	G60171	G60144
90-97	4 W.D.	G60171	G60143
89	2 W.D. built from 2/89 (Vehicles w/12mm bolt in rear lower mount)	G60038	G60144
89	4 W.D. built from 2/89 (Vehicles w/12mm bolt in rear lower mount; Exc. High Ryder option)	G60038	G60143
89	4 W.D. w/High Ryder option built from 2/89 (Vehicles w/12mm bolt in rear lower mount)	G60158	G60143
87-89	4 W.D. built thru 1/89 (Vehicles w/10mm bolt in rear lower mount; Exc. High Ryder option)	G60038	G60048
87-89	4 W.D. w/High Ryder option built thru 1/89 (Vehicles w/10mm bolt in rear lower mount)	G60158	G60048
83-89	2 W.D. built thru 1/89 (Vehicles w/10mm bolt in rear lower mount)	G60038	G60063
83-86	4 W.D.	G60038	G60048

WINDSTAR

95-03	All (Exc. w/Rear Air Spring)	.....	G60219

GEO

TRACKER

89-97	All	.....	G61140

GMC

1/2 TON PICKUP 2 W.D. (C, R & SIERRA MODELS)

99-05	Sierra 1500 (Exc. HD Crew Cab & Adj Suspension)	G61124	G60206
99-05	Sierra 1500 HD Crew Cab	G61158	G60218
88-99	Exc. 1999 Sierra	G60098	G60097
73-87	All	G60014	G60010
67-72	Rear Coil Springs	G60014	.....
67-72	Rear Leaf Springs	G60014	G60021
63-66	All	G60014	G60021

3/4 TON PICKUP 2 W.D. (C, R & SIERRA MODELS)

99-05	Sierra 2500	G61158	G60218
88-00	C2500 Series	G60098	G60097
73-89	C20, R20, R2500 Crew Cab & Bonus Cab	G60014	G60044

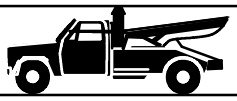

GMC (cont'd)

		Front Delantero Avant	Rear Trasero Arrière
73-89	C20, R20, R2500 Exc. Crew Cab & Bonus Cab	**G60014**	**G60010**
67-72	Rear Coil Springs	**G60014**	**.....**
67-72	Rear Leaf Springs	**G60014**	**G60021**
63-66	All	**G60014**	**G60021**
1 TON PICKUP 2 W.D. (C, R & SIERRA MODELS)			
01-05	Sierra 3500	**G61158**	**G60218**
91-03	C3500 HD w/Solid Front Axle	**G61153**	**G60097**
88-00	C3500 Exc. HD w/Straight Front Axle	**G60098**	**G60097**
88-91	C3500 Pickup Crew Cab; Cab/Chassis models	**G60014**	**G60044**
73-91	C30, R30, R3500	**G60014**	**G60044**
67-72	11,000 lb. Rear Axle	**G60014**	**.....**
67-72	Exc. 11,000 lb. Rear Axle	**G60014**	**G60021**
1/2 TON PICKUP 4 W.D. (K, V & SIERRA MODELS)			
01-05	Sierra 1500 HD Crew Cab	**G61158**	**G60218**
99-05	Sierra 1500 (Exc. HD Crew Cab & Adj Suspension)	**G61144**	**G60218**
88-99	Exc. 1999 Sierra	**G61159**	**G60097**
81-87	All Quad Suspension (Exc. Lift Kit) Rear	**.....**	**G60010**
81-87	Quad Suspension (Exc. Lift Kit) Long Shock Front (2 req'd.)	**G60307** [30]	**.....**
81-87	Quad Suspension (Exc. Lift Kit) Short Shock Front (2 req'd.)	**G60309** [30]	**.....**
73-87	All (Exc. Quad Suspension & Lift Kit)	**G60008**	**G60010**
73-87	All w/4" Lift Kit (Exc. Quad Suspension)	**G60064** [31]	**G60065** [31]
71-72	All	**G60008**	**G60045**
69-70		**G60008**	**.....**
3/4 TON PICKUP 4 W.D. (K, V & SIERRA MODELS)			
99-05	Sierra 2500	**G61158**	**G60218**
88-00	K2500	**G60163**	**G60097**
81-87	Quad Suspension (Exc. Lift Kit) Long Shock Front (2 req'd.)	**G60307** [30]	**.....**
81-87	Quad Suspension (Exc. Lift Kit) Rear	**.....**	**G60010**
81-87	Quad Suspension (Exc. Lift Kit) Short Shock Front (2 req'd.)	**G60309** [30]	**.....**
73-87	All (Exc. Quad Suspension & Lift Kit)	**G60008**	**G60010**
73-87	All w/4" Lift Kit (Exc. Quad Suspension)	**G60064** [31]	**G60065** [31]
71-72	All	**G60008**	**G60045**
69-70		**G60008**	**.....**
1 TON PICKUP 4 W.D. (K, V & SIERRA MODELS)			
01-05	Sierra 3500	**G61158**	**G60218**
88-00	K3500	**G60163**	**G60097**
88-91	R3500 Pickup Crew Cab & Cab/Chassis	**G60112**	**G60218**
77-88	K3500 (77-86) R3500 (87-88)	**G60112**	**G60218**
CANYON			
04-06	2 W.D w/ Z71 Off Road Package	**.....**	**G61879**
04-06	2 W.D. (Exc. Z71 Off Road Package)	**.....**	**G61882**
04-06	4 W.D.	**.....**	**G61879**
04-06	All	**G61884**	**.....**
ENVOY			
02-05	All w/ Rear Coil Spring Suspension	**.....**	**G61175**

[30] It is recommended that when replacing front shocks on vehicles with "quad shocks" option, all four shocks should match by series. / Cuando se reemplacen los amortiguadores delanteros de los vehiculos con la opción amortiguadores «Quad», se recomenda que los cuatro amortiguadores sean de la misma serie. / Lorsque les amortisseurs avant sont remplacés sur les véhicules avec amortisseurs «Quad», les quatre amortisseurs doivent être de la mèmem série.

[31] Bellows Kit No. 141242 is recommended for use to protect piston rod from potentially harmful road debris. / El juego de fuelles No. 141242 es recomendado para proteger al vástago del pistón contra desechos de la carretera potencialmente dañinos. / Nécessaire de soufflets no 141242 recommandé pour protéger la tige de piston des débris de la route.

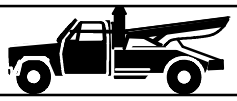

GMC (cont'd)

1/2 TON VAN (SAVANA & G MODELS)

		Front Delantero Avant	Rear Trasero Arrière
96-02	All	G60076 [12]	G60196
78-95		G60015	G60039
71-77		G60015	G60021
70	All w/I-Beam Front Axle	.....	G60021
70	All w/Independent Front Suspension	G60015	G60021
67-69	All	.....	G60021

3/4 TON VAN (SAVANA & G MODELS)

96-02	All (Exc. 8600 GVW)	G60076 [12]	G60196
78-95		G60015	G60039
71-77	All	G60015	G60021
70	All w/I-Beam Front Axle	.....	G60021
70	All w/Independent Front Suspension	G60015	G60021
67-69	All	.....	G60021

1 TON VAN (SAVANA & G MODELS)

96-02	All	G60076 [12]	G60196
92-96	All w/7100# (w/Chassis Cab), 7400#, or 8600# GVW	G60015	G60214
85-96	All (Exc. 7100# w/Chassis Cab, 7400#, 8600# & 9200# GVW)	G60015	G60039
79-96	All w/9200# GVW	G60015	G60111
78-84	All (Exc. 7100# w/Chassis Cab, 7400#, 8600# & 9200# GVW)	G60015	G60039
75-77	All w/146" Wheelbase	G60015	.....
71-77	Exc. w/146" Wheelbase	G60015	G60021

JIMMY 2 W.D.

73-82	All	G60014	G60010
70-72	Rear Coil Springs	G60014	.....
70-72	Rear Leaf Springs	G60014	G60021

JIMMY 4 W.D.

81-91	Quad Suspension (Exc. S-15 & Lift Kit) Long Shock Front (2 req'd.)	G60307 [30]	.....
81-91	Quad Suspension (Exc. S-15 & Lift Kit) Rear	.....	G60010
81-91	Quad Suspension (Exc. S-15 & Lift Kit) Short Shock Front (2 req'd.)	G60309 [30]	.....
73-91	All (Exc. Quad Suspension, S-15 & Lift Kit)	G60008	G60010
73-90	All w/4" Lift Kit (Exc. Quad Suspension & S-15)	G60064 [31]	G60065 [31]
71-72	All	G60008	G60045
70		G60008	.....

P MODELS FORWARD CONTROL

86-99	Motorhome Chassis w/I-Beam Front Suspension	G60185	G60044
85-99	Motorhome Chassis w/Independent Front Suspension	G60113	G60044
73-90	All (Exc. Motorhome Chassis)	G60014	G60044
79-89	P25, P2500	G60014	G60044
85	Motorhome Chassis w/I-Beam Front Suspension	G60111	G60044
74-84	Motorhome Chassis	G60113	G60044
74-81	P15, P1500	G60014	G60044
73-78	P25, P2500	G60014	G60010
73	P15, P1500	G60014	G60010

[12] Use Kit No. 140719 to replace original equipment hardware for lower shock absorber mounting when studs break or self-tapping screws are no longer useable. / Usar el juego nº 140719 para cambiar los components originales del soporte inferior del amortiguador cuando se rompan los pernos o ya no se puedan usar los tornillos autorroscantes. / Utiliser le kit nº 140719 pour remplacer l'équipement original de l'amortisseur inférieur lorsque les ouvertures de goujon ou les vis auto-réglables ne peuvent plus être utilisées.

[30] It is recommended that when replacing front shocks on vehicles with "quad shocks" option, all four shocks should match by series. / Cuando se reemplacen los amortiguadores delanteros de los vehiculos con la opción amortiguadores «Quad», se recomenda que los cuatro amortiguadores sean de la misma serie. / Lorsque les amortisseurs avant sont remplacés sur les véhicules avec amortisseurs «Quad», les quatre amortisseurs doivent être de la mèmem série.

[31] Bellows Kit No. 141242 is recommended for use to protect piston rod from potentially harmful road debris. / El juego de fuelles No. 141242 es recomendado para proteger al vástago del pistón contra desechos de la carretera potencialmente dañinos. / Nécessaire de soufflets no 141242 recommandé pour protéger la tige de piston des débris de la route.

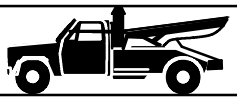

GMC (cont'd)

		Front Delantero Avant	Rear Trasero Arrière
68-72	11,000 lb. Rear Axle	**G60014**	**.....**
68-72	Exc. 11,000 lb. Rear Axle	**G60014**	**G60021**
68-72	P15, P1500	**G60014**	**.....**
68-72	P25, P2500	**G60014**	**G60021**
63-67	P15, P1500	**G60014**	**G60021**
PB1000 SERIES			
63-65	All	**G60014**	**G60021**
S15 ENVOY			
98-01	2 W.D.	**G60049**	**G60050**
98-01	4 W.D.	**G60051**	**G60050**
S15 JIMMY			
83-02	2 W.D.	**G60049**	**G60050**
83-02	4 W.D. (Exc. ZR2)	**G60051**	**G60050**
S15 PICKUP			
83-90	4 W.D.	**G60051**	**G60050**
82-90	2 W.D.	**G60049**	**G60050**
S15 SONOMA			
91-04	2 W.D.	**G60049**	**G60050**
91-04	4 W.D. (Exc. ZR2)	**G60051**	**G60050**
SAFARI VAN			
90-05	All 2 W.D.	**G60076** [12]	**G60077**
90-05	All 4 W.D.	**G61159**	**G60077**
85-89	All	**G60076** [12]	**G60077**
1/2 TON SUBURBAN 2 W.D. (C & R MODELS)			
92-99	All	**G60098**	**G60196**
73-91		**G60014**	**G60010**
68-72		**G60014**	**.....**
3/4 TON SUBURBAN 2 W.D. (C & R MODELS)			
92-99	All	**G60098**	**G60196**
73-91		**G60014**	**G60010**
68-72		**G60014**	**.....**
1/2 TON SUBURBAN 4 W.D. (K & V MODELS)			
92-99	All	**G60163**	**G60196**
81-91	Quad Suspension (Exc. Lift Kit) Long Shock Front (2 req'd.)	**G60307** [30]	**.....**
81-91	Quad Suspension (Exc. Lift Kit) Rear	**.....**	**G60010**
81-91	Quad Suspension (Exc. Lift Kit) Short Shock Front (2 req'd.)	**G60309** [30]	**.....**
73-91	All (Exc. Quad Suspension & Lift Kit)	**G60008**	**G60010**
73-91	All w/4" Lift Kit (Exc. Quad Suspension)	**G60064** [31]	**G60065** [31]
71-72	All	**G60008**	**G60045**
69-70		**G60008**	**.....**
3/4 TON SUBURBAN 4 W.D. (K & V MODELS)			
92-99	All	**G60163**	**G60196**
81-91	Quad Suspension (Exc. Lift Kit) Long Shock Front (2 req'd.)	**G60307** [30]	**.....**
81-91	Quad Suspension (Exc. Lift Kit) Rear	**.....**	**G60010**

[12] Use Kit No. 140719 to replace original equipment hardware for lower shock absorber mounting when studs break or self-tapping screws are no longer useable. / Usar el juego nº 140719 para cambiar los components originales del soporte inferior del amortiguador cuando se rompan los pernos o ya no se puedan usar los tornillos autorroscantes. / Utiliser le kit nº 140719 pour remplacer l'équipement original de l'amortisseur inférieur lorsque les ouvertures de goujon ou les vis auto-réglables ne peuvent plus être utilisées.

[30] It is recommended that when replacing front shocks on vehicles with "quad shocks" option, all four shocks should match by series. / Cuando se reemplacen los amortiguadores delanteros de los vehiculos con la opción amortiguadores «Quad», se recomenda que los cuatro amortiguadores sean de la misma serie. / Lorsque les amortisseurs avant sont remplacés sur les véhicules avec amortisseurs «Quad», les quatre amortisseurs doivent être de la mèmem série.

[31] Bellows Kit No. 141242 is recommended for use to protect piston rod from potentially harmful road debris. / El juego de fuelles No. 141242 es recomendado para proteger al vástago del pistón contra desechos de la carretera potencialmente dañinos. / Nécessaire de soufflets no 141242 recommandé pour protéger la tige de piston des débris de la route.

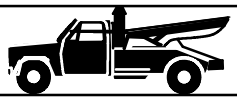

		Front Delantero Avant	Rear Trasero Arrière

GMC (cont'd)

81-91	Quad Suspension (Exc. Lift Kit) Short Shock Front (2 req'd.)	**G60309** [30]	**.....**
73-91	All (Exc. Quad Suspension & Lift Kit)	**G60008**	**G60010**
73-91	All w/4" Lift Kit (Exc. Quad Suspension)	**G60064** [31]	**G60065** [31]
71-72	All	**G60008**	**G60045**
69-70		**G60008**	**.....**

TRACKER (CANADIAN VEHICLE)

89-97	All	**.....**	**G61140**

YUKON

00-06	All (Inc. Denali) (Exc. Z55 AutoRide Suspension)	**G61144**	**G61866**
92-99	All 2 W.D.	**G60098**	**G60196**
92-99	All 4 W.D.	**G60163**	**G60196**

YUKON XL 1500

00-06	All (Inc. Denali) (Exc. Z55 AutoRide Suspension)	**G61144**	**G61866**

YUKON XL 2500

00-06	Exc. Nivomat	**G61158**	**G61866**

HONDA

PASSPORT

98-02	All	**G60165**	**G60253**
94-97		**G60165**	**G60164**

HUMMER

H2

03-05	All	**G61158**	**.....**

I.H.C. TRUCK

2 W.D. PICKUP, TRAVELALL, TRAVELETTE & WAGONMASTER

67-68	1000-B,C	**.....**	**G60031**
67-68	1200-B,C & 1300-B,C (Exc. Travelette w/166" Wheelbase)	**.....**	**G60031**
67-68	908-B,C, & 1100-B,C	**.....**	**G60031**
63-66	C-1000, D-1000 & 1000-A	**.....**	**G60031**
63-66	C-1200, D-1200, 1200-A, C-1300, D-1300 & 1300-A	**.....**	**G60031**
63-66	C-900, D-900, 900-A, C-1100, D-1100 & 1100-A	**.....**	**G60031**
61-62	C-100	**.....**	**G60031**
61-62	C-110, C-120	**.....**	**G60031**

4 W.D. PICKUP, TRAVELALL, TRAVELETTE & WAGONMASTER

67-68	1100-B,C, 1200-B,C, & 1300-B,C (Exc. Travelette w/166" Wheelbase)	**G60031**	**G60031**
67-68	1200-B,C Travelette w/166"Wheelbase	**G60031**	**.....**
63-66	C-1100, D-1100, 1100-A, C-1200, D-1200, 1200-A & 1300-A	**G60031**	**G60031**
61-62	C-110, C-120	**G60031**	**G60031**
57-60	A-124, B-120	**G60031**	**G60031**
57-58	A-120	**G60031**	**.....**

METRO SERIES

65-72	M-1200, M-1400, M-1500 & MA-1500	**.....**	**G60031**
65-72	M-700, M-800, M-900-U, M-1000 & M-1100 (Includes Metro 106)	**.....**	**G60031**

[30] It is recommended that when replacing front shocks on vehicles with "quad shocks" option, all four shocks should match by series. / Cuando se reemplacen los amortiguadores delanteros de los vehiculos con la opción amortiguadores «Quad», se recomenda que los cuatro amortiguadores sean de la misma serie. / Lorsque les amortisseurs avant sont remplacés sur les véhicules avec amortisseurs «Quad», les quatre amortisseurs doivent être de la mèmem série.

[31] Bellows Kit No. 141242 is recommended for use to protect piston rod from potentially harmful road debris. / El juego de fuelles No. 141242 es recomendado para proteger al vástago del pistón contra desechos de la carretera potencialmente dañinos. / Nécessaire de soufflets no 141242 recommandé pour protéger la tige de piston des débris de la route.

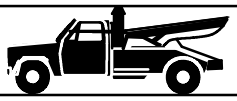

		Front Delantero Avant	Rear Trasero Arrière

I.H.C. TRUCK (cont'd)

METRO-LITE SERIES

58-68	AB-120, AB-140, SA-120 & SA-140	G60031	G60031
58-65	AM-120, SM-120	.....	G60031

SCOUT

71-80	Scout II	G60011	.....

INFINITI

QX4

02-03	Left Side	.....	G61180
02-03	Right Side	.....	G61180
Dec 98 -01	Left Side	.....	G61180
Dec 98 -01	Right Side	.....	G61180
97- Nov98	Left Side	.....	G60255
97- Nov98	Right Side	.....	G60255

ISUZU

ASCENDER

03-04	All w/ Rear Coil Spring Suspension	.....	G61175

AMIGO

98-99	All	G60165	G60253
89-95		G60310	G60329

HOMBRE

96-00	All 2WD (Exc. Sport Chassis)	G60049	G60050
96-00	All 4 W.D.	G60051	G60050

PICKUP

85-95	P'up (4 W.D.)	G60310	G60329
81-95	P'up (2 W.D.)	G60303	G60101
81-84	P'up (4 W.D.)	G60310	G60329

RODEO

98-04	All (Exc. Active Susp.)	G60165	G60253
91-97	All 4 Dr. (2 & 4 W.D.)	G60165	G60164

RODEO SPORT

01-03	All (Exc. Active Susp.)	G60165	G60253

TROOPER

00-02	2 W.D.	G60250	G60251
92-02	4 W.D.	G60250	G60251
89-91	Trooper II (4 W.D.)	G60104	.....
87-88		G60104	.....
85-86		G60310	G60329
84		G60310	G60329

VEHICROSS

99-01	All	G60250	G60251

JEEP

CHEROKEE

84-01	All	G60052	G60053

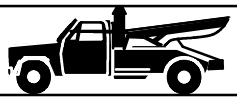

		Front Delantero Avant	Rear Trasero Arrière
JEEP (cont'd)			
76-83	All	**G60042**	**G60042**
75		**G60042**	**.....**
74		**G60042**	**.....**
CJ5			
82-83	All (Exc. Lift Kit)	**G60042**	**G60031**
82-83	All w/2" Lift Kit	**G60068** [31]	**G60069** [31]
82-83	All w/3-4" Lift Kit	**G60068** [31]	**G60067** [31]
76-81	All (Exc. Lift Kit)	**G60003**	**G60031**
76-81	All w/2-4" Lift Kit	**G60069** [31]	**G60067** [31]
72-75	All (Exc. Lift Kit)	**G60003**	**G60031**
66-75	All w/2-4" Lift Kit	**G60069** [31]	**G60067** [31]
66-71	All (Exc. w/5 Leaf Front Springs & Lift Kit)	**.....**	**G60031**
CJ6			
72-75	All (Exc. Lift Kit)	**G60003**	**G60031**
66-75	All w/2-4" Lift Kit	**G60069** [31]	**G60067** [31]
66-71	All (Exc. w/5 Leaf Front Springs & Lift Kit)	**.....**	**G60031**
CJ7			
82-86	All (Exc. Lift Kit)	**G60042**	**G60031**
82-86	All w/2" Lift Kit	**G60068** [31]	**G60069** [31]
82-86	All w/3-4" Lift Kit	**G60068** [31]	**G60067** [31]
76-81	All (Exc. Lift Kit)	**G60003**	**G60031**
76-81	All w/2-4" Lift Kit	**G60069** [31]	**G60067** [31]
CJ8 (SCRAMBLER)			
82-86	All (Exc. Lift Kit)	**G60042**	**G60031**
81	All	**G60003**	**G60031**
COMANCHE (MJ)			
86-92	All	**G60052**	**G60101**
DJ5			
66-74	All (Exc. Lift Kit)	**G60003**	**G60031**
66-74	All w/2-4" Lift Kit	**G60069** [31]	**G60067** [31]
DJ6			
66-68	All	**.....**	**G60031**
66-68	All w/2-4" Lift Kit	**G60069** [31]	**G60067** [31]
FC150			
57-60	All	**.....**	**G60031**
FC170			
63-65	All	**G60031**	**G60031**
GLADIATOR			
66	J-200, J-300, J-2000 & J-3000	**.....**	**G60031**
64-65	J-200, J-300 (Exc. Independent Front Suspension)	**.....**	**G60031**
63-65	J-200, J-300 w/Independent Front Suspension	**.....**	**G60031**
GRAND CHEROKEE			
99-04	All	**G61204**	**G61170**
95-98		**G60052**	**G60226**
93-94	All ZJ	**G60052**	**G60186**
GRAND WAGONEER			
84-91	All	**G60042**	**G60042**

[31] Bellows Kit No. 141242 is recommended for use to protect piston rod from potentially harmful road debris. / El juego de fuelles No. 141242 es recomendado para proteger al vástago del pistón contra desechos de la carretera potencialmente dañinos. / Nécessaire de soufflets no 141242 recommandé pour protéger la tige de piston des débris de la route.

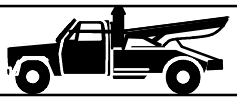

		Front Delantero Avant	Rear Trasero Arrière

JEEP (cont'd)

J10 (Pickup)

74-88	All	G60042	G60042

J20 (Pickup)

74-88	All	G60042	G60042

JEEP

54-71	MD Military Jeep & Ambulance (M38 A1)	.....	G60031
59-60	Maverick Station Wagon	.....	G60031
55-60	All (Exc. w/5 Leaf Front Springs & Lift Kit)	.....	G60031
47-54	All w/Independent Front Suspension	.....	G60031
48-51		.....	G60031

JEEPSTER

70-73	All	.....	G60031

LIBERTY

02-05	All	.....	G61178

UNIVERSAL

65-67	All	.....	G60031
65-67	All w/2-4" Lift Kit	G60069 [31]	G60067 [31]
61-64	All	.....	G60031

WAGONEER

84-90	All	G60052	G60053
76-83		G60042	G60042
75		G60042	.....
74		G60042	G60003
63-73	Exc. 1963-65 Independent Front Suspension	G60101	G60003
63-65	All w/Independent Front Suspension	.....	G60003

WRANGLER

97-05	All (TJ)	G60264	G60265
87-95	All (YJ)	G60129	G60099

KIA

SPORTAGE

00-02	All	.....	G60263
95-99		.....	G60263

LAND ROVER

DISCOVERY

94-99	All (Exc. Discovery II Series)	G60124	G60237

RANGE ROVER

94-95	All Classic w/o Air Suspension	G60124	G60088
94-95	Classic w/Air Suspension	G60176	G60237

LEXUS

LX450

96-97	All	G60176	G60177

LX470

98-04	Torsion Bar Front Suspension	G61173	G61169

[31] Bellows Kit No. 141242 is recommended for use to protect piston rod from potentially harmful road debris. / El juego de fuelles No. 141242 es recomendado para proteger al vástago del pistón contra desechos de la carretera potencialmente dañinos. / Nécessaire de soufflets no 141242 recommandé pour protéger la tige de piston des débris de la route.

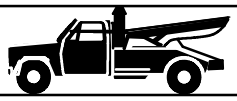

		Front Delantero Avant	Rear Trasero Arrière

LINCOLN

NAVIGATOR 2 W.D.

98-02	Exc. Air Suspension	G60257	G60260

MAZDA

B SERIES

98-05	2 W.D.	G61112	G61113
98-05	4 W.D.	G60221	G61115
94-97	2 W.D.	G60171	G60144
94-97	4 W.D.	G60171	G60143

B2000

86-87	All	G60104	G60308

B2200

87-93	All	G60104	G60308

B2600

87-93	2 W.D.	G60104	G60308
87-93	4 W.D.	G60194	G60197

MPV

Aug 00 - 05	Left Side	.....	G61864
Aug 00 - 05	Right Side	.....	G61864
00- Jul 00	Left Side	.....	G61864
00- Jul 00	Right Side	.....	G61864
95-98	MPV 2WD (Exc. ABS)	.....	G60160
95-98	MPV 4WD (Exc. ABS and self leveling system)	.....	G60199
89-94	MPV 2WD	.....	G60160
89-94	MPV 4WD (Exc. self leveling system)	.....	G60199

NAVAJO

91-94	All	G60162	G60161

TRIBUTE

01-04	Left Side	.....	G61862
01-04	Right Side	.....	G61862

MERCURY

MOUNTAINEER

97-01	All (Exc. w/Adjustable Suspension)	G60221	G60222

VILLAGER

99-02	Left Side	.....	G60003
99-02	Right Side	.....	G60003
93-98	Left Side	.....	G60003
93-98	Right Side	.....	G60003

MITSUBISHI

MIGHTY MAX

83-96	2 W.D.	G60354	G60308
83-96	4 W.D.	G60074	G60075

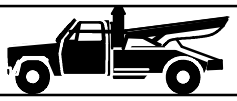

		Front Delantero Avant	Rear Trasero Arrière
MITSUBISHI (cont'd)			
MONTERO			
92-00	All (Exc. Air Suspension & Sport)	**G61122** [34]	**G61121** [34]
89-91	All w/V6	**G60074**	**G60152**
83-89	All w/4cyl	**G60074**	**G60101**
MONTERO SPORT			
98-02	All	**G61122**	**G60101**
VAN			
87-90	Van/Wagon	**G60305**	**G60308**
NISSAN			
521 PICKUP			
69-72	All	**G60303**	**G60100**
620 PICKUP			
72-79	All	**G60303**	**G60100**
720 PICKUP			
85-86	2 W.D. Vehicles Mfg. thru July, 1986	**G60303**	**G60100**
85-86	4 W.D.	**G60303**	**G60101**
82-84	2 W.D.	**G60303**	**G60100**
82-84	4 W.D.	**G60303**	**G60101**
80-81	All	**G60303**	**G60100**
ARMADA			
04-05	All (Exc. Auto Leveling System)	**.....**	**G61875**
FRONTIER			
03-04	2WD (Exc. Crew Cab & Desert Runner)	**G61154**	**G60308**
03-04	4WD (Exc. Crew Cab)	**G61154**	**G60101**
00-04	4WD w/ Crew Cab	**G61154**	**G60101**
00-04	Desert Runner	**G61154**	**G60101**
98-04	2WD Crew Cab (Exc. Desert Runner)	**G61154**	**G60101**
98-02	2WD (Exc. Crew Cab & Desert Runner)	**G60310**	**G60308**
98-02	4WD (Exc. Crew Cab)	**G60310**	**G60101**
PATHFINDER			
02-04	All	**.....**	**G61180**
99-01	All Built from 12/98 Left Side	**.....**	**G61180**
99-01	All Built from 12/98 Right Side	**.....**	**G61180**
96-99	All Built to 11/98 Left Side	**.....**	**G60255**
96-99	All Built to 11/98 Right Side	**.....**	**G60255**
87-95	All	**G60305** [34]	**G60101** [34]
PICKUP			
86-97	2 W.D. Vehicles Mfg. from August 1986	**G60310**	**G60308**
86-97	4 W.D.	**G60303**	**G60101**
QUEST			
99-02	Left Side	**.....**	**G60003**
99-02	Right Side	**.....**	**G60003**
93-98	Left Side	**.....**	**G60003**
93-98	Right Side	**.....**	**G60003**

34 See Reference D for procedures to replace Electronic Adjustable Suspension with non-adjustable product. / La referencia D proporciona el procedimiento para sustituir a la suspensión electrónica ajustable por un producto no ajustable. / La référence D fournit la marche à suivre pour remplacer la suspension électronique ajustable par un produit non ajustable.

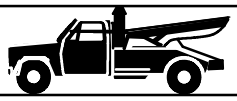

		Front Delantero Avant	Rear Trasero Arrière

NISSAN (cont'd)

TITAN

04-05	2 W.D.	.....	G61883
04-05	4 W.D.	.....	G61878

XTERRA

00-04	All	G61154	G60101

OLDSMOBILE

BRAVADA

02-04	All	.....	G61175
91-01		G60051	G60050

SILHOUETTE VAN

97-04	All	.....	G61116
90-96		.....	G60312

PLYMOUTH

ARROW PICKUP

79-82	All	G60354	G60308

PB100 VAN

74-80	All	G60017	G60039

PB150 VAN

81-83	All	G60017	G60039

PB200 VAN

74-80	All	G60017	G60039

PB250 VAN

81-83	All	G60017	G60039

PB300 VAN

74-80	All (Exc. w/ 4000 lb. Front Axle)	G60017	G60039
74-80	All w/ 4000 lb. Front Axle	G60043 [10]	G60039

PB350 VAN

81-83	All (Exc. w/ 4000 lb. Front Axle)	G60017	G60039
81-83	All w/ 4000 lb. Front Axle	G60043 [10]	G60039

TRAILDUSTER 2 W.D.

75-81	All	G60017	G60012

TRAILDUSTER 4 W.D.

76-81	All	G60028	G60029
74-75		G60028	G60012

VOYAGER

96-00	(Exc. ABS and Nivomat Self-Leveling Option)	.....	G60233 [8,9]
96-00	All w/ ABS (Exc. Nivomat Self-Leveling Option)	.....	G60233 [8,9]
86-95	All Mfg. after 1/2/86	.....	G60062
84-86	All Mfg. to 1/2/86	.....	G60062

8 Also works as conventional type replacement for Nivomat Suspension. / Conviene también como recambio habitual para los sistemas de suspensión Nivomat. / Convient aussi comme pièce de recharge habituelle pour les systèmes de suspension Nivomat.

9 If suspension spring contacts this unit, rotate suspension spring 180 degrees. / Si el resorte de suspensión entra en contacto con la unidad, rote el resorte de suspensión 180 grados. / Si le ressort de suspension entre en contact avec l'unité, faire pivoter le ressort de 180 degrees.

10 Slight grinding of control arm opening is required to install product made before August, 1988. / Un pequeño lijado de ajuste a la abertura del brazo de control es requerido para instalar productos fabricados antes de agosto 1988. / Un usinage mineur de l'ouverture de la bielle de poussée est nécessaire pour installer les pièces fabriquées avant août 1988.

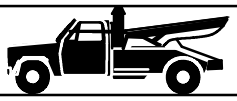

		Front Delantero Avant	Rear Trasero Arrière

PONTIAC

AZTEK

01-05	All w/All Wheel Drive	.....	**G61868**
01-05	All w/Front Wheel Drive	.....	**G61869**

MONTANA

99-05	All	.....	**G61116**

SUNRUNNER (CANADIAN VEHICLE)

94-97	Left Side	.....	**G61140**
94-97	Right Side	.....	**G61140**

TRANS SPORT

97-98	All	.....	**G61116**
90-96		.....	**G60312**

SUZUKI

SAMURAI

86-95	All JL, JX	**G61139**	**G60353**

SIDEKICK

96-98	All (w/ABS)	.....	**G61140**
89-98	All (Exc. ABS)	.....	**G61140**

VITARA / GRAND VITARA

99-04	All	.....	**G61140**

X-90

96-98	All	.....	**G61140**

TOYOTA

4RUNNER

96-02	All	.....	**G60269**
90-95		**G60153**	**G60154**
86-89		**G60086**	**G60103**
84-85		**G60105**	**G60103**

LAND CRUISER

98-05	All	**G61173**	**G61169**
91-97	Land Cruiser (FJ80)	**G60176**	**G60177**
88-90	Station Wagon (FJ60)	**G60091**	**G60128**
80-87		**G60091**	**G60101**
75-83	All (FJ40) (Exc. Station Wagon) Built From Jan, 1975	**G60003**	**G60101**
69-79	Station Wagon (FJ55)	.....	**G60101**
67-74	All (FJ40) (Exc. Station Wagon) Built Thru Dec, 1974	**G60003**	.....

PICKUP

86-95	4 W.D. (Exc. Lift Kit)	**G60086**	**G60103**
85-95	2 W.D.	**G60304**	**G60308**
85-92	2 W.D. 1 Ton	**G60304**	**G60101**
84-85	4 W.D. (Exc. Lift Kit)	**G60105**	**G60103**
84	2 W.D.	**G60304**	**G60308**
80-83	4 W.D. (Exc. Lift Kit)	**G60105**	**G60101**
80-83	4 W.D. w/2-3" Lift Kit	**G60070** [31]	**G60067** [31]
70-83	2 W.D. (Incl. Mojave)	.....	**G60308**

PREVIA

91-97	All including All-Trac Left Side	.....	**G60180**
91-97	All including All-Trac Right Side	.....	**G60180**

[31] Bellows Kit No. 141242 is recommended for use to protect piston rod from potentially harmful road debris. / El juego de fuelles No. 141242 es recomendado para proteger al vástago del pistón contra desechos de la carretera potencialmente dañinos. / Nécessaire de soufflets no 141242 recommandé pour protéger la tige de piston des débris de la route.

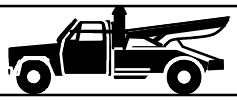

		Front Delantero Avant	Rear Trasero Arrière
TOYOTA (cont'd)			
RAV4			
May 00 - 03	Left Side	.....	**G61860**
May 00 - 03	Right Side	.....	**G61860**
SEQUOIA			
01-04	All	.....	**G61865**
SIENNA			
98-03	Left Side	.....	**G60164**
98-03	Right Side	.....	**G60164**
T100			
93-98	All 2 W.D.	**G60304**	**G60096**
93-98	All 4 W.D.	**G60086**	**G60204**
TACOMA			
95-04	All 2 W.D. Except Pre-Runner	**G60338**	**G60232**
95-04	All 4 W.D. & Pre-Runner 2 W.D.	.....	**G60103**
TUNDRA			
00-03	All	.....	**G61156**
VAN WAGON			
87-89	All 4 W.D.	**G60169**	**G60106**
87-89	All w/ Rear Coil Springs 2 W.D.	**G60301**	**G60087**
84-88	All w/ Rear Leaf Springs	**G60301**	**G60308**
84-86	Rear Coil Springs	**G60301**	**G60087**
VOLKSWAGEN			
VANAGON			
86-89	4 W.D.	.....	**G60077**

Gabriel® COMMERCIAL VEHICLE

Year Año Année	Model Modelo Modèle	O.E.M. #	Mount	Front Delantero Avant	Rear Trasero Arrière
ABC BUS					
	Additional O.E.M. Interchanges	12B-5-1		85700	
		3166657		85700	
ACF BRILL BUS					
	37R	.....		83225	.....
	C-27 and C-31 City Bus	.....		85307	85307
	C-36 City Bus Serial #1051 and on	.....		85307	85307
	C-37M	.....		83225	83225
	C-44 City Bus and T-44 Trolley Bus	.....		85308 or 89422	85308 or 89422
	IC-41 Intercity Bus Serial #1088 and on	.....		85308 or 89422	85308 or 89422
	IC-41 Intercity Bus to Serial #1088	.....		85307	85307
	Additional O.E.M. Interchanges	610513		85307	
		631237		85308 or 89422	
		641521		85308 or 89422	
		649648		85308 or 89422	
		659129		85303	
		661732		83215	
		661733		83225	
		995891		85307	
ADVANCE MIXER					
	ALL	680087		85334	.....
ALLCO TRAILER					
	Dump Trailers with Watson & Chalin TA-5000-DB-19 Air Suspension	727602		.....	83122 or 89406
AM GENERAL					
	Small Bus	5979484		.....	85302 or 89420
	Additional O.E.M. Interchanges	3166657		85700	
		4975501		85700	
		5565748		85700	
		5957136		85700	
		5969438		85700	
		5978712		85700	
		5979574		85700	
		5982537		85700	
AUTOCAR - See VOLVO-AUTOCAR					
BECK BUS					
	Deck and 1/2 Bus - Spring Suspension	.....		85307	85307
	Deck and 1/2 Bus - Trailing Wheel	.....		.....	85301
	Deck and 1/2 Bus with Air Suspension	.....		85304	85304
	Luxury Liner Bus - Spring Suspension	.....		85307	85307
	Mainliner with Air Suspension	.....		85304	85304
	Additional O.E.M. Interchanges	14QK-140		85304	
		14QK-2102		85304	

Gabriel Part Numbers that appear in BLUE are GasSLX, adjustable shocks.\ Los números de parte Gabriel imprimidos en AZUL son amortiguadores ajustables GasSLX. \ Les numéros de pièce Gabriel imprimés en BLEU sont des amortisseurs ajustables GasSLX.

Gabriel® COMMERCIAL VEHICLE

Year Año Année	Model Modelo Modèle	O.E.M. #	Mount	Front Delantero Avant	Rear Trasero Arrière
BENSON TRUCK BODIES INC.					
	Models with Hendrickson Intrax Air Suspension	A-20002		.....	85000 or 89436
	Models with Neway Air Suspension	90044089		.....	83124 or 89407
BERING TRUCK CORP.					
	HD80TT Models with Hendrickson HAS-400 Air Suspension	47902-24		.....	83121
	Models with Hendrickson HAS-230 Air Suspension	47902-24		.....	83121
THE BINKLEY COMPANY					
1997	Trailers with Binkley AirLite Suspension	16965		.....	85006
		6898		.....	83125
BLUEBIRD SCHOOL BUS					
	All American	0823054		85304	.....
	Bus with 35" Chassis	303-1350628		85712	.....
		90-1968		85712	.....
	Buses with Neway Air Suspension	1526417		.....	85052
		90044448		.....	85051
	Buses with Reyco Air Suspension	1668722		85030 or 89440	.....
		1668730		.....	85013 or 89414
		1722214		.....	85030 or 89440
		1722222		.....	85013 or 89414
	Rear Engine Model School Buses with 1 " Mounting Pins			85307	.....
		609180		.....	85304
		614958		85307	.....
		614966		85307	.....
		614974		.....	85304
	School Bus with 3/4" Mounting Pins	2021459		85012 or 89413	85012 or 89413
	TC 2000 Bus, TC/2000 FE Series				
	- With Neway Rear Air Suspension	90045050		.....	85914
	- With Ridewell Front Suspension Option #4540	1004167		85712	.....
		1316546		.....	85006
		1317767		85029	.....
		1658533		.....	85010
		1667831		85029	.....
	- With Ridewell Rear Suspension Option #4540	0961284		.....	85734
	- With Standard Flat Leaf Rear Springs	1746163		.....	85006
	- With Standard Parabolic Front Springs	1658525		89432	.....
	Models with O.E.M. Number	0823054		85304	.....
		1750793		.....	85712
		300-1316546		.....	85006
	Additional O.E.M. Interchanges	0523047		85736	
		1217934		85304	
		1962422		85304	
		1962430		83207 or 89407	
		300-0823047		85736	
		300-0823054		85304	
		300-09612284		85734	
		4759272		89447	

Gabriel Part Numbers that appear in BLUE are GasSLX, adjustable shocks.\ Los números de parte Gabriel imprimidos en AZUL son amortiguadores ajustables GasSLX. \ Les numéros de pièce Gabriel imprimés en BLEU sont des amortisseurs ajustables GasSLX.

Gabriel® COMMERCIAL VEHICLE

Year Año Année	Model Modelo Modèle	O.E.M. #	Mount	Front Delantero Avant	Rear Trasero Arrière
BLUEBIRD SCHOOL BUS .. cont'd					
	Additional O.E.M. Interchanges	680155		85712	
		70317		89432	
		70397		85006	
		7805M1001		85919	
		90-1813		85712	
		A-4890		85712	
BREDA BUS					
	Models with O.E.M. Number	500-403-4		.....	.....
BROCKWAY SCHOOL BUS					
	257T, 260S, 260T	.....		83207 or 89407	.....
	300, 400, 500 Series				
	- With 1" Mounting Pins	.....		85307	.....
	- With 3/4" Mounting Pins	.....		85012 or 89413	.....
	55 and 61 Passenger School Bus				
	- With 1" Rear Mounting Pins	.....		83216	.....
		.....		.....	85305
	- With 3/4" Rear Mounting Pins	.....		83216	.....
	88WH, 128W, 154W	.....		83216	.....
	Less than 55 Passenger School Bus	.....		83216	.....
	Models with O.E.M. Number	14QK-281P10		85305	.....
		14QK-282P3		83216	.....
		152398		85304	.....
		152412		83215	.....
		508657		85307	.....
		515231		85303	.....
		530873		83207 or 89407	.....
		532397		85307	.....
BUILT RITE					
	Models with Air Suspension	318-06-100		.....	85006
BUS & TRUCK CO.					
	Silver Eagle Bus	0100-905		85307	85307
		680091		85303	85303
		70039		85303	85303
		70041		85305	85305
CASCADE TRAILER					
	Models with Air Suspension	120-1		.....	83125
CHALMERS SUSPENSION					
	K800-199 Series Kit	665174		.....	85060
	Models with O.E.M. Number	665174		.....	85060
	Additional O.E.M. Interchanges	800670		85301	

Gabriel Part Numbers that appear in BLUE are GasSLX, adjustable shocks.\ Los números de parte Gabriel imprimidos en AZUL son amortiguadores ajustables GasSLX. \ Les numéros de pièce Gabriel imprimés en BLEU sont des amortisseurs ajustables GasSLX.

Gabriel® COMMERCIAL VEHICLE

Year Año Année	Model Modelo Modèle	O.E.M. #	Mount	Front Delantero Avant	Rear Trasero Arrière
	CHANCE BUS				
	Models with O.E.M. Number	59039		83207 or 89407	83207 or 89407
		6892		83207 or 89407	83207 or 89407
		6893		83203 or 89436	.....
		728600		83203 or 89436	83203 or 89436
		AS789B		85014	85014
	Additional O.E.M. Interchanges	270-6708		85014	
		665017		85014	
	CHEVROLET TRUCK (Also See GMC Truck)				
	4, 40 & 4000 Series				
1971-72	All - Exc. Tilt Cab	22012096		83221	.....
		3192892		83221	.....
1969-70	All - Exc. Tilt Cab	22012096		.....	83221
		3192892		.....	83221
1960-62	C-40	.....		.....	83221
1963-68	C-40 , P-40, SS-40	.....		85005 or 89430	.....
		.....		.....	83221
1968	Cowl - Exc. School Bus	22012096		83221	.....
		3192892		83221	.....
1969-70	D-D Forward Control with Tilt Cab	22012095		85005 or 89430	.....
		4940606		85005 or 89430	.....
1969-70	D-D Forward Control with 9000 & 11000 lb Axles - Ex. Tilt Cab	22012096		83221	.....
		3192892		83221	.....
1971-72	S-40 School Bus	22012096		83221	.....
		3192892		83221	.....
1967-70	S-40 School Bus	22012096		83221	83221
		3192892		83221	83221
1967-68	TDM 4 Cycle Detroit Diesel with Tandem Axle - Exc. Tilt Cab	22012096		.....	83221
		3192892		.....	83221
	5, 50, 5000 & 5500 Series (Kodiak)				
1969-72	All - Exc. Tilt Cab	22012096		83221	83221
		3192892		83221	83221
	C Chassis - Conventional Cab				
1990-06	- Front shock	15123676		83136	.....
		88982682		83136	.....
1990-99	- Front shock	15588554		83136	.....
		22064230		83136	.....
1990-99	- With 11000, 13500, 15000 lb Taperleaf Springs	22064231		.....	85324
1990-06	- With 15000, 19000, 21000 lb Multileaf Springs	15174902		.....	85071
		22064232		.....	85071
1983-99	C Chassis - Conventional Cab with 9100 to 17500 lb Rear Axle	22064432		.....	85050

Gabriel Part Numbers that appear in BLUE are GasSLX, adjustable shocks.\ Los números de parte Gabriel imprimidos en AZUL son amortiguadores ajustables GasSLX. \
Les numéros de pièce Gabriel imprimés en BLEU sont des amortisseurs ajustables GasSLX.

Gabriel® COMMERCIAL VEHICLE

Year Año Année	Model Modelo Modèle	O.E.M. #	Mount	Front Delantero Avant	Rear Trasero Arrière
CHEVROLET TRUCK 5, 50, 5000 & 5500 Series (Kodiak) .. cont'd					
1976-89	C, M, S Chassis - Conventional Cab	22002294		83304	.....
		22007752		83304	.....
		22012096		.....	83221
		22012169		.....	83221
1975-80	C, M, S Chassis - Conventional Cab	4975510		83221	.....
1973-80	C, M, S Chassis - Conventional Cab	22007750		83207 or 89407	.....
		4975467		83207 or 89407	.....
		4975494		83207 or 89407	.....
1973-89	C, S Chassis - Conventional Cab and School Bus	22012095		.....	85005 or 89430
		22012166		.....	85005 or 89430
1973-80	C, S Chassis - Conventional Cab and School Bus	22012096		.....	83221
		3192892		.....	83221
1963-69	C-50, M-50, S-50, SE-50, T-50	.....		.....	83221
		.....		85005 or 89430	.....
1968	Cowl - Exc. School Bus	22012096		83221	.....
		3192892		83221	.....
1969-70	D-D Forward Control with 9000 & 11000 lb Axles - Exc. Tilt Cab	22012096		83221	.....
		3192892		83221	.....
1969-70	D-D Forward Control with Tilt Cab	22012095		85005 or 89430	.....
		4940606		85005 or 89430	.....
1973-78	S-50 School Bus	22012166		.....	85005 or 89430
		3192892		.....	83221
1969-72	S-50 School Bus	3192892		83221	83221
1960-62	Standard and Heavy Duty Truck and School Bus (2 Ton)	.....		.....	83221
1971-72	TDM 4 Cycle Detroit Diesel with Tandem Axle - Exc. Tilt Cab	22012095		.....	85005 or 89430
		4940606		.....	85005 or 89430
1967-68	TDM 4 Cycle Detroit Diesel with Tandem Axle - Exc. Tilt Cab	22012096		.....	83221
		3192892		.....	83221
	Models with O.E.M. Number	88982684		83136	.....
		88982686		.....	85071
		88982688		.....	85336
6, 60 & 6000 Series (Kodiak)					
1993-06	12000 lb RR SUSP(GZH) Heavy Duty	21998392		.....	85336
		88963409		.....	85336
1993-99	12000 lb RR SUSP(GZH) Heavy Duty	22064489		.....	85336
1992-06	16900 lb Taperleaf Springs RR SUSP(GZH) Heavy Duty	21998392		.....	85336
		88963409		.....	85336
1992-99	16900 lb Taperleaf Springs RR SUSP(GZH) Heavy Duty	22064489		.....	85336
1969-72	All - Exc. Tilt Cab	22012096		83221	83221
		3192892		83221	83221

Gabriel Part Numbers that appear in BLUE are GasSLX, adjustable shocks.\ Los números de parte Gabriel imprimidos en AZUL son amortiguadores ajustables GasSLX. \ Les numéros de pièce Gabriel imprimés en BLEU sont des amortisseurs ajustables GasSLX.

Gabriel® COMMERCIAL VEHICLE

CHEVROLET TRUCK 6, 60 & 6000 Series (Kodiak) .. cont'd

Year Año Année	Model Modelo Modèle	O.E.M. #	Mount	Front Delantero Avant	Rear Trasero Arrière
1968-69	All with 9000 & 11000 lb Axles - Exc. Tilt Cab	22012095		85005 or 89430	.....
		4940606		85005 or 89430	.....
1979-89	B6P042 School Bus (Axle codes F070, F070D)	22002294		83304	.....
		22007752		83304	.....
1979-89	B6P042 School Bus (Axle codes F090, F120D)	22002295		83303	.....
		22007753		83303	.....
		22017531		83303	.....
1979-89	B6P042 School Bus w/15000 lb or 17000 lb Rear Springs	22012096		.....	83221
		22012169		.....	83221
1979-89	B6P042 School Bus w/18500 or 20800 lb Rear Springs	22012095		.....	85005 or 89430
		22012166		.....	85005 or 89430
1990-99	C Chassis - Conventional Cab				
1990-06	- Front shock	15123676		83136	.....
		88982682		83136	.....
1990-99	- Front shock	15588554		83136	.....
		22064230		83136	.....
1990-99	- With 11000, 13500, 15000 lb Taperleaf Springs	22064231		.....	85324
1990-06	- With 15000, 19000, 21000 lb Multileaf Springs	15174902		.....	85071
		22064232		.....	85071
1990-06	- With 17850 lb Taperleaf Springs	21998392		.....	85336
		88963409		.....	85336
1990-99	- With 17850 lb Taperleaf Springs	22064489		.....	85336
1990-99	- With 19000, 21000, 23000 lb Taperleaf Springs (EXC Low Profile Vehicle)	22064233		.....	83136
1983-99	C Chassis - Conventional Cab with 9100 to 17500 lb Rear Axle	22064432		.....	85050
1976-89	C, M Chassis - Conventional Cab	22002294		83304	.....
		22007752		83304	.....
1975-80	C, M, S Chassis - Conventional Cab and School Bus	4975510		83221	.....
1973-75	C, M, S Chassis - Conventional Cab and School Bus with 5000 & 7000 lb Axle	22007750		83207 or 89407	.....
		4975467		83207 or 89407	.....
		4975494		83207 or 89407	.....
1973-89	C, S Chassis - Conventional Cab and School Bus - Exc. with 20800 & 23000 lb Rear Axle	22012096		.....	83221
		22012169		.....	83221
		3192892		.....	83221
1973-89	C, S Chassis - Conventional Cab and School Bus with 20800 & 23000 lb Rear Axles	22012095		.....	85005 or 89430
		22012166		.....	85005 or 89430
		4940606		.....	85005 or 89430
1979-89	C, S Chassis - Conventional Cab and School Bus	22002295		83303	.....
		22007753		83303	.....
		22017530		83303	.....
		22017531		83303	.....

Gabriel Part Numbers that appear in BLUE are GasSLX, adjustable shocks.\ Los números de parte Gabriel imprimidos en AZUL son amortiguadores ajustables GasSLX. \
Les numéros de pièce Gabriel imprimés en BLEU sont des amortisseurs ajustables GasSLX.

Gabriel® COMMERCIAL VEHICLE

CHEVROLET TRUCK 6, 60 & 6000 Series (Kodiak) .. cont'd

Year Año Année	Model Modelo Modèle	O.E.M. #	Mount	Front Delantero Avant	Rear Trasero Arrière
1973-80	C, S, T Chassis - Conventional & Tilt Cab and School Bus with 5000 & 7000 lb Axle	22002293		85005 or 89430	.....
		22007701		85005 or 89430	.....
		22007751		83303	.....
		22012095		85005 or 89430	.....
		3192890		85005 or 89430	.....
		4940606		85005 or 89430	.....
		4940662		85005 or 89430	.....
		4975497		85005 or 89430	.....
1963-68	C-60, M-60, T-60	.....		85005 or 89430	.....
		.....		.....	83221
1971-72	Conventional Cab & Tilt Cab with 9000 & 11000 lb Axles	22012095		.....	85005 or 89430
		4940606		.....	85005 or 89430
1968	Cowl - Exc. School Bus	22012096		83221	.....
		3192892		83221	.....
1969-70	D - D Forward Control with 9000 & 11000 lb Axles - Exc. Tilt Cab	22012096		83221	.....
		3192892		83221	.....
1995-99	Models with Hendrickson Air Suspension (Stamping number 47902-13)	12474915		.....	83122 or 89406
		15963161		.....	83122 or 89406
1996-99	Models with Hendrickson Air Suspension (Stamping number 47902-29)	12474917		.....	83121
		15740554		.....	83121
1976-89	S Chassis - School Bus	22002294		83304	.....
		22007702		83304	.....
		22007752		83304	.....
1973-78	S-60	4975510		83221	.....
1969-72	S-60	3192892		83221	83221
1973-78	S-60 w/Air Brakes	22007701		.....	85005 or 89430
		22007751		.....	83303
		22012095		.....	85005 or 89430
		22012166		.....	85005 or 89430
		3171069		.....	85304
		4940606		.....	85005 or 89430
1973-75	SE, SS-60 thru Serial # 134487 (1975 1st Design)	22007700		83207 or 89407	.....
		22007750		83207 or 89407	.....
		4975467		83207 or 89407	.....
		4975494		83207 or 89407	.....
1976-78	SE-60 From Serial # 120000 (1976 2nd Design)	22002294		83304	.....
		22007752		83304	.....

Gabriel Part Numbers that appear in BLUE are GasSLX, adjustable shocks.\ Los números de parte Gabriel imprimidos en AZUL son amortiguadores ajustables GasSLX. \ Les numéros de pièce Gabriel imprimés en BLEU sont des amortisseurs ajustables GasSLX.

Gabriel® COMMERCIAL VEHICLE

CHEVROLET TRUCK 6, 60 & 6000 Series (Kodiak) .. cont'd

Year Año Année	Model Modelo Modèle	O.E.M. #	Mount	Front Delantero Avant	Rear Trasero Arrière
1976-78	SE-60 w/Hydraulic Brakes from Serial # 120000 (1975 2nd Design)	22012169 3192892		....	83221 83221
1973-74	SG, SM-60	3192890		85005 or 89430	.....
1973-74	SG, SM-61	4940606		85005 or 89430	.....
1973-74	SG, SM-62	22002293		85005 or 89430	.....
1973-74	SG, SM-63	22007701		85005 or 89430	.....
1973-74	SG, SM-64	22007751		83303	.....
1960-62	Standard and Heavy Duty Truck and School Bus (2 Ton)	.....		.....	83221
1971-72	TDM 4 Cycle Detroit Diesel with Tandem Axle	22012095 4940606		....	85005 or 89430 85005 or 89430
1967-68	TDM 4 Cycle Detroit Diesel with Tandem Axle - Exc. Tilt Cab	22012096 3192892		....	83221 83221
1979-80	W Chassis - 72" BBC Steel Tilt Cab	22002293 22007751		85005 or 89430 83303	....
	Models with O.E.M. Number	88982684 88982686 88982688		83136	..... 85071 85336

65 & 6500 Series (Kodiak)

1990-06	C Chassis - Conventional Cab	15123676 88982682		83136 83136	....
1990-99	C Chassis - Conventional Cab	15588554 22064230		83136 83136	....
1990-99	C Chassis - Conventional Cab With 11000, 13500, 15000 lb Taperleaf Springs	22064231		.....	85324
1990-06	C Chassis - Conventional Cab With 15000, 19000, 21000 lb Multileaf Springs	22064232 15174902		....	85071 85071
1995-06	C Chassis - Conventional Cab With 17850 lb Taperleaf Springs	21998392 88963409		....	85336 85336
1995-99	C Chassis - Conventional Cab With 17850 lb Taperleaf Springs	22064489		.....	85336
1992-99	C Chassis - Conventional Cab With 19000, 21000, 23000 lb Taperleaf Springs (EXC Low Profile Vehicle)	22064233		.....	83136
1983-99	C Chassis - Conventional Cab with 9100 to 17500 lb Rear Axle	22064432		.....	85050
1976-89	C, M Chassis - Conventional Cab	22002294 22007752		83304 83304	....
1975-76	C, M Chassis - Conventional Cab	4975510		83221	.....
1976-89	C, M Chassis - Conventional Cab with 9000 & 12000 lb Axle	22002295 22017530 22017531		83303 83303 83303	....
1975-76	C, M Chassis - Conventional Cab with 9000 & 12000 lb Axle	22007751 4975511		83303 83303	....

Gabriel Part Numbers that appear in BLUE are GasSLX, adjustable shocks.\ Los números de parte Gabriel imprimidos en AZUL son amortiguadores ajustables GasSLX. \
Les numéros de pièce Gabriel imprimés en BLEU sont des amortisseurs ajustables GasSLX.

Gabriel® COMMERCIAL VEHICLE

Year Año Année	Model Modelo Modèle	O.E.M. #	Mount	Front Delantero Avant	Rear Trasero Arrière
CHEVROLET TRUCK 65 & 6500 Series (Kodiak) .. cont'd					
1973-75	C, M Chassis - Conventional Cab with 9000 & 12000 lb Axle	22007751		83303	.....
		22012095		85005 or 89430	.....
		3192890		85005 or 89430	.....
		4940606		85005 or 89430	.....
		4975497		85005 or 89430	.....
1973-75	C, M, S Chassis - Conventional Cab and School Bus	22007750		83207 or 89407	.....
		4975467		83207 or 89407	.....
		4975494		83207 or 89407	.....
1973-80	C, M, S Chassis - Conventional Cab and School Bus - Exc. with 20800 or 23000 lb Rear Axle	22012096		.....	83221
		22012169		.....	83221
		3192892		.....	83221
1973-80	C, M, S Chassis - Conventional Cab and School Bus with 20800 or 23000 lb Rear Axle	22012095		.....	85005 or 89430
		22012166		.....	85005 or 89430
		4940606		.....	85005 or 89430
1973-80	C, S , T Chassis - Conventional & Tilt Cab and School Bus	22002293		85005 or 89430	.....
		22007751		83303	.....
		22012095		85005 or 89430	.....
		3192890		85005 or 89430	.....
		4940606		85005 or 89430	.....
		4975497		85005 or 89430	.....
	Models with O.E.M. Number	88982684		83136	.....
		88982686		.....	85071
		88982688		.....	85336
7, 70 & 7000 Series (Kodiak)					
1966-72	72" BBC Steel Tilt Cab with V-6 2 Cycle Diesel Engine	22012095		85005 or 89430	.....
		3171462		85005 or 89430	.....
		3192890		85005 or 89430	.....
1966-72	72" BBC Steel Tilt Cab with V-6 2 Cycle Diesel Engine with 17201 and 17221 Axle	22012096		.....	83221
		3192892		.....	83221
1966-72	72" BBC Steel Tilt Cab with V-6 2 Cycle Diesel Engine with 19101 and 19201 Axle	4940600		.....	83209 or 89414
1966-72	92" BBC Conventional Cab	3192657		83216	.....
		4940614		83216	.....
		4963854		83216	.....
1966-68	92" BBC Conventional Cab	.....		.....	83221

Gabriel Part Numbers that appear in BLUE are GasSLX, adjustable shocks.\ Los números de parte Gabriel imprimidos en AZUL son amortiguadores ajustables GasSLX. \ Les numéros de pièce Gabriel imprimés en BLEU sont des amortisseurs ajustables GasSLX.

Gabriel® COMMERCIAL VEHICLE

CHEVROLET TRUCK 7, 70 & 7000 Series (Kodiak) .. cont'd

Year Año Année	Model Modelo Modèle	O.E.M. #	Mount	Front Delantero Avant	Rear Trasero Arrière
1963-68	All - Exc. 92" BBC Conventional Cab	.....		.....	83221
		.....		85005 or 89430	.....
1990-99	C Chassis - Conventional Cab				
1990-06	- Front Shock	15123676		83136	.....
		88982682		83136	.....
1990-99	- Front Shock	15588554		83136	.....
		22064230		83136	.....
1990-99	- With 11000, 13500, 15000 lb Taperleaf Springs	22064231		.....	85324
1990-06	- With 15000, 19000, 21000 lb Multileaf Springs	15174902		.....	85071
		22064232		.....	85071
1990-99	- With 19000, 21000, 23000 lb Taperleaf Springs (EXC Low Profile Vehicle)	22064233		.....	83136
1992-06	C Chassis - Conventional Cab with 16900 lb Taperleaf Springs	21998392		.....	85336
		88963409		.....	85336
1992-99	C Chassis - Conventional Cab with 16900 lb Taperleaf Springs	22064489		.....	85336
1983-99	C Chassis - Conventional Cab with 9100 to 17500 lb Rear Axle	22064432		.....	85050
1979-89	C, M Chassis - 97" BBC Conventional Cab	22002294		83304	.....
		22002295		83303	.....
		22007752		83304	.....
		22007753		83303	.....
		22012095		.....	85005 or 89430
		22012166		.....	85005 or 89430
		22017530		83303	.....
		22017531		83303	.....
1966-72	Conventional Cab with Tapered 2-Leaf Softride 11000 lb Rating and F120 Axle (12000 lb)	22046483		85304	.....
		22052336		85304	.....
		3171069		85304	.....
1966-72	Conventional Cab With Tapered 2-Leaf Softride 7000 & 9000 lb Rating and F070, F090, F120 Axle (7000, 9000 & 12000 lb)	3171068		83216	.....
		3192657		83216	.....
		4940614		83216	.....
		4963853		83216	.....
		4963854		83216	.....
1977-80	H, J Chassis - 92" BBC Conventional Cab	4963854		83216	.....
		4984526		83216	.....
1973-80	H, J Chassis - 92" BBC Conventional Cab with V-6, V8 Diesel Engines	4940614		83216	.....
		4963854		83216	.....
1973-80	H, J, M Chassis - 92" & 114" BBC Conventional Cab	2204683		85304	.....
		3171069		85304	.....
1995-99	Models with Hendrickson Air Suspension (Stamping number 47902-13)	12474915		.....	83122 or 89406
		15963161		.....	83122 or 89406
1996-99	Models with Hendrickson Air Suspension (Stamping number 47902-29)	12474917		.....	83121
		15740554		.....	83121

Gabriel Part Numbers that appear in BLUE are GasSLX, adjustable shocks.\ Los números de parte Gabriel imprimidos en AZUL son amortiguadores ajustables GasSLX. \
Les numéros de pièce Gabriel imprimés en BLEU sont des amortisseurs ajustables GasSLX.

Gabriel® COMMERCIAL VEHICLE

Year Año Année	Model Modelo Modèle	O.E.M. #	Mount	Front Delantero Avant	Rear Trasero Arrière
CHEVROLET TRUCK 7, 70 & 7000 Series (Kodiak) .. cont'd					
1973-80	R Chassis - Rear Engine Bus	22012090		85308 or 89422	.....
		5552451		85308 or 89422	.....
		5552456		.....	85307
		5552552		.....	85303
1983-84	S7T042 Forward Control Chassis w/17000, 18500, 21000, 23000 lb Rear Axle	22012095		.....	85005 or 89430
		22012166		.....	85005 or 89430
1960-62	Standard and Heavy Duty Truck and School Bus - Exc. I-Beam Axles and Tandem Rear	.....		.....	83221
1983-84	STT042 Forward Control Chassis	22012065		85304	.....
		3171069		85304	.....
1973-80	T, W Chassis - 72" BBC Steel Tilt Cab (4 x 2) with V-6 Diesel Engine	22007751		83303	.....
		22012095		85005 or 89430	.....
		4940606		85005 or 89430	.....
		4975497		85005 or 89430	.....
1973-80	T, W Chassis - 72" BBC Steel Tilt Cab with V-6 Gas Engine	22012091		85303	.....
		5552452		85303	.....
1962	Truck and School Bus with I-Beam Axle -Exc. Tandem Rear	.....		.....	83221
		.....		85302 or 89420	.....
	Models with O.E.M. Number	88982684		83136	.....
		88982686		.....	85071
		88982688		.....	85336
8, 80 & 8000 Series					
1966-69	72" BBC Steel Tilt Cab	5544060		85302 or 89420	.....
1966-72	92" BBC Conventional Cab	3171068		83216	.....
		3192657		83216	.....
		4940614		83216	.....
		4963853		83216	.....
		4963854		83216	.....
1966-68	92" BBC Conventional Cab	.....		83216	.....
		.....		.....	83221
1966-72	92" BBC Conventional Cab with 7000 & 9000 lb Axles - Exc. 2-Leaf Softride	22046483		85304	.....
		22052336		85304	.....
		3171069		85304	.....
1963-68	All - Exc. 92" BBC Conventional Cab	.....		85005 or 89430	.....
		.....		.....	83221
1979-82	H, J Chassis - 92" BBC Conventional Cab 4 x 2 with Air Suspension	22012065		.....	85304
		22046483		.....	85304
		22052336		.....	85304
		3171069		.....	85304
1979-82	H, J Chassis - 92" BBC Conventional Cab 4 x 2 with F090, F120 Axle	22012065		.....	85304
		22046483		.....	85304
		22052336		.....	85304
		3171069		.....	85304
1978-81	H, J Chassis - 92" BBC Conventional Cab	4963854		83216	.....
		4984526		83216	.....

Gabriel Part Numbers that appear in BLUE are GasSLX, adjustable shocks.\ Los números de parte Gabriel imprimidos en AZUL son amortiguadores ajustables GasSLX. \ Les numéros de pièce Gabriel imprimés en BLEU sont des amortisseurs ajustables GasSLX.

Gabriel® COMMERCIAL VEHICLE

CHEVROLET TRUCK 8, 80 & 8000 Series .. cont'd

Year Año Année	Model Modelo Modèle	O.E.M. #	Mount	Front Delantero Avant	Rear Trasero Arrière
1973-81	H, J Chassis - 92" BBC Conventional Cab with V-6 Gas Engine	4940614		83216	.....
		4963854		83216	.....
1973-86	H, J, M Chassis - 92" & 114" BBC Conventional Cab	22046483		85304	.....
		22052336		85304	.....
		3171069		85304	.....
1973-80	R Chassis - Rear Engine Bus	22012090		85308 or 89422	.....
		22012091		.....	85303
		5552451		85308 or 89422	.....
		5552452		.....	85303
		5552456		.....	85307
1960-62	Standard and Heavy Duty Truck and School Bus - Exc. I-Beam Axles and Tandem Rear	.....		.....	83221
1970-80	T, W Chassis - 72" BBC Steel Tilt Cab with V-6 Gas Engine	22012091		85303	.....
		5552452		85303	.....
1962	Truck and School Bus with I-Beam Axle - Exc. Tandem Rear	.....		.....	83221
		.....		85302 or 89420	.....

9000 Series

1970-72	54" BBC Aluminum Tilt Cab 6 x 4	22046483		85304	85304
		22052336		85304	85304
		3171069		85304	85304
1970-72	92" & 114" BBC Conventional Cab - Exc. 6 x 4	4940614		83216	.....
		4963854		83216	.....
1970-72	92" & 114" BBC Conventional Cab 6 x 4	22046483		85304	85304
		22052336		85304	85304
		3171069		85304	85304
1970-86	D, F Chassis - 54" BBC Aluminum Tilt Cab	22012065		85304	.....
		22046483		85304	.....
		22052336		85304	.....
		3171069		85304	.....
1970-86	D, F Chassis - 54" BBC Aluminum Tilt Cab with Rear GM Air Ride Suspension (4 Req'd)	22012065		.....	85304
		22046483		.....	85304
		22052336		.....	85304
		3171069		.....	85304
1970-86	H, J Chassis - 92" BBC Conventional Cab	22046483		85304	.....
		22052336		85304	.....
		3171069		85304	.....
1977-86	M, N Chassis - 114" BBC Conventional & 108" BBC Aluminum Conventional Cab with Rear GM Air-Ride Suspension (4 Req'd)	22046483		.....	85304
		22052336		.....	85304
		3171069		.....	85304
1977-86	M,N Chassis - 114" BBC Conventional & 108" BBC Aluminum Conventional Cab	22012065		85304	.....
		22046483		85304	.....
		22052336		85304	.....
		3171069		85304	.....
1970-80	T, W Chassis - 72" BBC Steel Tilt Cab	22012091		85303	.....
		5552452		85303	.....

Gabriel Part Numbers that appear in BLUE are GasSLX, adjustable shocks.\ Los números de parte Gabriel imprimidos en AZUL son amortiguadores ajustables GasSLX. \
Les numéros de pièce Gabriel imprimés en BLEU sont des amortisseurs ajustables GasSLX.

Gabriel® COMMERCIAL VEHICLE

Year Año Année	Model Modelo Modèle	O.E.M. #	Mount	Front Delantero Avant	Rear Trasero Arrière

CHEVROLET TRUCK .. cont'd

B - Series

1990-98	B7 School Bus Chassis				
1990-98	- With 11000, 13500, 15000 lb Taperleaf Springs	22064231		.....	85324
1990-06	- With 15000, 19000, 21000 lb Multileaf Springs	15174902		.....	85071
		22064232		.....	85071
1990-06	Models with O.E.M. Number	15123676		83136	.....
		88982682		83136	.....
1993-98	Models with O.E.M. Number	22064231		.....	85324
1990-98	Models with O.E.M. Number	15588554		83136	.....
		22064230		83136	.....

C - Series (C5500, C6500, C7500, C8500)

1997-	Conventional Cab				
1997-	- Front Shock	15123676		83136	.....
		15588554		83136	.....
		22064230		83136	.....
		88982682		83136	.....
1997-	- With 11000, 13500, 15000 lb Taperleaf Springs	22064231		.....	85324
1997-	- With 15000, 19000, 21000 lb Multileaf Springs	15174902		.....	85071
		22064232		.....	85071
1997-	- With 16900 or 17850 lb Taperleaf Springs	21998392		.....	85336
		22064489		.....	85336
		88963409		.....	85336
1997-	- With 19000, 21000, 23000 lb Taperleaf Springs (EXC Low Profile Vehicle)	22064233		.....	83136

P - Series

1992-96	Motorhome Chassis	22064231		.....	85324
		22064233		.....	83136

T - Series (T5500, T6500, T7500, T8500)

1997-	FL1 Tilt Cab with 8100 lb Axle	22064804		83136	.....
		22064805		83136	.....
		22165187		83136	.....
		22165188		83136	.....
1997-	FL2 Tilt Cab with 5000 to 11000 lb Axle	22064807		83136	.....
		22166442		83136	.....
1997-	FL3 Tilt Cab with 14575 lb Axle	22064806		83136	.....
		22165189		83136	.....
1999	Models with Hendrickson Air Suspension (Stamping number 47902-13)	12474915		.....	83122 or 89406
		15963161		.....	83122 or 89406
	Tilt Cab				
1990-99	- With 11000, 13500, 15000 lb Taperleaf Springs	22064231		.....	85324
1990-06	- With 15000, 19000, 21000 lb Multileaf Springs	15174902		.....	85071
		22064232		.....	85071
1992-06	- With 16900 lb Taperleaf Springs	21998392		.....	85336
		88963409		.....	85336
1992-99	- With 16900 lb Taperleaf Springs	22064489		.....	85336
1992-99	- With 19000, 21000, 23000 lb Taperleaf Springs (EXC Low Profile Veh.)	22064233		.....	83136

Gabriel Part Numbers that appear in BLUE are GasSLX, adjustable shocks.\ Los números de parte Gabriel imprimidos en AZUL son amortiguadores ajustables GasSLX. \ Les numéros de pièce Gabriel imprimés en BLEU sont des amortisseurs ajustables GasSLX.

Gabriel® COMMERCIAL VEHICLE

CHEVROLET TRUCK .. cont'd

W - Series (Isuzu)

Year Año Année	Model Modelo Modèle	O.E.M. #	Mount	Front Delantero Avant	Rear Trasero Arrière
1983-95	W4 Series	9-51630-666-0		.....	85012 or 89413
		9-51630-666-2		.....	85012 or 89413
1986-90	W4 Series	8-94454-986-0		G60177	.....
		8-94454-987-0		G60177	.....
		9-51630-647-1		G60177	.....
1989-92	W4 Series Flatlow	9-51630-666-0		.....	85012 or 89413
		9-51630-666-2		.....	85012 or 89413
1989-90	W4 Series Flatlow	9-51630-647-1		G60177	.....
86-Aug95	W4 Series with 11000 lb Suspension	97083027		G60177	.....
1987-Sept95	W4 Series with 13000 lb Suspension	97083029		G60177	.....
Sep88 - Aug92	W4 Series with 13000 lb Suspension	94454987		G60177	.....
Sep92-	W4 Series with 13000 lb Suspension	97083029		G60177	.....
1988-97	W5 Series	1-51630-217-0		83114	.....
		1-51630-217-1		83114	.....
		1-51630-219-1		83114	.....
1986-91	W6 Series	1-51630-168-1		G60107	.....
		1-51630-217-0		83114	.....
		1-51630-217-1		83114	.....
	Models with O.E.M. Number	94033786		83114	.....
		94051090		83114	.....
		94057593		83114	.....
		97201960		G60177	.....
	Models with O.E.M. Number	15642943		.....	83136
		22099889		.....	85336
	Additional O.E.M. Interchanges	22007703		83303	
		22012067		85700	
		22012079		85701	
		22012082		85702	
		22012083		85711	
		22012090		85308 or 89422	
		22012091		85303	
		22012114		85700	
		22012131		85711	
		22017530		83303	
		22024062		85701	
		22024673		85710	
		22045526		85702	
		22046481		85702	
		22046485		85710	
		22046499		85710	
		22052014		85702	
		22052424		85710	
		3171696		85307	
		3172948		85303	
		3175509		85735	

Gabriel Part Numbers that appear in BLUE are GasSLX, adjustable shocks.\ Los números de parte Gabriel imprimidos en AZUL son amortiguadores ajustables GasSLX. \
Les numéros de pièce Gabriel imprimés en BLEU sont des amortisseurs ajustables GasSLX.

Gabriel® COMMERCIAL VEHICLE

Year Año Année	Model Modelo Modèle	O.E.M. #	Mount	Front Delantero Avant	Rear Trasero Arrière
	CHEVROLET TRUCK .. cont'd				
	Additional O.E.M. Interchanges	3178157		85700	
		3178233		85734	
		3178507		85700	
		3178995		85700	
		3188626		85300 or 89419	
		3188729		85303	
		4939852		85308 or 89422	
		4939967		85308 or 89422	
		4940601		83216	
		4940627		83203 or 89436	
		4940640		83216	
		4940650		83207 or 89407	
		4940654		83216	
		4940660		83207 or 89407	
		4963844		85307	
		4963853		83216	
		4964853		83217	
		4974401		85700	
		4975429		85300 or 89419	
		4975479		83400	
		4975480		83400	
		4975515		85701	
		4975516		85702	
		4975518		85704	
		4975538		85700	
		4975549		83216	
		4975550		85702	
		5171068		83216	
		5316784		85700	
		5316791		83219	
		5316792		85305	
		5316793		85305	
		5321920		85307	
		5321929		85307	
		5348631		83203 or 89436	
		5352858		85305	
		5353054		85303	
		5355798		85307	
		5357955		85300 or 89419	
		5357956		85734	
		5357959		85300 or 89419	
		5361994		85734	
		5374779		85308 or 89422	
		5374999		85307	
		5385939		85307	
		5392387		85303	
		5394448		85305	
		5394467		85305	
		5394468		85735	
		5455798		85307	
		5513489		83216	
		5513716		85304	
		5516459		85305	
		5522781		85735	

Gabriel Part Numbers that appear in BLUE are GasSLX, adjustable shocks.\ Los números de parte Gabriel imprimidos en AZUL son amortiguadores ajustables GasSLX. \ Les numéros de pièce Gabriel imprimés en BLEU sont des amortisseurs ajustables GasSLX.

Gabriel COMMERCIAL VEHICLE

Year Año Année	Model Modelo Modèle	O.E.M. #	Mount	Front Delantero Avant	Rear Trasero Arrière

CHEVROLET TRUCK .. cont'd

	Additional O.E.M. Interchanges	5522794		85308 or 89422	
		5522818		85305	
		5527001		85300 or 89419	
		5527271		85700	
		5527272		85700	
		5527606		85305	
		5531027		85301	
		5531435		85307	
		5531436		85307	
		5531437		85307	
		5532026		85304	
		5532425		83207 or 89407	
		5532433		83207 or 89407	
		5532675		85307	
		5534430		85303	
		5534439		85304	
		5534447		85303	
		5544112		83216	
		5544581		85302 or 89420	
		5544716		85304	
		5544717		85304	
		5544812		83308	
		5544818		85735	
		5549899		83207 or 89407	
		5549924		85700	
		5549925		85304	
		5552111		85304	
		5552112		85307	
		5552114		83216	
		5552205		83217	
		5552206		83214	
		5552207		83217	
		5552208		83217	
		5552209		83215	
		5552210		85308 or 89422	
		5552244		85308 or 89422	
		5552285		83214	
		5552286		83217	
		5552287		83217	
		5552288		83217	
		5552453		85301	
		5552527		85735	
		5554184		85302 or 89420	
		5554589		85307	
		5554596		85303	
		5554814		85302 or 89420	
		5554959		83401	
		5554995		85305	
		5559363		83203 or 89436	
		5585939		85307	
		684280		83209 or 89414	
		97-2210-00153		85701	
		97-2210-00164		85708	
		97-2210-00170		85733	

Gabriel Part Numbers that appear in BLUE are GasSLX, adjustable shocks.\ Los números de parte Gabriel imprimidos en AZUL son amortiguadores ajustables GasSLX. \
Les numéros de pièce Gabriel imprimés en BLEU sont des amortisseurs ajustables GasSLX.

Gabriel® COMMERCIAL VEHICLE

Year Año Année	Model Modelo Modèle	O.E.M. #	Mount	Front Delantero Avant	Rear Trasero Arrière
CLARK EQUIPMENT					
	Model 130885 (Air Suspension)	5532675		.....	85307
	Ross Carrier	355778		85315	85315
		680042		85301	85301
CONTINENTAL TRAILWAYS- EAGLE INT'L					
	Bus	6-05-5		85307	85307
	Silver Eagle	01-0100-905		85303	85303
		5394467		85305	85305
		680091		85303	85303
		70039		85303	85303
		70041		85305	85305
	Models with O.E.M. Number	01-0100-020		85307	85307
		5532026		85304	85304
CRANE CARRIER					
	Models with O.E.M. Number	277A-1		85307	.....
		277A-13		85302 or 89420	.....
		277A-14		85304	.....
		277A-8		85303	.....
		277A-9		85307	.....
		680091		85303	.....
	Additional O.E.M. Interchanges	277A-12		85304	
		680088		85713	
CROWN COACH					
	All with Steel Spring Suspension	3188729		85303	.....
		5532026		85304	85304
	Models with O.E.M. Number	5532036		85734	85734
CUNHA PRODUCTS OHD					
	Truck Dollies	CP-5222		.....	85315
DIAMOND T					
	Models with O.E.M. Number	5549925		85304	.....
DIAMOND- REO					
	All w/Velvet Ride Suspension	.....		.....	85307
	C054, C088 w/FH or FL Axle	.....		85307	.....
	C054, C088, C114, C116 w/FF Axle	220-55-1		83214	.....
		220-55-6		83214	.....
	C090, C090D, C101	220-55-2		85304	.....
		220-55-7		85304	.....
	C114, C116 w/FH or FL Axle	220-55-2		85304	.....
		220-55-7		85304	.....
	CF Series	220-55-8		83217	.....
	DC101	220-55-2		85304	.....
		220-55-7		85304	.....

Gabriel Part Numbers that appear in BLUE are GasSLX, adjustable shocks.\ Los números de parte Gabriel imprimidos en AZUL son amortiguadores ajustables GasSLX. \ Les numéros de pièce Gabriel imprimés en BLEU sont des amortisseurs ajustables GasSLX.

Gabriel® COMMERCIAL VEHICLE

Year Año Année	Model Modelo Modèle	O.E.M. #	Mount	Front Delantero Avant	Rear Trasero Arrière
DINA BUS					
	Marco Polo Viaggio GV 1000				
	- Drive Axle	39390339-6		.....	85302 or 89420
	- Front Shock	39380353-6		85716	.....
	- Tag Axle	39390340-4		.....	85716
DODGE TRUCK					
D Series- Conventional Cab 4 x 2					
1974-78	D-500, D-600, D-700, D-800	3633643		.....	G60028
1973	D-500, D-600, D-800	2516009		.....	G60028
LN & LNT- Conventional Cab					
1964-72	LN, LV Series	2516009		.....	G60028
LNT, LVT, NLT, VLT- Tilt Cab 6 x 4					
1964-73	LNT, LVT Series	2516009		.....	G60028
LS & LT- Steel Tilt Cab					
1973-75	LS-1000, LT-1000	2516009		.....	G60028
Motorhome Chassis					
1973-81	M & R-300, 400, 500 Motorhome Chassis	3638112 3638631		..... G60119	G60028 .....
1963-72	M-300, M-375 & R-375 Motorhome Chassis	2961043 3633744		....	G60028 G60028
1977-81	M-6 Motorhome Chassis	3638112 4036892		..... G60119	G60028 .....
P Series - Forward Control					
1972-82	P-300	.....		.....	G60028
1963-78	P-400	.....		.....	G60028
1963-71	PC-500 and PC-600, PD-500 and PD-600	.....		.....	G60028
School Buses					
1961-71	S-400, S-500, S-600	.....		.....	G60028
1972-73	S-500, S-600	2516009		.....	G60028
1974-78	S-600, S-700	3633643		.....	G60028
W- Series And Power Wagons					
1961-72	W-500, WT-500 Series	.....		.....	G60028
1974-78	W-600 Series	3633643		.....	G60028
1973	W-600 Series	2516009 2960707		..... G60028	G60028 .....
DUPLEX TRUCK					
	Models with O.E.M. Number	59024 7604-3371		83204 83204	83204 83204

Gabriel Part Numbers that appear in BLUE are GasSLX, adjustable shocks.\ Los números de parte Gabriel imprimidos en AZUL son amortiguadores ajustables GasSLX. \
Les numéros de pièce Gabriel imprimés en BLEU sont des amortisseurs ajustables GasSLX.

Gabriel® COMMERCIAL VEHICLE

Year Año Année	Model Modelo Modèle	O.E.M. #	Mount	Front Delantero Avant	Rear Trasero Arrière
DURA SUSPENSION					
	Models with O.E.M. Number	1080099		.....	83203 or 89436
		12866		.....	83207 or 89407
		59024		.....	83204
		59030		.....	83203 or 89436
		665133		.....	83203 or 89436
		665267		.....	85029
		7604-3371		.....	83204
		A-2212		.....	85029
EAGLE MOTOR COACH					
	Models with O.E.M. Number	01-0100-905		85303	85303
		014-0100-905		85308 or 89422	.....
		101364		85305	85305
		154-0100-514		85314 or 89425	.....
		5394467		85305	85305
		680091		85303	85303
		70041		85305	85305
	Additional O.E.M. Interchanges	0140100-905		85308 or 89422	
		12B-5-1		85700	
		12J-5-10		85733	
		690060		85713	
EAST TRAILER					
	Model with Hendrickson HT-230 Air Suspension	A-20002		.....	85000 or 89436
		A-20126		.....	85323 or 89436
FLUIDRIVE					
	Models T950-1200, -1400, -1700	2697		.....	85712
FLXIBLE BUS					
	29 Passenger & Vista Coach	.....		83217	83217
	2-Level Intercity Bus	.....		85736	85736
	City Bus - 51 Passenger	6-05-1		85736	.....
		6-05-2		85736	.....
		6-05-3		85736	.....
		6-05-4		85736	.....
		6-05-5		85307	.....
		6-05-6		85736	.....
		6-05-7		85736	.....
		6-05-8		85736	.....

Gabriel Part Numbers that appear in BLUE are GasSLX, adjustable shocks.\ Los números de parte Gabriel imprimidos en AZUL son amortiguadores ajustables GasSLX. \ Les numéros de pièce Gabriel imprimés en BLEU sont des amortisseurs ajustables GasSLX.

Gabriel® COMMERCIAL VEHICLE

FLXIBLE BUS .. cont'd

Year Año Année	Model Modelo Modèle	O.E.M. #	Mount	Front Delantero Avant	Rear Trasero Arrière
	City Bus - 51 Passenger with Rubber Torsion Suspension	6-05-1		.....	85736
		6-05-2		.....	85736
		6-05-3		.....	85736
		6-05-4		.....	85736
		6-05-5		.....	85307
		6-05-6		.....	85736
		6-05-7		.....	85736
		6-05-8		.....	85736
	CNG Bus (Natural Gas)	87-2519-00002		85731	.....
		87-2519-00004		85731	.....
		87-2520-00002		.....	85730
		87-2520-00004		.....	85730
		97-2201-00008		85731	.....
		97-2210-00010		.....	85730
	Model 870 Flex Bus, Metro	22024062		85701	.....
		22024506		85703	.....
		22025066		85703	.....
		4975518		.....	85704
		74412		.....	85704
		87-2519-00001		85703	.....
		87-2519-00003		85703	.....
		87-2520-00001		.....	85704
		87-2520-00003		.....	85704
		97-2201-00003		85703	.....
		97-2201-00005		85703	.....
		97-2201-00006		85703	.....
		97-2201-00007		85703	.....
		97-2201-00009		85703	.....
		97-2210-00001		.....	85704
		97-2210-00003		.....	85704
		97-2210-00004		.....	85704
		97-2210-00005		.....	85704
		97-2210-00006		.....	85704
		97-2210-00009		.....	85704
		97-2210-00011		.....	85704
	Models with O.E.M. Number	22012067		85700	85700
		22012114		85700	85700
		22024061		.....	85704
		22025067		.....	85704
		22025305		.....	85704
		3166657		85700	85700
		3192333		85700	85700
		6-05-13		.....	85304
		6-05-9		85304	.....
		6-367-12		85700	85700
		6-367-14		85700	85700
		6-367-16		85700	85700
		6-367-8		85700	85700
		695125		.....	85704
		87-2519-00001		85703	.....
		87-2519-00002		85731	.....
		87-2519-00003		85703	.....
		87-2519-00004		85731	.....
		97-2201-00001		85703	.....

Gabriel Part Numbers that appear in BLUE are GasSLX, adjustable shocks.\ Los números de parte Gabriel imprimidos en AZUL son amortiguadores ajustables GasSLX. \
Les numéros de pièce Gabriel imprimés en BLEU sont des amortisseurs ajustables GasSLX.

Gabriel® COMMERCIAL VEHICLE

Year Año Année	Model Modelo Modèle	O.E.M. #	Mount	Front Delantero Avant	Rear Trasero Arrière
FLXIBLE BUS .. cont'd					
	Models with O.E.M. Number	97-2201-00002		85703	.....
		97-2201-00004		85703	.....
		97-2201-00151		85700	85700
		97-2210-00170		85733	85733
		97-9999-02592		85710	.....
	Additional O.E.M. Interchanges	015813		85708	
		06-0367-00151		85700	
		06-0367-00156		85702	
		06-0367-00157		85701	
		48-1-239		85736	
		48-1-241		85712	
		6-05-10		85734	
		6-367-1		85711	
		6-367-11		85711	
		6-367-17		85700	
		6-367-2		85736	
		6-367-3		85304	
		6-367-4		83217	
		6-367-6		85711	
		6-367-7		85305	
		6-367-9		85711	
		680155		85712	
		97-2210-00153		85701	
		97-2210-00156		85702	
		97-2210-00156		85702	
		97-2210-00157		85708	
		97-2210-00160		85705	
		97-2210-00162		85701	
		97-2210-00164		85708	
		97-9999-00732		85707	
		97-9999-02514		85700	
		97-9999-02515		85702	
		97-9999-02516		85701	
		97-9999-02519		85707	
		97-9999-02595		85313	
		97-9999-02632		85711	
		97-9999-02633		85311 or 89424	
		97-9999-02634		85733	
		97-9999-02635		85718	
		97-9999-02636		85716	
		97-9999-807		85307	
FLYER INDUSTRIES					
	Coaches with Low Floor	009863		85722	.....
		15813		.....	85708
	Additional O.E.M. Interchanges	01595		85711	
		22012067		85700	
		22012114		85700	
		3166657		85700	
		3192333		85700	
		4975501		85700	
		4975552		85711	
		592-6568		85700	
		5979574		85700	

Gabriel Part Numbers that appear in BLUE are GasSLX, adjustable shocks.\ Los números de parte Gabriel imprimidos en AZUL son amortiguadores ajustables GasSLX. \ Les numéros de pièce Gabriel imprimés en BLEU sont des amortisseurs ajustables GasSLX.

Gabriel® COMMERCIAL VEHICLE

Year Año Année	Model Modelo Modèle	O.E.M. #	Mount	Front Delantero Avant	Rear Trasero Arrière

FORD

AeroMax (A, AT, AAT, 8500, 9500) Series

1996	8000 Series with 12000 or 13000 lb Axles	F6HT-18045-LA		85376	.....
1996	8000 Series with 16000 lb. Multileaf Spring	F6HT-18045-AA		85054 or 89438	.....
1996-97	9500 (113" & 122" BBC) Series with 10000 lb Axle and 54" Multileaf Spring	F6HT-18045-KA		83200	.....
1996-	9500 (113" & 122" BBC) Series with 12000 or 13200 lb Axle and 54" Multileaf Spring	F6HT-18045-BC		85047 or 89435	.....
1996-97	9500 (113" & 122" BBC) Series with 8500 or 9000 lb Axle and 54" Taperleaf Spring	F6HT-18045-HC		85054 or 89438	.....
1996-	All Models with 10000 lb or 12000 lb Axle and 54" Taperleaf Spring	F6HT-18045-AC		85054 or 89438	.....
		F6HZ-18124-A		85054 or 89438	.....
1996-	All with 12000 lb, 13000 lb or 14600 lb Axle and 60" Taperleaf Spring	F6HT-18045-EB		85055 or 89439	.....
		F6HT-18045-EC		85055 or 89439	.....
		F6HZ-18124-D		85055 or 89439	.....
		F6HZ-18124-E		85055 or 89439	.....
		F6HZ-18124-F		85055 or 89439	.....
1996-	All with 13200 lb or 14600 lb Axle and 54" Taperleaf Spring	F6HT-18045-GB		85030 or 89440	.....
		F6HT-18045-GC		85030 or 89440	.....
		F6HZ-18124-G		85054 or 89438	.....
1996-	All with 21000 lb or 23000 lb Axle and 46" Taperleaf spring	F5HZ-18125-B		.....	85001 or 89410
1996-	All with 23000 lb Axle and 52" Taperleaf spring	F5HZ-18125-A		.....	85314 or 89425
1996-97	All with Hendrickson 40LH Model Tandem Axle	57241-2		.....	83109
		F6HT-18080-DA		.....	83109
		F6HZ-18125-B		.....	83109
1996-97	All with Hendrickson HAS-400, HA-210 or HA-230 Air Suspension	47902-28		.....	85013 or 89414
		F6HZ-18080-FC		.....	85013 or 89414
		F6HZ-18125-D		.....	85013 or 89414
1996-97	All with Neway AD-123 Air Suspension	90045068		.....	89441
		F6HZ-18125-C		.....	89441
1996-97	With Neway AD-246 Air Suspension	90045099		.....	85906
		90045132		.....	85909

B - Series - Bus Cowl Chassis

1970-79	B - 500, B - 600, B - 700, B - 750	D2TF-18045-GA		83308	.....
		D7HT-18045-GA		83308	.....
1961-79	B - 500, B - 600, B - 700, B - 750	D2TF-18080-HA		.....	83225
		D7HT-18080-BA		.....	83225
1961-69	B - 500, B - 600, B - 700, B - 750 with 4000, 4700 and 5000 lb Axle	.....		83400	.....
1961-69	B - 500, B - 600, B - 700, B - 750 with 6000 & 7000 lb Axle	C2TA-18045-A		83216	.....

Gabriel Part Numbers that appear in BLUE are GasSLX, adjustable shocks.\ Los números de parte Gabriel imprimidos en AZUL son amortiguadores ajustables GasSLX. \
Les numéros de pièce Gabriel imprimés en BLEU sont des amortisseurs ajustables GasSLX.

Gabriel® COMMERCIAL VEHICLE

Year Año Année	Model Modelo Modèle	O.E.M. #	Mount	Front Delantero Avant	Rear Trasero Arrière
FORD B - Series - Bus Cowl Chassis .. cont'd					
1980-96	B - 600, B - 700, B - 800, B - 7000	D7HT-18080-AA		.....	83215
		D7HT-18080-DA		.....	83215
		E0HT-18045-AA		83309 or 89446	.....
		E0HT-18045-AB		83309 or 89446	.....
		E0HT-18080-AA		.....	83215
		F1HT-18045-AA		83309 or 89446	.....
1986-90	B - 600, B - 700, B - 800, B - 7000	E0HT-18080-AA		.....	83215
1977-79	B - 600, B - 750, with 18500 lb Axle	D7HT-18080-AA		.....	83215
		D7HT-18080-DA		.....	83215
C & CT Series - Tilt Cab					
1971-73	C-500, C-550, C-600, C-650, C-700, C-750 with 6000 & 7000 lb Axle	D1TF-18045-LA		83312 or 89409	.....
1964-67	C-550, C-600 with 6000 lb Axle - and Power Steering	C2TA-18045-A		83216	.....
1964-67	C-550, C-600 with 6000 lb Axle - Exc. with Power Steering	C6PF-18077-A		G60021	.....
1964-67	C-550, C-600, C-650, C-700, C-750	C6PF-18077-F		.....	83225
1967-69	C-600, C-650, C-700, C-750, C-800, C-850, C-1000 with 7000, 9000, 11000, 12000,15000 lb Axles - Exc. with 175" Wheel Base	D2HF-18045-CA		83308	.....
1967-71	C-600, C-650, C-700, C-750, C-800, C-850, C-1000 with 7000, 9000, 11000, 12000,15000 lb Axles and 175" Wheel Base	C8HA-18045-A		83312 or 89409	.....
1980-90	C-600, C-700, C-7000, C-800, C-8000, CT-800, CT-8000 with 3100 lb Spring and 7000 lb Axle	D7HT-18045-JA		83308	.....
1976-79	C-600, C-700, C-750, C-800, C-900, CT-800, CT-900	D2EF-18045-AA		83312 or 89409	.....
		D7KF-18045-EA		83312 or 89409	.....
1980-90	C-600, C-700, C-800, C-7000, CT-800, CT-8000 with 4040, 5040 lb Springs and 7000, 9000, 12000 lb Axles	D2EF-18045-AA		83312 or 89409	.....
1964-66	C700/1100, CT-700/1100 with 7000, 9000, 11000, 15000 lb Axles	D2HF-18045-CA		83308	.....
1972-79	C-750, C-800, C-850, C-900, CT-750, CT-800, CT-850, CT-900 with 9000, 11000, 12000 & 15000 lb Axle	D2KF-18045-AA		83312 or 89409	.....
1972-75	C-800, C-850, C-900, CT-800, CT-850, CT-900 with 11000, 12000 lb Axle	D1TF-18045-LA		83312 or 89409	.....
1969-71	C-800, C-850, C-900, CT-800, CT-850, CT-900, CT-950 with 9000, 11000, 12000 & 15000 lb Axle	C8HA-18045-A		83312 or 89409	.....
CF Series (Brazilian Built)					
1986-89	CF - 600, CF - 700	E5HT-18045-AA		85301	.....
		E5HT-18080-DA		.....	85315
		E5HT-18080-EA		.....	85315
1992-97	CF-7000, CF-8000 or CFT-8000 Series	F6HT-18045-LA		85376	.....
1996-97	CF-7000, CF-8000 or CFT-8000 Series with 16000 lb. Multileaf Spring	F6HT-18045-AA		85054 or 89438	.....
1986-97	CF-7000, CF-8000 with 12000 lb or 13000 lb Axle	.....		.....	85302 or 89420
		87HU-18045-AA		85301	.....
		E5HT-18045-AA		85301	.....
		E6HZ-18124-A		85301	.....
		E7HZ-18124-A		85301	.....

Gabriel Part Numbers that appear in BLUE are GasSLX, adjustable shocks.\ Los números de parte Gabriel imprimidos en AZUL son amortiguadores ajustables GasSLX. \ Les numéros de pièce Gabriel imprimés en BLEU sont des amortisseurs ajustables GasSLX.

Gabriel COMMERCIAL VEHICLE

Year Año Année	Model Modelo Modèle	O.E.M. #	Mount	Front Delantero Avant	Rear Trasero Arrière

FORD CF Series (Brazilian Built) .. cont'd

1992-97	CF-7000, CF-8000 with 9000 lb Axle	F2HT-18045-BA F2HT-18045-CA F2HZ-18124-A		85376 85376 85376	....

CL & CLT Series - Highway Tractor Tilt Cab

1978-89	CL-9000, CLT-9000	D7HT-18045-NA		85301	.....
1978-89	CL-9000, CLT-9000 with Cab Suspension Unit (4 req'd)	D8HT-18A160-AB		.....	.....
1990-91	CL-9000, CLT-9000 with Multileaf Spring	F1HT-18045-NA		85040	.....
1978-89	CL-9000, CLT-9000 with Rear Tandem Axle with Neway Suspension	D7HA-18080-AA		.....	83123 or 89405
1978-89	CL-9000, CLT-9000 with Single Rear Axle Suspension	D4HA-18080-AA		.....	83209 or 89414
	Models with Hendrickson Rear Air Suspension	47902-13		.....	83122 or 89406
	Models with O.E.M. Number	D4HA-18080-AA		.....	83209 or 89414

F Series - Conventional Cab

1964-66	F-1000 Diesel with 11000, 12000 lb Axles	C1TT-18045-D		G60007	.....
1964-66	F-1000 with 15000 lb Axle	C1TT-18045-D		G60007	.....
1970-77	F-500	D2HT-18045-GA D2TF-18045-GA		83308 83308	....
1964-77	F-500	C7PF-18077-A D2TF-18080-HA		....	83225 83225
1967-69	F-500	C8TA-18045-AA		G60023	.....
1964-69	F-500	C2TA-18045-A		83216	.....
1964-79	F-600 (2 x 4), F-650, F-700, F-750	C7PF-18077-A D2TF-18080-HA D7HT-18080-BA		....	83225 83225 83225
1971-79	F-600 (4 x 4)	D2HT-18045-GA D2TF-18045-GA		83308 83308	....
1980-94	F-600, F-6000, F-700, F-7000, F-800, F-8000, FT-700, FT-800, FT-8000 - Exc. 9000 lb Axle with H.D. Suspension & 12000 lb Axle	E0HT-18045-AA E0HT-18045-AB		83309 or 89446 83309 or 89446	....
1983-89	F-600, F-6000, F-700, F-7000, F-800, F-8000, FT-700, FT-800, FT-8000 with 9000 lb Axle with H.D. Suspension & 12000 lb Axle	D2HF-18045-AA D7HT-18045-CA		83314 83314	....
1970-79	F-600, F-650, F-700, F-750 with 5500, 6000, 7000 & 9000 lb Axles	D2HT-18045-GA D2TF-18045-GA		83308 83308	....
1967-69	F-600, F-650, F-700, F-750 with 5500, 6000, 7000 & 9000 lb Axles	C8TA-18045-AA		G60023	.....
1964-67	F-600, F-700, F-750	C7PF-18077-A		.....	83225
1964-69	F-600, F-700, F-750 with 6000 & 7000 Axle	C2TA-18045-A		83216	.....
1986-90	F-600, F-700, F-800	AX-310 E6HT-18080-AA E6HZ-18125-D		....	83215 83215 83215
1980-90	F-600, F-700, F-800 with 13000 & 15000 lb Rear Axle	D7HT-18080-BA		.....	83225
1980-90	F-600, F-700, F-800 with 17000 & 18000 lb Rear Axle	D7HF-18080-AA D7HT-18080-DA		....	83215 83215
1990	F-600, F-700, F-800, FT-800, FT-900, with Multileaf Spring	F1HT-18045-AA		83309 or 89446	.....

Gabriel Part Numbers that appear in BLUE are GasSLX, adjustable shocks.\ Los números de parte Gabriel imprimidos en AZUL son amortiguadores ajustables GasSLX. \ Les numéros de pièce Gabriel imprimés en BLEU sont des amortisseurs ajustables GasSLX.

Gabriel® COMMERCIAL VEHICLE

Year Año Année	Model Modelo Modèle	O.E.M. #	Mount	Front Delantero Avant	Rear Trasero Arrière
FORD F Series - Conventional Cab .. cont'd					
1989-94	F-600, F-700, LPO (Low Profile Vehicle)	E9HS-18045-AA		83309 or 89446	.....
		E9HS-18080-AA		.....	85716
1976-79	F-700	D2TF-18045-AA		83312 or 89409	.....
1973-79	F-700 (Diesel), F-750 with 9000 lb Axle	D2EF-18045-AA		83312 or 89409	.....
		D7HT-18045-BA		83312 or 89409	.....
1971-72	F-700 (Diesel), F-750 with 9000 lb Axle	D2HF-18045-CA		83308	.....
1970	F-700 with 9000 lb Axle	D2HF-18045-CA		83308	.....
1990-97	F-700, F-800	AX-310		.....	83215
		E6HT-18080-AA		.....	83215
		E6HZ-18125-D		.....	83215
1994-97	F-700, F-800 with 15000, 17500, 19000 lb Taperleaf Springs	F4HT-18080-AA		.....	85314 or 89425
		F4HT-18080-AB		.....	85314 or 89425
		F5HZ-18125-A		.....	85314 or 89425
1994-97	F-700, F-800 with 21000 lb Taperleaf Springs	F4HT-18080-BA		.....	85001 or 89410
1995-97	F-700, F-800 with 52" or 54" Taperleaf Springs and with 10000 or 12000 lb Axle	F5HZ-18124-C		85063	.....
1994-97	F-700, F-800 with Multileaf Spring and 14600 lb Axle	F4HT-18045-EA		83125	.....
		F5HZ-18124-D		83125	.....
1994-97	F-700, F-800 with Multileaf Spring and with 10000, 12000 or 13200 lb Axle	F4HT-18045-CB		83107	.....
		F5HZ-18124-B		83107	.....
1994-97	F-700, F-800 with Taperleaf Springs and with 10000 or 12000 lb Axle	F4HT-18045-DA		85063	.....
1994-97	F-700, F-800 with Taperleaf Springs and with 6000, 7000, 8500, 9000 lb Axle	F4HT-18045-AB		83314	.....
		F4HT-18045-AC		83314	.....
		F5HZ-18124-A		83314	.....
1976-79	F-800	D2HT-18080-HA		.....	83225
		D2TF-18045-AA		83312 or 89409	.....
		D2TF-18045-GA		83308	.....
		D7HT-18045-GA		83308	.....
		D7HT-18080-BA		.....	83225
1978-79	F-800 with 9000 lb Axle	D2EF-18045-AA		83312 or 89409	.....
		D7HT-18045-BA		83312 or 89409	.....
1964-66	F-800, F-850-,F-900, F-950, F-1000 - Exc. Diesel with 11000 CP Axle	C1TT-18045-D		G60007	.....
1964-69	F-800, F-850-,F-900, F-950, F-1000 with 6000, 7000, 9000, 11000, 12000, 15000, 18000 lb Axles (Exc. Diesel with 6000 and 7000 lb Axles)	C1TT-18045-C		83312 or 89409	.....
		C6PF-18077-DL		83312 or 89409	.....
1964-69	F-950, F-1000, F-1100 Diesel with 7000 lb Axle	C6PF-18077-DN		83314	.....
F Series - F550, F650, F750 Models					
	F-550 w/single or dual rear wheels with 165" wheel base	AT-611		.....	G60084
1999-	F-550 with single or dual rear wheels with 165" or 201" wheel base	AT-611		.....	G60084
		F81A-18080-DCA		.....	G60084
		F81Z-18125-DC		.....	G60084

Gabriel Part Numbers that appear in BLUE are GasSLX, adjustable shocks.\ Los números de parte Gabriel imprimidos en AZUL son amortiguadores ajustables GasSLX. \ Les numéros de pièce Gabriel imprimés en BLEU sont des amortisseurs ajustables GasSLX.

Gabriel® COMMERCIAL VEHICLE

Year Año Année	Model Modelo Modèle	O.E.M. #	Mount	Front Delantero Avant	Rear Trasero Arrière
FORD F Series - F550, F650, F750 Models .. cont'd					
2000	F-650 with 8500 lb Front Axle	AA-494		83131	.....
		XC35-18045-JA		83131	.....
		XC3Z-18124-JA		83131	.....
2000	F-750 with 23000 lb Multi-leaf Rear Springs	AT-696		.....	83132
		F81A-18080-ZC		.....	83132
		F81Z-18125-ZA		.....	83132
2000	F-750 with 9000 lb Front Axle	XC35-18045-AB		83131	.....
FT Series - Conventional Cab					
1990-94	FT-900 (Low Profile Vehicle)	E9HS-18045-AA		83309 or 89446	.....
		E9HZ-18124-A		83309 or 89446	.....
1990-92	FT-900 (Low Profile Vehicle)	E9HS-18080-AA		.....	85716
1994-97	FT-900 with 46" Taperleaf Spring and 15000, 17500 or 19000 lb Axle	F4HT-18080-AA		.....	85314 or 89425
		F4HT-18080-AB		.....	85314 or 89425
		F5HZ-18125-DA		.....	85314 or 89425
1994-97	FT-900 with 46" Taperleaf Springs and 21000 lb Axle	F4HT-18080-BA		.....	85001 or 89410
1995-97	FT-900 with 52 or 54" Taperleaf Springs and with 10000 or 12000 lb Axle	F5HZ-18124-C		85063	.....
1990-94	FT-900 with 9000 lb Axle with H.D. Suspension or 10000, 11000, or 12000 lb Axles	E9HS-18045-AA		83309 or 89446	.....
		F1HT-18045-AA		83309 or 89446	.....
		F1HZ-18124-A		83309 or 89446	.....
1994-97	FT-900 with Multileaf Spring and 14600 lb Axle	F4HT-18045-EA		83125	.....
		F5HZ-18124-D		83125	.....
1994-97	FT-900 with Multileaf Spring and with 10000, 12000 or 13200 lb Axle	F4HT-18045-CB		83107	.....
		F5HZ-18124-B		83107	.....
1990-97	FT-900 with shock located forward of rear axle	AX-310		.....	83215
		E6HT-18080-AA		.....	83215
		E6HZ-18125-D		.....	83215
1994-97	FT-900 with Taperleaf Spring and with 10000 or 12000 lb Axle	F4HT-18045-DA		85063	.....
1994-97	FT-900, with Taperleaf Springs and with 6000, 7000, 8500 or 9000 lb Axles	F4HT-18045-AB		83314	.....
		F5HZ-18124-A		83314	.....
H and HT Series - Hi Tilt Cab					
1961-63	HT-950 with 11000 lb Axle	.....		83314	.....
1961-66	HT-950 with 12000 & 15000 lb Axle	.....		83314	.....
L, LT & LTS - Conventional Cab					
1976-81	L-800	D2EF-18045-AA		83312 or 89409	.....
		D7HT-18045-BA		83312 or 89409	.....
1973-90	L-800, L8000, L-900, L-9000, LT-800, LT-880, LT8000, LT-900, LT-9000 with 7000, 9000, 12000 lb Axles	D2KF-18045-AA		83312 or 89409	.....
		D7HF-18045-FA		83312 or 89409	.....

Gabriel Part Numbers that appear in BLUE are GasSLX, adjustable shocks.\ Los números de parte Gabriel imprimidos en AZUL son amortiguadores ajustables GasSLX. \
Les numéros de pièce Gabriel imprimés en BLEU sont des amortisseurs ajustables GasSLX.

Gabriel® COMMERCIAL VEHICLE

Year Año Année	Model Modelo Modèle	O.E.M. #	Mount	Front Delantero Avant	Rear Trasero Arrière
FORD L, LT & LTS - Conventional Cab .. cont'd					
1973-85	L-800, L8000, L-900,L-9000, LT-800, LT-880, LT8000, LT-900, LT-9000, LTS-8000, LTS-900, LTS-9000 with 7000, 9000, 12000, 16000 lb Axles	D2HF-18045-AA		83314	.....
		D2HT-18045-CA		83314	.....
1973-90	L-800, L850, L-900,L-9000, LT-800, LT-850, LT880, LT-900, LT-9000, LTS-800, LTS-850, LTS-900 with 7000, 9000, 12000, 16000 lb Axles	D2HF-18045-BA		83309 or 89446	.....
		D7HT-18045-DA		83309 or 89446	.....
1994-97	L-8000, L-9000, LT-8000 or LT-9000 Series with 21000 or 23000 lb. with 46" Taperleaf Spring	F4HT-18080-BA		.....	85001 or 89410
1990-97	L-8000, L-9000, LT-8000, LT-9000 with 52" Taperleaf Spring	F1HT-18045-GA		85006 or 89401	.....
1991-92	L-8000, L-9000, LT-8000, LT-9000 with 52" Taperleaf Spring	F1HT-18045-GB		89403	.....
1990-97	L-8000, L-9000, LT-8000, LT-9000 with 58" Parabolic Taperleaf Spring	F1HT-18045-RA		89402	.....
		F1HT-18045-RB		89402	.....
	L-8000, L-9000, LT-8000, LT-9000 with Hendrickson Rear Air Suspension	47902-13		.....	83122 or 89406
1991-97	L-8000, L-9000, LT-8000, LT-9000 with Multleaf Spring	F1HT-18045-DA		83312 or 89409	.....
1991-97	L-8000, L-9000, LT-8000, LT-9000 with 4000, 4500, 5400, 6000, 7200 lb Multi-leaf Springs and with 9000, 10000, 12000 or 16000 lb Axles	F1HT-18045-CB		83216	.....
1991-97	L-8000, L-9000, LT-8000, LT-9000 with 4500, 5400, 6000, 7200, 10000 lb Multileaf Springs and with 10000, 12000, 13200, 16000 lb Axles	F1HT-18045-DB		83308	.....
1973-89	LTS-800, LTS-850, LTS-900, LTS-9000 with 16000 lb Axle	D0HA-18045-E		83312 or 89409	.....
		D2HF-18045-DA		83312 or 89409	.....
		D7HT-18045-EA		83312 or 89409	.....
LA, LS & LST - Conventional Cab					
1996	LA-8000 Series with 12000 or 13000 lb Axles	F6HT-18045-LA		85376	.....
1996	LA-8000 Series with 16000 lb. Multileaf Spring	F6HT-18045-AA		85054 or 89438	.....
1991-96	LA-8000, LA-9000 Series with 4000, 4500, 5400, 6000, or 7200 lb. Multileaf Spring	F1HT-18045-CB		83216	.....
1991-96	LA-8000, LA-9000 Series with Hendrickson Rear Air Suspension	47902-28		.....	85013 or 89414
1990-97	LA-8000, LA-9000, LS-8000, LST-8000 with 4500 lb to 10000 lb Multileaf Spring	F1HT-18045-CA		83308	.....
1990-97	LA-8000, LS-8000, LST-8000 with 52" Taperleaf Spring	F1HT-18045-EA		89402	.....
1991-96	LA-8000, LS-8000, LST-8000 with 58" Taperleaf Spring	F1HT-18045-EB		89402	.....
LL, LLA, LTA, LTL, LTLA - Conventional Cab					
1991-95	LL-9000 with 4500, 5000, 6000 lb Springs and with 10000, 11000, 12000 lb Axles	F1HT-18045-DB		83308	.....
1991-96	LL-9000, LLA-9000, LTA-9000, LTLA-9000, with 4000, 4500, 5400, 6000 or 7200 lb Multileaf Springs and with 9000, 10000, 12000 or 16000 lb Axles	F1HT-18045-CB		83216	.....
1991-96	LLA-9000, LTLA-9000 with 4500, 5400, 6500 lb 58" Parabolic Taperleaf Spring	F1HT-18045-HB		85006 or 89401	.....
1991-95	LLA-9000, LTLA-9000 with 4500, 5400, 6500 lb 58" Parabolic Taperleaf Spring	F1HT-18045-CB		83216	.....
1990	LLA-9000, LTLA-9000 with 4500, 5400, 6500 lb 58" Parabolic Taperleaf Spring	F0HT-18045-CA		85006 or 89401	.....
1991-96	LTA-9000, LLA-9000 or LTLA-9000 Series with 4500, 5400, 6000, 7200 or 10000 lb. Multileaf Spring	F1HT-18045-CA		83308	.....

Gabriel Part Numbers that appear in BLUE are GasSLX, adjustable shocks.\ Los números de parte Gabriel imprimidos en AZUL son amortiguadores ajustables GasSLX. \ Les numéros de pièce Gabriel imprimés en BLEU sont des amortisseurs ajustables GasSLX.

Gabriel® COMMERCIAL VEHICLE

Year Año Année	Model Modelo Modèle	O.E.M. #	Mount	Front Delantero Avant	Rear Trasero Arrière

FORD LL, LLA, LTA, LTL, LTLA - Conventional Cab .. cont'd

1991-96	LTA-9000, LLA-9000 or LTLA-9000 Series with Hendrickson Rear Air Suspension	47902-28		.....	85013 or 89414
1980-85	LTL-900, LTL-9000 with 7000, 9000, 12000 lb Axle	D2HF-18045-AA		83314	.....

LN & LNT - Conventional Cab

1972	LN-500, LN-550 with 11000, 13000, 15000, 17000 lb Axles	D2TF-18080-HA		.....	83225
1970-72	LN-500, LN-550 with 5000, 5500, 6000 & 7000 lb Axles	D2TF-18045-GA		83308	.....
1972-79	LN-600, LN-650, LN-700, LN-750 with 11000, 13000, 15000, 17000 lb Axles	D2TF-18080-HA		.....	83225
1970-79	LN-600, LN-650, LN-700, LN-750 with 5000, 5500, 6000 & 7000 lb Axles	D7HT-18045-GA		83308	.....
1976-79	LN-600, LN-650, LN-700, LN-800	D2EF-18045-AA		83312 or 89409	.....
1980-89	LN-600, LN-700, LN-7000, LN-800, LN-8000, LNT-800, LNT-8000 with 3000, 3300 lb Springs and 5000, 5500, 6000, 7000 lb Axles	D7HT-18045-GA		83308	.....
		D7HT-18045-BA		83312 or 89409	.....
1980-89	LN-600, LN-700, LN-7000, LN-800, LN-8000, LNT-800, LNT-8000 with 4400 lb Spring and 7000, 9000 lb Axles	D2EF-18045-AA		83312 or 89409	.....
1980-89	LN-600, LN-700, LN-750 with 11000, 13000, 15000, 17000 lb Axles	D7HT-18080-BA		.....	83225
1970-75	LN-700, LN-750 Diesel with 9000 lb Axle	C1TT-18045-C		83312 or 89409	.....
		D2EF-18045-AA		83312 or 89409	.....
1994-97	LN-7000, LN-8000, LN-9000, LNT-8000 or LNT-9000 Series with 21000 or 23000 lb. with 46" Taperleaf Spring	F4HT-18080-BA		.....	85001 or 89410
1991-97	LN-7000, LN-8000, LN-9000, LNT-8000 or LNT-9000 Series with 4000, 4500, 5400, 6000 or 7200 lb. Multileaf Springs and with 9000, 10000, 12000 or 16000 lb. Axles	F1HT-18045-CB		83216	.....
1991-97	LN-7000, LN-8000, LN-9000, LNT-8000, LNT-9000 with 52" Taperleaf Spring	F1HT-18045-GB		89403	.....
1990	LN-7000, LN-8000, LN-9000, LNT-8000, LNT-9000 with 52" Taperleaf Spring	F1HT-18045-GA		85006 or 89401	.....
1990-97	LN-7000, LN-8000, LN-9000, LNT-8000, LNT-9000 with 58" Parabolic Taperleaf Spring	F1HT-18045-RA		89402	.....
		F1HT-18045-RB		89402	.....
1990	LN-7000, LN-8000, LN-9000, LNT-8000, LNT-9000 with 58" Parabolic Taperleaf Spring	F1HT-18045-RA		89402	.....
	LN-7000, LN-8000, LN-9000, LNT-8000, LNT-9000 with Hendrickson Rear Air Suspension	47902-13		.....	83122 or 89406
		F0HT-18080-AA		.....	85005 or 89430
		F0HZ-18125-A		.....	85005 or 89430
1990-97	LN-7000, LN-8000, LN-9000, LNT-8000, LNT-9000 with Multileaf Spring	F1HT-18045-DA		83312 or 89409	.....
1991-97	LN-7000, LN-8000, LN-9000, LNT-8000, LNT-9000 with 4500, 5400, 6000, 7200, 10000 lb Springs and with 10000, 12000, 13200, 16000 lb Axles	F1HT-18045-DB		83308	.....
1976-81	LN-800, LN-8000, LN-900, LN-9000, LNT-800, LNT-8000, LNT-900, LNT-9000	D2HF-18045-AA		83314	.....
1976-77	LN-800, LN-8000, LN-900, LN-9000, LNT-800, LNT-8000, LNT-900, LNT-9000	D2KF-18045-AA		83312 or 89409	.....
		D7HT-18045-CA		83314	.....
1970-71	LN-800, LN-850, LNT-900, with 7000, 9000, 12000 lb Axles	D2TF-18045-GA		83308	.....

Gabriel Part Numbers that appear in BLUE are GasSLX, adjustable shocks.\ Los números de parte Gabriel imprimidos en AZUL son amortiguadores ajustables GasSLX. \
Les numéros de pièce Gabriel imprimés en BLEU sont des amortisseurs ajustables GasSLX.

Gabriel® COMMERCIAL VEHICLE

Year Año Année	Model Modelo Modèle	O.E.M. #	Mount	Front Delantero Avant	Rear Trasero Arrière
FORD LN & LNT - Conventional Cab .. cont'd					
1970-89	LN-800, LN-850, LN-8000, LN-900, LN-9000, LNT-800, LNT-850, LNT-880, LNT-8000, LNT-900, LNT-9000 with 6000, 7000, 9000, 12000, 16000 lb Axles	D2HF-18045-BA		83309 or 89446	.....
		D7HT-18045-DA		83309 or 89446	.....
Louisville Series - Conventional Cab					
1996-97	All Models with 10000 lb or 12000 lb Axle and 54" Taperleaf Spring	F6HT-18045-AC		85054 or 89438	.....
		F6HZ-18124-A		85054 or 89438	.....
1996-	All with 13200 lb or 14600 lb Axle with 54" Taperleaf Spring	F6HT-18045-GB		85030 or 89440	.....
		F6HT-18045-GC		85030 or 89440	.....
		F6HZ-18124-G		85054 or 89438	.....
1996-	All with 54" Multi-leaf Spring and 14600 or 16000 lb Axle	F6HT-18045-CC		85055 or 89439	.....
		F6HZ-18124-C		85055 or 89439	.....
	All with 54" Multileaf Spring and with 12000 or 13200 lb Axle	F6HT-18045-BC		85047 or 89435	.....
1996-97	All with 54" Multileaf Spring and with 8500 or 9000 lb Axle	F6HT-18045-JB		83200	.....
		F6HT-18045-JC		83200	.....
		F6HZ-18124-J		83200	.....
1996-97	All with 60" Taperleaf Spring and 12000, 13000 or 14600 lb Axle	F6HT-18045-EB		85055 or 89439	.....
		F6HT-18045-EC		85055 or 89439	.....
		F6HZ-18124-D		85055 or 89439	.....
		F6HZ-18124-E		85055 or 89439	.....
		F6HZ-18124-F		85055 or 89439	.....
1996-97	All with 8500 lb or 9000 lb Axle with 54" Taperleaf Spring	F6HT-18045-HB		85054 or 89438	.....
		F6HT-18045-HC		85054 or 89438	.....
		F6HZ-18124-H		85054 or 89438	.....
	All with Hendrickson HAS-400 Air Suspension	47902-28		.....	85013 or 89414
		F6HZ-18080-FC		.....	85013 or 89414
		F6HZ-18125-D		.....	85013 or 89414
	All with Neway AD-123 Air Suspension	90045068		.....	89441
		F6HZ-18125-C		.....	89441
	With Neway AD-246 Air Suspension	90045099		.....	85906
		90045132		.....	85909
Motorhome Chassis					
1973-76	M-400& M-500 Motorhome Chassis	.....		.....	83225
		.....		85012 or 89413	.....
1957-76	P-400 & 4000 Motorhome Chassis - Exc. H.D. Springs	.....		.....	.....
1957-76	P-400 & 4000 Motorhome Chassis with H.D. Springs	.....		85012 or 89413	.....

Gabriel Part Numbers that appear in BLUE are GasSLX, adjustable shocks.\ Los números de parte Gabriel imprimidos en AZUL son amortiguadores ajustables GasSLX. \ Les numéros de pièce Gabriel imprimés en BLEU sont des amortisseurs ajustables GasSLX.

Gabriel® COMMERCIAL VEHICLE

Year Año Année	Model Modelo Modèle	O.E.M. #	Mount	Front Delantero Avant	Rear Trasero Arrière

FORD .. cont'd

N and NT 89" BBC Conventional Cab

1964-69	N-1100 with 11000 thru 15000 lb Axles	C6PF-18077-DN		83314	.....
1964-69	N-500, N-550, N-600, N-650, N-700 with 5000, 6000, 7000 & 9000 lb Axles	D2TF-18045-GA		83308	.....
1964-69	N-500, N-550, N-600, N-650, N-700, N-750	C7PF-18077-A		.....	83225
		D2TF-18080-HA		.....	83225
1964-67	N-600, N-650, N-700, N-750 with 6000 & 7000 lb Axle	C6PF-18077-DL		83312 or 89409	.....
1967-69	N-750 with 9000 lb Axle	C1TT-18045-C		83312 or 89409	.....
1964-69	N-800, N-850, N-900 Gas with 6000 & 7000 lb Axle	C6PF-18077-DL		83312 or 89409	.....
1964-69	N-800, N-850, N-900, N-950 - Exc. Diesel with 6000 & 7000 lb Axle	C1TT-18045-C		83312 or 89409	.....
1967-69	N-850, N-900, N-950 with 6000, 7000, 9000, 11000, 12000 lb Axles	C1TT-18045-C		83312 or 89409	.....
1967-69	N-850, N-900, N-950, N-1000, NT-850, NT-900,NT-950, NT-1000 with 6000, 7000, 9000, 11000, 12000, 15000, 18000 lb Axles	C1TT-18045-D		G60007	.....

P-Series - Parcel Delivery

1957-76	P-350 & 3500	.....		.....	.....
1957-76	P-400 & 4000 - Exc. H. D. Springs	.....		.....	.....
1957-76	P-400 & 4000 w/ H. D. Springs	.....		85012 or 89413	.....
1957-76	P500, P-5000	.....		85012 or 89413	.....
		.....		.....	83225
1978-79	P-600	D7HT-18045-HA		85012 or 89413	.....
		D7HT-18080-CA		.....	83225

T-Series - Conventional Tandem

1964-69	T-750, T-800, T-850, T-900, T-950 with 6000, 7000, 9000, 11000, 12000, 15000, 18000 lb Axles	C1TT-18045-D		G60007	.....
1964-69	T-750, T-800, T-850, T-900, T-950 with 9000 thru 15000 lb Axles	C1TT-18045-E		83314	.....
		C6PF-18077-DN		83314	.....

W and WT Series - Hi Tilt Cab Highway Tractor

1966-71	W-900, W-950,W-1000, WT-900, WT-950, WT-1000 with 11000 lb Axle	D2HA-18045-E1A		85304	.....
		D2HA-18045-E1B		85304	.....
		D2HA-18045-E2A		85304	.....
		D2HA-18045-E2B		85304	.....
1966-71	W-900, W-950,W-1000, WT-900, WT-950, WT-1000 with 12000 & 15000 lb Axle	C6TA-18045-Z		85301	.....
1973-77	W-900, WT-900 with 11000, 12000 & 15000 lb Axle	C6TA-18045-Y		85301	.....
		C6TA-18045-Z		85301	.....
1973-77	W-900, WT-900 with Air Suspension	D2HZ-18080-A		.....	83209 or 89414
		D4HA-18080-AA		.....	83209 or 89414

Gabriel Part Numbers that appear in BLUE are GasSLX, adjustable shocks.\ Los números de parte Gabriel imprimidos en AZUL son amortiguadores ajustables GasSLX. \ Les numéros de pièce Gabriel imprimés en BLEU sont des amortisseurs ajustables GasSLX.

FORD W and WT Series - Hi Tilt Cab Highway Tractor .. cont'd

Year Año Année	Model Modelo Modèle	O.E.M. #	Mount	Front Delantero Avant	Rear Trasero Arrière
	HN-80 with 21000 lb or 23000 lb Axle & 52" Taper leaf Rear Suspension	F6HT-18080-JA		.....	85305
	Models with O.E.M. Number	57365-111		85006 or 89401	.....
		70127		85006 or 89401	.....
		70128		85006 or 89401	.....
		90044769		.....	83207 or 89407
		90044770		.....	83207 or 89407
		AX267A		83309 or 89446	.....
		E5HT-18045-DA		85301	.....
		E5HT-18045-EA		85301	.....
		E6HZ-18124-D		85301	.....
		E7XZ-18124-A		G60023	.....
		E7XZ-18124-F		G60046	.....
		E7XZ-18124-G		G60046	.....
		E7XZ-18125-B		.....	G60024
		E9HZ-18125-A		.....	85716
		F0HS-18045-AA		85006 or 89401	.....
		F0HZ-18124-B		85006 or 89401	.....
		F1HT-18045-LB		85006 or 89401	.....
		F1HT-18045-RB		89402	.....
		F1HZ-18124-B		83308 or 89435	.....
		F1HZ-18124-C		89402	.....
		F1HZ-18124-D		85006 or 89401	.....
		F1HZ-18124-E		85006 or 89401	.....
		F1HZ-18124-F		85006 or 89401	.....
		F1HZ-18124-G		85006 or 89401	.....
		F1HZ-18124-H		85040	.....
		F1HZ-18124-J		83308	.....
		F1HZ-18124-K		89402	.....
		F2HZ-18124-B		85301	.....
		F4TA-18045-TA		G60080	.....
		F4TA-18080-PA		.....	G60084
		F4TZ-18124-K		G60080	.....
		F4TZ-18125-E		.....	G60084
		F5HZ-18124-C		85063	.....
		F5HZ-18125-A		.....	85314 or 89425
		F5HZ-18125-B		.....	85001 or 89410
		F6HT-18045-KA		83200	.....
		F6HT-18045-MA		85006 or 89401	.....
		F6HT-18080-CA		.....	85314 or 89425
		F6HT-18080-DA		.....	83109
		F6HT-18080-EA		.....	85906

Gabriel Part Numbers that appear in BLUE are GasSLX, adjustable shocks.\ Los números de parte Gabriel imprimidos en AZUL son amortiguadores ajustables GasSLX. \ Les numéros de pièce Gabriel imprimés en BLEU sont des amortisseurs ajustables GasSLX.

Gabriel COMMERCIAL VEHICLE

Year Año Année	Model Modelo Modèle	O.E.M. #	Mount	Front Delantero Avant	Rear Trasero Arrière

FORD W and WT Series - Hi Tilt Cab Highway Tractor .. cont'd

	Models with O.E.M. Number	F6HT-18080-FC		.....	85013 or 89414
		F6HZ-18124-B		83308 or 89435	.....
		F6HZ-18124-J		83200	.....
		F6HZ-18124-KA		83200	.....
		F6HZ-18124-MA		85006 or 89401	.....
		F6HZ-18125-A		.....	85314 or 89425
		F6HZ-18125-D		.....	85013 or 89414
	Additional O.E.M. Interchanges	47902-8		83122 or 89406	
		680029		85301	
		B3Q-18124-A		83219	
		B3Q-18125-A		83217	
		B3T-18125-A		83217	
		B3TZ-18125-A		83217	
		B6TZ-18124-A		83219	
		B7C-18125-A		83217	
		B7J-18124-A		83219	
		B7J-18125-A		83217	
		B7J-18125-C		83217	
		B7T-18124-A		83219	
		B7T-18124-B		83216	
		B7T-18124-C		83217	
		B7TZ-18124-B		83216	
		B7TZ-18124-C		83216	
		B7TZ-18124-D		83219	
		B7TZ-18124-E		83217	
		B7TZ-18125-C		83217	
		B8Q-18125-A		85307	
		B8QZ-18124-A		83312 or 89409	
		B8T-18124-A		83219	
		B9TT-18045-C		83219	
		B9TT-18045-D		83219	
		C0TT-18045-A		83219	
		C0TT-18045-D		83216	
		C0TZ-18124-A		83216	
		C1TZ-18045-C		83312 or 89409	
		C1TZ-18124-A		83217	
		C1TZ-18124-B		83216	
		C1TZ-18124-C		83312 or 89409	
		C1TZ-18124-D		83309 or 89446	
		C1TZ-18124-N		83314	
		C1TZ-18125-B		83217	
		C1VT-18080-B		83217	
		C2TA-18045-B		83308	
		C2TZ-18124-A		83308	
		C3TA-18045-A		83216	
		C3TZ-18124-A		83308	
		C4HZ-18124-A		83312 or 89409	
		C4HZ-18124-B		83309 or 89446	
		C4HZ-18124-C		83314	
		C4HZ-18124-D		83312 or 89409	

Gabriel Part Numbers that appear in BLUE are GasSLX, adjustable shocks.\ Los números de parte Gabriel imprimidos en AZUL son amortiguadores ajustables GasSLX. \
Les numéros de pièce Gabriel imprimés en BLEU sont des amortisseurs ajustables GasSLX.

Gabriel® COMMERCIAL VEHICLE

Year Año Année	Model Modelo Modèle	O.E.M. #	Mount	Front Delantero Avant	Rear Trasero Arrière
FORD .. cont'd					
	Additional O.E.M. Interchanges	C4HZ-18124-E		83309 or 89446	
		C4HZ-18124-F		83308	
		C4PF-18045-H		83216	
		C4TZ-18124-AA		83308	
		C4TZ-18124-AB		83308	
		C4TZ-18124-B		83308	
		C5TZ-18124-A		83308	
		C6PF-18077-DD		83216	
		C6PF-18077-DE		83219	
		C6TA-18045-U		85301	
		C6TA-18045-V		85301	
		C6TS-18080-A		83217	
		C6TZ-18124-D		85301	
		C6TZ-18124-E		85301	
		C6TZ-18124-H		85301	
		C6TZ-18124-J		85301	
		C7HZ-18124-A		83312 or 89409	
		C7PF-18077-Z		83217	
		C7TA-18045-R		83216	
		C7TA-18045-Z		85301	
		C8PF-18045-CM		83216	
		CITT-18045-G		83216	
		D0HA-18045-D		83309 or 89446	
		D0HZ-18124-A		83309 or 89446	
		D0HZ-18124-B		83312 or 89409	
		D0HZ-18124-C		83314	
		D1TZ-18124-D		83308	
		D1TZ-18124-E		83216	
		D1TZ-18125-E		83217	
		D2EF-18124-AA		83312 or 89409	
		D2HA-18045-EB		85301	
		D2HA-18045-F1A		85301	
		D2HA-18045-F1B		85301	
		D2HA-18045-F2A		85301	
		D2HA-18045-F2B		85301	
		D2HF-18045-A		83314	
		D2HF-18124-AA		83314	
		D2HT-18045-EA		83312 or 89409	
		D2HZ-18080-A		83209 or 89414	
		D2HZ-18125-A		83209 or 89414	
		D2HZ-18125-B		83209 or 89414	
		D2KF-18124-AA		83312 or 89409	
		D2TA-18045-AAA		83219	
		D2TA-18045-ZA		83219	
		D2TF-18124-F		83309 or 89446	
		D2TZ-18124-A		83308	
		D2TZ-18124-E		83312 or 89409	
		D2TZ-18124-F		83309 or 89446	
		D2TZ-18124-G		83314	
		D2TZ-18124-H		83308	
		D2TZ-18124-J		83312 or 89409	
		D3TA-18045-BA		83219	

Gabriel Part Numbers that appear in BLUE are GasSLX, adjustable shocks.\ Los números de parte Gabriel imprimidos en AZUL son amortiguadores ajustables GasSLX. \ Les numéros de pièce Gabriel imprimés en BLEU sont des amortisseurs ajustables GasSLX.

Gabriel COMMERCIAL VEHICLE

Year Año Année	Model Modelo Modèle	O.E.M. #	Mount	Front Delantero Avant	Rear Trasero Arrière
	Additional O.E.M. Interchanges	D3TZ-18124-B		83219	
		D3TZ-18125-C		83217	
		D3TZ-18125-D		83217	
		D4HA-18080-A		83209 or 89414	
		D4HA-18080-AA		83209 or 89414	
		D4TZ-18124-J		83308	
		D5TZ-18124-B		83308	
		D5TZ-18124-C		83312 or 89409	
		D7HF-18125-AA		83215	
		D7HT-18124-BA		83312 or 89409	
		D7HT-18124-CA		83314	
		D7HT-18124-DA		83309 or 89446	
		D7HT-18124-EA		83312 or 89409	
		D7HT-18124-FA		83312 or 89409	
		D7HT-18124-GA		83308	
		D7HT-18124-HA		83219	
		D7HT-18124-JA		83308	
		D7HT-18124-KA		85301	
		D7HT-18125-BA		83217	
		D7HT-18125-CA		83217	
		D7HT-18125-DA		83215	
		D7HT-18125-FA		83123 or 89405	
		D7HZ-18125-A		83215	
		D7TA-18124-GA		83314	
		D8HZ-18124-A		85301	
		D8HZ-18125-A		83209 or 89414	
		D8HZ-18125-B		83123 or 89405	
		E0HZ-18124-A		83309 or 89446	
		E1TA-18045-AA		83309 or 89446	
		E1TD-18045-AA		83309 or 89446	
		E5HT-18045-AA		85301	
		E5HT-18080-DA		85315	
		E5HT-18080-EA		85315	
		TACAA-18045-A		83216	
		TANNA-18045-A		83312 or 89409	
		TBDA-18080-A		83217	
		TBDA-18080-B		83217	
		TDAA-18080-B		83217	
		TDBA-18045-A		83219	
		TDBA-18045-B		83219	
		TDBA-18080-A		83217	
		TDBA-18080-B		83217	
		TDBA-18080-C		83217	
		TDBE-18045-A		83219	
		TFAA-18045-B		83219	
		TFAA-18045-C		83219	
		TFAA-18080-A		85307	
		THAB-18045-A		83219	
		THAB-18045-B		83219	
		TQSH-18045-A		83309 or 89446	

FORD .. cont'd

Gabriel Part Numbers that appear in BLUE are GasSLX, adjustable shocks.\ Los números de parte Gabriel imprimidos en AZUL son amortiguadores ajustables GasSLX. \
Les numéros de pièce Gabriel imprimés en BLEU sont des amortisseurs ajustables GasSLX.

Gabriel® COMMERCIAL VEHICLE

Year Año Année	Model Modelo Modèle	O.E.M. #	Mount	Front Delantero Avant	Rear Trasero Arrière
FREIGHTLINER					
	Argosy				
	Models	10-12703-000		85918 or 89449	.....
		10-12704-000		85918 or 89449	.....
		16-14259-000		.....	85331
1999 -	Models	16-15817-000		.....	85724 or 89443
- 1998		16-13957-000		.....	85724 or 89443
		680339		.....	85724 or 89443
	Business Class - FL50, 60, 70, 80				
	Business Class 6 & 7 with 15000 lb Rear Suspension	6803260000		.....	83120
	FAS Airliner, Single / Tandem Past Production	16-11133-000		.....	85007 or 89412
- 1998	FL Series with FAS II Rear Air Suspension	16-13957-000		.....	85724 or 89443
		16-15817-000		.....	85724 or 89443
- 1998	FL 70 Series with FAS II Rear Air Suspension	680339		.....	85724 or 89443
	FLN with 11000 to 12000 lb Front axle	665538		85006	.....
		6803230300		85006	.....
	FLN with 6000 to 9000 lb Front axle	654654		85043	.....
		6803230200		85043	.....
	Business Class- M2				
2002 & UP	Models with 10000 to12000 lb. Front Axle	10-12390-000		85920	.....
2002 & UP	Models with 6000 to 9000 lb. Front Axle	10-12388-000		85920	.....
2002 & UP	Models with Rear 10-15K Low Profile AirLiner	16-16577-000		.....	85335
2002 & UP	Models with Rear 52" Spring ,10/15K	16-16486-000		.....	83134
2002 & UP	Models with Rear 52" Spring ,18/23K	16-16442-000		.....	83134
2002 & UP	Models with Rear 60" Spring ,18/23K	16-15765-000		.....	85921
	Cargo - FC70 & FC80				
	FC70 & FC80 Series with 11000 to 12000 lb Front Axle	665538		85006	.....
		6803230300		85006	.....
	FC70 & FC80 Series with 6000 to 9000 lb Front Axle	654654		85043	.....
		6803230200		85043	.....
- 1998	FC70 & FC80 Series with FAS II Rear Air Suspension	16-13957-000		.....	85724 or 89443
		680339		.....	85724 or 89443
		16-15817-000		.....	85724 or 89443
	Century Class - C112 & C120				
	Century with Low Profile Rear Suspension	16-14259-000		.....	85331
	Models with 1 1/2 leaf Taper Spring	10-13063-000		85918 or 89449	.....
2001	Models with 12000 lb Taperleaf Front Suspension	10-13211-000		85918 or 89449	.....

Gabriel Part Numbers that appear in BLUE are GasSLX, adjustable shocks.\ Los números de parte Gabriel imprimidos en AZUL son amortiguadores ajustables GasSLX. \ Les numéros de pièce Gabriel imprimés en BLEU sont des amortisseurs ajustables GasSLX.

Gabriel® COMMERCIAL VEHICLE

Year Año Année	Model Modelo Modèle	O.E.M. #	Mount	Front Delantero Avant	Rear Trasero Arrière
FREIGHTLINER Century Class - C112 & C120 .. cont'd					
2000	Models with 12000 lb Taperleaf Front Suspension	10-13021-000		85918 or 89449	.....
1997-1999	Models with 12000 lb Taperleaf Front Suspension	10-12542-000		85901	.....
-1997	Models with 12000 lb Taperleaf Front Suspension	10-12470-000		.....	.....
- 1998	Models with FAS II Rear Air Suspension	16-13957-000		.....	85724 or 89443
		680339		.....	85724 or 89443
		16-15817-000		.....	85724 or 89443
2002 & up	Models with Hendrickson Airtek	58913-003		85932 or 89453	.....
	Models with Low Profile Front	10-12703-000		85918 or 89449	.....
		10-12704-000		85918 or 89449	.....
Classic					
	Models with Freightliner FAS II Rear Air Suspension	16-15817-000		.....	85724 or 89443
	Models with O.E.M. Number	10-12032-002		85320 or 89429	.....
Classic/ClassicXL					
	120 &132-inch. BBC	10-12032-004		85320 or 89429	.....
		680009		85302 or 89420	.....
		70029		85308 or 89422	.....
	With FASII Rear Air Suspension	16-13957-000		.....	85724 or 89443
		680339		.....	85724 or 89443
Columbia					
1999	Models with FAS II Rear Air Suspension	16-13957-000		.....	85724 or 89443
		680339		.....	85724 or 89443
2000-	Models with FAS II Rear Air Suspension	16-15817-000		.....	85724 or 89443
2002 & up	Models with Hendrickson Airtek	58913-003		85932 or 89453	.....
	Models with O.E.M. Number	10-13063-000		85918 or 89449	.....

Gabriel Part Numbers that appear in BLUE are GasSLX, adjustable shocks.\ Los números de parte Gabriel imprimidos en AZUL son amortiguadores ajustables GasSLX. \
Les numéros de pièce Gabriel imprimés en BLEU sont des amortisseurs ajustables GasSLX.

Gabriel® COMMERCIAL VEHICLE

FREIGHTLINER .. cont'd

FLA & FLB Series - COE Truck & Tractor

Year Año Année	Model Modelo Modèle	O.E.M. #	Mount	Front Delantero Avant	Rear Trasero Arrière
	COE Series	10-12030-002		85320 or 89429	.....
		10-12032-000		85320 or 89429	.....
		10-12032-001		85320 or 89429	.....
		10-12032-002		85320 or 89429	.....
		10-12032-003		85320 or 89429	.....
		10-12032-004		85320 or 89429	.....
	COE Series with Airliner Rolling Lobe Spring Air Suspension	16-13947-000		.....	85319 or 89428
		6813260400		.....	85319 or 89428
	COE Series with Convoluted Spring Air Suspension	16-12117-000		.....	85007 or 89412
		665236		.....	85007 or 89412
- 1998	COE Series with FASII Rear Air Suspension	16-13957-000		.....	85724 or 89443
		680339		.....	85724 or 89443
1999 -	COE Series with FASII Rear Air Suspension	16-15817-000		.....	85724 or 89443
	COE Series with Neway Tag Axle Air Suspension	90044162		.....	83128

FLC Series - 112 Conventional Truck & Tractor

	112 Conventional Series	10-12030-002		85320 or 89429	.....
		10-12032-000		85320 or 89429	.....
		10-12032-001		85320 or 89429	.....
		10-12032-002		85320 or 89429	.....
		10-12032-003		85320 or 89429	.....
	112 Conventional Series with Airliner Rolling Lobe Spring Air Suspension	16-13947-000		.....	85319 or 89428
		6813260400		.....	85319 or 89428
	112 Conventional Series with Convoluted Spring Air Suspension	16-12117-000		.....	85007 or 89412
		665236		.....	85007 or 89412
1999 -	112 Conventional Series with FASII Rear Air Suspension	16-15817-000		.....	85724 or 89443
	112 Conventional Series with Neway Tag Axle Air Suspension	90044162		.....	83128

Gabriel Part Numbers that appear in BLUE are GasSLX, adjustable shocks.\ Los números de parte Gabriel imprimidos en AZUL son amortiguadores ajustables GasSLX. \ Les numéros de pièce Gabriel imprimés en BLEU sont des amortisseurs ajustables GasSLX.

Gabriel COMMERCIAL VEHICLE

Year Año Année	Model Modelo Modèle	O.E.M. #	Mount	Front Delantero Avant	Rear Trasero Arrière

FREIGHTLINER .. cont'd

FLD Series - 112 & 120 Conventional Truck & Tractor

	Conventional Series	10-12030-002		85320 or 89429	.....
		10-12032-000		85320 or 89429	.....
		10-12032-001		85320 or 89429	.....
		10-12032-002		85320 or 89429	.....
		10-12032-003		85320 or 89429	.....
		10-12032-004		85320 or 89429	.....
	Conventional Series with Airliner Rolling Lobe Spring Air Suspension	16-13947-000		.....	85319 or 89428
		6813260400		.....	85319 or 89428
	Conventional Series with Convoluted Spring Air Suspension	16-12117-000		.....	85007 or 89412
		665236		.....	85007 or 89412
- 1998	Conventional Series with FASII Rear Air Suspension	16-13957-000		.....	85724 or 89443
		680339		.....	85724 or 89443
1999 -	Conventional Series with FASII Rear Air Suspension	16-15817-000		.....	85724 or 89443

Legacy

1999 -	Models with FAS II Rear Air Suspension	16-15817-000		.....	85724 or 89443
		16-13957-000		.....	85724 or 89443
		16-13957-003		.....	85724 or 89443
		680339		.....	85724 or 89443
	Models with O.E.M. Number	6813230900		85009	.....

M2

	Models with O.E.M. Number	10-13634-000		85918 or 89449	.....

Freightliner Additional O.E.M. Numbers

	Models with O.E.M. Number	16-10688-000		.....	85042
		16-11133-000		.....	85007 or 89412
		16-14577-000		85043	.....
		16-14669-000		G60111	.....
		16-14759-000		85000 or 89436	.....
		535228		85302 or 89420	.....
		650224		.....	83225
		660235		.....	85042
		680009		85302 or 89420	.....
		6813230900		85009	.....
		6813231300		.....	.....

Gabriel Part Numbers that appear in BLUE are GasSLX, adjustable shocks.\ Los números de parte Gabriel imprimidos en AZUL son amortiguadores ajustables GasSLX. \ Les numéros de pièce Gabriel imprimés en BLEU sont des amortisseurs ajustables GasSLX.

Gabriel® COMMERCIAL VEHICLE

Year Año Année	Model Modelo Modèle	O.E.M. #	Mount	Front Delantero Avant	Rear Trasero Arrière

FREIGHTLINER Additional O.E.M. Numbers .. cont'd

	Models with O.E.M. Number	6813260000		.....	83634
		6813260200		.....	85011
		70029		85308 or 89422	.....
		70042		85302 or 89420	.....
	Additional O.E.M. Interchanges	680008		85300 or 89419	
		680017		85302 or 89420	

FREIGHTLINER CUSTOM CHASSIS

	F65 School bus chassis	6803230300		85006	.....
		6803260000		.....	83120
		GBL654725		.....	83120
		GBL665538		85006	.....
	FedEx Trucks with O.E.M. Number	MAE16950		83118	.....
		P117146		83118	.....
	Fleetwood Motor Home with O.E.M. Number	651375		83119	.....
		RW24285		83119	.....
	HT35 Step Van	16-14782-000		.....	.....
	HT45 Step Van	16-15394-000		.....	.....
	HT45 Step Van w/35" Front Spring	16-15473-000		.....	.....
	HT45 Step Van w/38" Front Spring	16-15089-000		.....	.....
	MB55 & MT55 Models	16-17684-000		85058	.....
	MB55 Shuttle bus w/8000 lb. flat leaf front suspension	16-15676-000		85058	.....
	MP14 and 19 (UPS)	P117253		83116	.....
	MT135	16-16331-000		.....	.....
		16-17019-000		.....	.....
		GBL654875		.....	83117
	MT55 Step Van	16-15436-000		.....	.....
		16-15705-000		.....	.....
	MT55 Step Van w/35" Front Spring	16-15473-000		.....	.....
	MT55 Step Van w/38" Front Spring	16-15089-000		.....	.....
	MT55 Utility Van w/8000 lb. flat leaf front suspension	16-15676-000		85058	.....
	Oshkosh Motor Home with O.E.M. Number	1398980		83127	83127
		GBL654875		.....	83117
	Shuttle Bus Chassis	16-16082-000		85043	.....
	W700	P110799		.....	.....
	Models with O.E.M. Number	GBL654918		83118	.....
		P117146		83118	.....
	Additional O.E.M. Interchanges	10-13358-000		85904	
		1745500		89430	
		66554540l		89430	
		P116168		83117	
		P117099		.....	

Gabriel Part Numbers that appear in BLUE are GasSLX, adjustable shocks.\ Los números de parte Gabriel imprimidos en AZUL son amortiguadores ajustables GasSLX. \ Les numéros de pièce Gabriel imprimés en BLEU sont des amortisseurs ajustables GasSLX.

Gabriel® COMMERCIAL VEHICLE

Year Año Année	Model Modelo Modèle	O.E.M. #	Mount	Front Delantero Avant	Rear Trasero Arrière
FRUEHAUF					
	"L" Suspensions	UCD-006216-001		.....	83203 or 89436
	"T" Suspensions	UCE-1295-901		.....	85300 or 89419
	"T" Suspensions With Drop Frame (NT Construction)	UCF-8339-001		.....	85321
		UCF-8339-002		.....	85321
	All with Air Suspension and O.E.M. Number	UCE-1295-1		.....	85300 or 89419
	All with Lift Axle	UCE-9399-1		.....	83122 or 89406
	Model "T" Low Mount with 48 ft drop-deck trailer	.....		.....	85327
	Model UCA-5431	5352858		.....	85305
	Model W24T1 Air Ride	UCE-2983-000		.....	85322
		UCE-2983-001		.....	85322
	Tractor & Trailer Lift Axle with O.E.M. Number	5116-117		.....	83122 or 89406
	Models with O.E.M. Number	144-5910		.....	85300 or 89419
		UCA-01113		.....	85304
		UCA-5431		.....	85305
		UCD-6216-1		.....	83203 or 89436
		UEY 1124-001		.....	85030 or 89440
	Additional O.E.M. Interchanges	680117		85300 or 89419	
		680298		85321	
		UCE-2983-1		85322	
FWD TRUCK					
	Model with O.E.M. Number	450739		85302 or 89420	.....
GILLIG BROS.					
	School Bus w/1" Mounting Pins	200-171		85304	85304
		53-176		85304	85304
	School Bus w/3/4" Mounting Pins	57113		83219	.....
		57131		.....	83216
	Transit Bus, Phantom 55, 40, TB40	53-14010		.....	85318
		53-24685		85723	.....
		695110		.....	85318
		90F-1912		.....	85318
	Models with O.E.M. Number	695109		85723	.....
		82-01878		83122 or 89406	83122 or 89406
		H53-02132/14005		85723	.....
		MR-6394		85723	.....
	Additional O.E.M. Interchanges	53-02132		85723	
		53-02133-000		85318	
		680009		85302 or 89420	
		70034		85302 or 89420	
		82-21542-000		85716	

Gabriel Part Numbers that appear in BLUE are GasSLX, adjustable shocks.\ Los números de parte Gabriel imprimidos en AZUL son amortiguadores ajustables GasSLX. \
Les numéros de pièce Gabriel imprimés en BLEU sont des amortisseurs ajustables GasSLX.

Gabriel®
COMMERCIAL VEHICLE

Year Año Année	Model Modelo Modèle	O.E.M. #	Mount	Front Delantero Avant	Rear Trasero Arrière
GMC TRUCK					
	3500 & 4000 Series				
1960-62	3500, 4000, B-4000, L-4000, S-4000 with H-130, H-150 and 13800 Axles	.....		.....	83221
1963-66	Truck and School Bus	.....		.....	83221
		.....		85005 or 89430	.....
	4500 Series				
1966-72	CE-4500, CS-4500 Conventional Cab with V-8 Gas or In-line 6 Gas Engines	22012096		83221	83221
		3192892		83221	83221
1966-72	EG-4500, EM-4500, ES-4500 Cab/Cowl with V-6 Gas or Diesel or In-line 6 Gas Engines	22012095		.....	85005 or 89430
		3171068		83216	.....
		3171462		.....	85005 or 89430
		3192657		83216	.....
		3192890		.....	85005 or 89430
		4940614		83216	.....
		4963853		83216	.....
		4963854		83216	.....
1978-80	PS4620 P, 4650P Step Van (Walk-in)	22002293		85005 or 89430	.....
		22007751		83303	.....
1972-80	PS4620 P, 4650P Step Van (Walk-in)	22012096		.....	83221
		3192892		.....	83221
1977	PS4620 P, 4650P Step Van (Walk-in)	22012095		85005 or 89430	.....
		22012096		83221	.....
		22012166		85005 or 89430	.....
		22012169		83221	.....
1972-76	PS4620 P, 4650P Step Van (Walk-in)	22002293		85005 or 89430	.....
		22007701		85005 or 89430	.....
		22007751		83303	.....
		22012095		85005 or 89430	.....
		3192890		85005 or 89430	.....
		4940606		85005 or 89430	.....
		4975497		85005 or 89430	.....
	5000 Series (Topkick)				
1960-62	5000, B-5000, L-5000, S-5000 with 1618 or 16802 Axle	.....		.....	83221
1976-89	C Chassis - Conventional Cab	22002294		83304	.....
		22007752		83304	.....
		22007757		83304	.....
		22012096		.....	83221
		22012196		.....	83221
1975-80	C Chassis - Conventional Cab	4975510		83221	.....

Gabriel Part Numbers that appear in BLUE are GasSLX, adjustable shocks.\ Los números de parte Gabriel imprimidos en AZUL son amortiguadores ajustables GasSLX. \ Les numéros de pièce Gabriel imprimés en BLEU sont des amortisseurs ajustables GasSLX.

Gabriel® COMMERCIAL VEHICLE

Year Año Année	Model Modelo Modèle	O.E.M. #	Mount	Front Delantero Avant	Rear Trasero Arrière
	GMC TRUCK 5000 Series (Topkick) .. cont'd				
	C Chassis - Conventional Cab				
1990-06	- Front Shock	15123676		83136	.....
		88982682		83136	.....
1990-99	- Front Shock	15588554		83136	.....
		22064230		83136	.....
1990-99	- With 11000, 13500, 15000 lb Taperleaf Springs	22064231		.....	85324
1990-06	- With 15000, 19000, 21000 lb Multileaf Springs	15174902		.....	85071
		22064232		.....	85071
1983-99	C Chassis - Conventional Cab with 9100 to 17500 lb Rear Axle	22064432		.....	85050
1973-80	C, S Chassis - Conventional Cab	22007750		83207 or 89407	.....
		4975467		83207 or 89407	.....
		4975494		83207 or 89407	.....
1973-89	C,S Chassis - Conventional Cab and School Bus	22012095		.....	85005 or 89430
		22012166		.....	85005 or 89430
1973-80	C,S Chassis - Conventional Cab and School Bus	22012096		.....	83221
		3192892		.....	83221
1960-68	SP-5000, DSP-5000 School Bus	.....		.....	85307
		.....		85302 or 89420	.....
1963-66	Truck and School Bus	.....		85005 or 89430	.....
1963-68	W-5000, BW-5000, DW-5000	.....		85005 or 89430	.....
	Models with O.E.M. Number	88982684		83136	.....
		88982686		.....	85071
		88982688		.....	85336
	5500 Series (Topkick)				
1966-72	CE-5500, CG-5500, CM-5500, CS-5500 Conventional Cab	22012096		.....	83221
		3192892		.....	83221
1966-72	CE-5500, CS-5500 Conventional Cab with V-8 Gas or In-line 6 Gas Engines	22012096		83221	.....
		3192891		83221	.....
		3192892		83221	.....
1966-72	CG-5500, CM-5500, T-5500 Conventional & Tilt Cab with V-6 Gas or Diesel Engines	22012095		85005 or 89430	.....
		3192890		85005 or 89430	.....
		4940606		85005 or 89430	.....
1966-72	EG-5500, EM-5500, ES-5500 Cab/Cowl with 6 Cyl. Engines	22012095		.....	85005 or 89430
		3171068		83216	.....
		3171462		.....	85005 or 89430
		3192657		83216	.....
		3192890		.....	85005 or 89430
		4940614		83216	.....
		4963853		83216	.....
		4963854		83216	.....

Gabriel Part Numbers that appear in BLUE are GasSLX, adjustable shocks.\ Los números de parte Gabriel imprimidos en AZUL son amortiguadores ajustables GasSLX. \ Les numéros de pièce Gabriel imprimés en BLEU sont des amortisseurs ajustables GasSLX.

Gabriel COMMERCIAL VEHICLE

Year Año Année	Model Modelo Modèle	O.E.M. #	Mount	Front Delantero Avant	Rear Trasero Arrière
GMC TRUCK 5500 Series (Topkick) .. cont'd					
1960-68	LW-5500	.....		85307	.....
1967-68	Truck and School Bus	.....		.....	83221
		.....		85005 or 89430	.....
1963-68	W-5500	.....		85005 or 89430	.....
	Models with O.E.M. Number	88982684		83136	.....
		88982686		.....	85071
		88982688		.....	85336
6000 Series (Topkick)					
1976-89	C Chassis - Conventional Cab	22002294		83304	.....
		22007752		83304	.....
		22007757		83304	.....
	C Chassis - Conventional Cab				
1990-06	- Front Shock	15123676		83136	.....
		88982682		83136	.....
1990-99	- Front Shock	15588554		83136	.....
		22064230		83136	.....
1990-99	- With 11000, 13500, 15000 lb Taperleaf Springs	22064231		.....	85324
1990-06	- With 15000, 19000, 21000 lb Multileaf Springs	15174902		.....	85071
		22064232		.....	85071
1992-06	- With 16900 or 17850 lb Taperleaf Springs	21998392		.....	85336
		88963409		.....	85336
		22064489		.....	85336
1992-99	- With 19000, 21000, 23000 lb Taperleaf Springs (EXC Low Profile Vehicle)	22064233		.....	83136
1983-99	C Chassis - Conventional Cab with 9100 to 17500 lb Rear Axle	22064432		.....	85050
1979-89	C, S Chassis - Conventional Cab and School Bus	22002295		83303	.....
		22007753		83303	.....
		22017530		83303	.....
		22017531		83303	.....
		4975510		83221	.....
1973-80	C, S Chassis - Conventional Cab and School Bus - Exc. with 18500, 20800 & 23000 lb Rear Axle	22012096		.....	83221
		3192892		.....	83221
		22007750		83207 or 89407	.....
		4975467		83207 or 89407	.....
		4975494		83207 or 89407	.....
1973-89	C, S Chassis - Conventional Cab and School Bus - Exc. with 20800 & 23000 lb Rear Axle	22012096		.....	83221
		22012169		.....	83221
		3192892		.....	83221
1973-89	C, S Chassis - Conventional Cab and School Bus with 18500, 20800 & 23000 lb Rear Axle	22012095		.....	85005 or 89430
		22012166		.....	85005 or 89430

Gabriel Part Numbers that appear in BLUE are GasSLX, adjustable shocks.\ Los números de parte Gabriel imprimidos en AZUL son amortiguadores ajustables GasSLX. \ Les numéros de pièce Gabriel imprimés en BLEU sont des amortisseurs ajustables GasSLX.

Gabriel COMMERCIAL VEHICLE

Year Año Année	Model Modelo Modèle	O.E.M. #	Mount	Front Delantero Avant	Rear Trasero Arrière
GMC TRUCK 6000 Series (Topkick) .. cont'd					
1973-89	C, S Chassis - Conventional Cab and School Bus with 20800 & 23000 lb Rear Axle	22012095		.....	85005 or 89430
		22012166		.....	85005 or 89430
		4940606		.....	85005 or 89430
1973-80	C, S, T Chassis - Conventional & Tilt Cab and School Bus with 5000 & 7000 lb Axle	22002293		85005 or 89430	.....
		22007701		85005 or 89430	.....
		22007751		83303	.....
		22012095		85005 or 89430	.....
		3192890		85005 or 89430	.....
		4940606		85005 or 89430	.....
		4940662		85005 or 89430	.....
		4975497		85005 or 89430	.....
1963-68	DW - 6000	.....		85005 or 89430	.....
1960-68	L - 6000	.....		85307	.....
1993-06	Models with 12000 lb RR SUSP(GZH) Heavy Duty	21998392		.....	85336
		88963409		.....	85336
1993-99	Models with 12000 lb RR SUSP(GZH) Heavy Duty	22064489		.....	85336
1995-99	Models with Hendrickson Air Suspension (Stamping number 47902-13)	12474915		.....	83122 or 89406
		15963161		.....	83122 or 89406
1996-99	Models with Hendrickson Air Suspension (Stamping number 47902-29)	12474917		.....	83121
		15740554		.....	83121
1979-89	S Chassis - School Bus	22002294		83304	.....
		22007752		83304	.....
		22007757		83304	.....
1979-80	W Chassis - 72" BBC Steel Tilt Cab	22002293		85005 or 89430	.....
		22007751		83303	.....
	Models with O.E.M. Number	88982684		83136	.....
		88982686		.....	85071
		88982688		.....	85336
6500 Series (Topkick)					
	C Chassis - Conventional Cab				
1990-06	- Front Shock	15123676		83136	.....
		88982682		83136	.....
1990-99	- Front Shock	15588554		83136	.....
		22064230		83136	.....
1990-99	- With 11000, 13500, 15000 lb Taperleaf Springs	22064231		.....	85324
1990-06	- With 15000, 19000, 21000 lb Multileaf Springs	15174902		.....	85071
		22064232		.....	85071
1992-06	- With 16900 or 17850 lb Taperleaf Springs	21998392		.....	85336
		88963409		.....	85336
1992-99	- With 16900 or 17850 lb Taperleaf Springs	22064489		.....	85336
1992-99	- With 19000, 21000, 23000 lb Taperleaf Springs (EXC Low Profile Vehicle)	22064233		.....	83136

Gabriel Part Numbers that appear in BLUE are GasSLX, adjustable shocks.\ Los números de parte Gabriel imprimidos en AZUL son amortiguadores ajustables GasSLX. \ Les numéros de pièce Gabriel imprimés en BLEU sont des amortisseurs ajustables GasSLX.

Gabriel® COMMERCIAL VEHICLE

GMC TRUCK 6500 Series (Topkick) .. cont'd

Year Año Année	Model Modelo Modèle	O.E.M. #	Mount	Front Delantero Avant	Rear Trasero Arrière
1976-89	C, M Chassis - Conventional Cab	22002294		83304	.....
		22007752		83304	.....
		22007757		83304	.....
1975-76	C, M Chassis - Conventional Cab	4975510		83221	.....
1976-89	C, M Chassis - Conventional Cab with 9000 & 12000 lb Axle	22002295		83303	.....
		22017530		83303	.....
		22017531		83303	.....
		22007751		83303	.....
1975-76	C, M Chassis - Conventional Cab with 9000 & 12000 lb Axle	4975511		83303	.....
		22007751		83303	.....
1973-75	C, M Chassis - Conventional Cab with 9000 & 12000 lb Axle	22012095		85005 or 89430	.....
		3192890		85005 or 89430	.....
		4940606		85005 or 89430	.....
		4940614		83216	.....
		4963854		83216	.....
		4975497		85005 or 89430	.....
1973-75	C, M, S Chassis - Conventional Cab and School Bus	22007750		83207 or 89407	.....
		4975467		83207 or 89407	.....
		4975494		83207 or 89407	.....
1973-80	C, M, S Chassis - Conventional Cab and School Bus - Exc. with 20800 or 23000 lb Rear Axle	22012096		.....	83221
		22012169		.....	83221
		3192892		.....	83221
1973-80	C, M, S Chassis - Conventional Cab and School Bus with 20800 or 23000 lb Rear Axle	22012095		.....	85005 or 89430
		22012166		.....	85005 or 89430
		4940606		.....	85005 or 89430
1973-80	C, S, T Chassis - Conventional & Tilt Cab and School Bus	22002293		85005 or 89430	.....
		22007751		83303	.....
		22012095		85005 or 89430	.....
		3192890		85005 or 89430	.....
		4940606		85005 or 89430	.....
		4975497		85005 or 89430	.....
1966-72	CE-6500, CM-6500 Conventional Cab with V-6 Diesel or V-8 Gas Engine	3192892		.....	83221
1966-72	CE-6500, ME-6500 Conventional Cab with V-8 Gas Engine - Exc. 11000 lb Axle	22012096		83221	.....
		3192891		83221	.....
		3192892		83221	.....
1966-72	CE-6500, ME-6500 Conventional Cab with V-8 Gas Engine with 11000 lb Axle	22012095		85005 or 89430	.....
		3192890		85005 or 89430	.....
		4940606		85005 or 89430	.....

Gabriel Part Numbers that appear in BLUE are GasSLX, adjustable shocks.\ Los números de parte Gabriel imprimidos en AZUL son amortiguadores ajustables GasSLX. \ Les numéros de pièce Gabriel imprimés en BLEU sont des amortisseurs ajustables GasSLX.

Gabriel® COMMERCIAL VEHICLE

Year Año Année	Model Modelo Modèle	O.E.M. #	Mount	Front Delantero Avant	Rear Trasero Arrière
GMC TRUCK 6500 Series (Topkick) .. cont'd					
1966-72	CM-6500, TE-6500, TM-6500 Conventional Cab with V-6 Diesel or V-8 Gas Engine	22012095		85005 or 89430	.....
		22012096		.....	83221
		3192890		85005 or 89430	.....
		4940606		85005 or 89430	.....
1963-68	DW-6500, W-6500	.....		85005 or 89430	.....
1966-72	EG-6500, DM-6500, ES-6500 Cab/Cowl with V-6 Gas or Diesel or In-line 6 Gas Engines	22012095		.....	85005 or 89430
		3171068		83216	.....
		3171462		.....	85005 or 89430
		3192657		83216	.....
		3192890		.....	85005 or 89430
		4963853		83216	.....
1960-68	L-6500	.....		85307	.....
1993-06	Models with 12000 lb RR SUSP(GZH) Heavy Duty	21998392		.....	85336
		88963409		.....	85336
1993-99	Models with 12000 lb RR SUSP(GZH) Heavy Duty	22064489		.....	85336
	Models with O.E.M. Number	88982684		83136	.....
		88982686		.....	85071
		88982688		.....	85336
7000 Series (Topkick)					
1960-68	BW-7000, D-7000, DB-7000, DW-7000, DBW-7000, DLW-7000, LW-7000 with F-110 & F-150 Axle	.....		85005 or 89430	.....
	C Chassis - Conventional Cab				
1990-06	- Front Shock	15123676		83136	.....
		88982682		83136	.....
1990-99	- Front Shock	15588554		83136	.....
		22064230		83136	.....
1990-06	- With 15000, 19000, 21000 lb Multileaf Springs	15174902		.....	85071
		22064232		.....	85071
1992-06	- With 16900 or 17850 lb Taperleaf Springs	21998392		.....	85336
		88963409		.....	85336
1992-99	- With 16900 or 17850 lb Taperleaf Springs	22064489		.....	85336
		22064233		.....	83136
1990-99	- With 19000, 21000, 23000 lb Taperleaf Springs (EXC Low Profile Vehicle)	22064233		.....	83136
1983-99	C Chassis - Conventional Cab with 9100 to 17500 lb Rear Axle	22064432		.....	85050
1979-89	C, M Chassis - 97" BBC Conventional Cab	22002294		83304	.....
		22002295		83303	.....
		22007752		83304	.....
		22007753		83303	.....
		22007757		83304	.....
		22017530		83303	.....
		22017531		83303	.....
1979-81	C, M Chassis - 97" BBC Conventional Cab - Exc. with 18500, 20800 & 23000 lb Rear Axle	22012096		.....	83221
		2212169		.....	83221

Gabriel Part Numbers that appear in BLUE are GasSLX, adjustable shocks.\ Los números de parte Gabriel imprimidos en AZUL son amortiguadores ajustables GasSLX. \
Les numéros de pièce Gabriel imprimés en BLEU sont des amortisseurs ajustables GasSLX.

Gabriel COMMERCIAL VEHICLE

Year Año Année	Model Modelo Modèle	O.E.M. #	Mount	Front Delantero Avant	Rear Trasero Arrière
GMC TRUCK 7000 Series (Topkick) .. cont'd					
1979-89	C, M Chassis - 97" BBC Conventional Cab with 18500, 20800 & 23000 lb Rear Axle	22012095		.....	85005 or 89430
		22012166		.....	85005 or 89430
1963-68	DBI-7000 with FO-90 Axle	.....		85302 or 89420	.....
1963-68	DF-7000, DFI-7000, DFW-7000, DFWI-7000	.....		85302 or 89420	.....
1993-06	Models with 12000 lb RR SUSP(GZH) Heavy Duty	21998392		.....	85336
		88963409		.....	85336
		22064489		.....	85336
1995-99	Models with Hendrickson Air Suspension (Stamping number 47902-13)	12474915		.....	83122 or 89406
		15963161		.....	83122 or 89406
1996-99	Models with Hendrickson Air Suspension (Stamping number 47902-29)	12474917		.....	83121
		15740554		.....	83121
1979-80	W Chassis - 72" BBC Steel Tilt Cab	22002293		85005 or 89430	.....
		22007751		83303	.....
	Models with O.E.M. Number	88982684		83136	.....
		88982686		.....	85071
		88982688		.....	85336
7100 Series					
1963-68	DF-7100, DFW-7100 Model 450M	.....		85302 or 89420	.....
7500 Series					
1993-06	12000 lb RR SUSP(GZH) Heavy Duty	21998392		.....	85336
		88963409		.....	85336
1993-99	12000 lb RR SUSP(GZH) Heavy Duty	22064489		.....	85336
1992-06	16900 lb Taperleaf Springs RR SUSP(GZH) Heavy Duty	21998392		.....	85336
		88963409		.....	85336
1992-99	16900 lb Taperleaf Springs RR SUSP(GZH) Heavy Duty	22064489		.....	85336
1966-69	72" BBC Tilt Cab	22012095		85005 or 89430	.....
		3171462		85005 or 89430	.....
		4940606		85005 or 89430	.....
1966-72	72" BBC Tilt Cab with V-6 2 Cycle Diesel Engine with 17221 Axle	22012096		.....	83221
		3192892		.....	83221
1966-72	72" BBC Tilt Cab with V-6 2 Cycle Diesel Engine with 19101 and 19201 Axle	4940600		.....	83209 or 89414
1970-72	72" BBC Tilt Cab with Air Brakes - Exc. Gas Engine	22012095		85005 or 89430	.....
		3171462		85005 or 89430	.....
		4940606		85005 or 89430	.....
1970-72	72" BBC Tilt Cab with Air Brakes & Gas Engine	22012091		85303	.....
		5552452		85303	.....
1966-68	92" BBC Conventional Cab	.....		.....	83221
		.....		83216	.....

Gabriel Part Numbers that appear in BLUE are GasSLX, adjustable shocks.\ Los números de parte Gabriel imprimidos en AZUL son amortiguadores ajustables GasSLX. \ Les numéros de pièce Gabriel imprimés en BLEU sont des amortisseurs ajustables GasSLX.

Gabriel® COMMERCIAL VEHICLE

Year Año Année	Model Modelo Modèle	O.E.M. #	Mount	Front Delantero Avant	Rear Trasero Arrière
GMC TRUCK 7500 Series (Topkick) .. cont'd					
1966-72	92" BBC Conventional Cab with Tapered 2-Leaf Softride 11000 lb Rating and F120 Axle (12000 lb)	22046483		85304	.....
		22052336		85304	.....
		3171069		85304	.....
1966-72	92" BBC Conventional Cab with Tapered 2-Leaf Softride 7000 & 9000 lb Rating and F070, F090, F120 Axle (7000, 9000 & 12000 lb)	3171068		83216	.....
		3192657		83216	.....
		4940614		83216	.....
		4963853		83216	.....
		4963854		83216	.....
1990-06	C Chassis - Conventional Cab	15123676		83136	.....
		88982682		83136	.....
1990-99	C Chassis - Conventional Cab	15588554		83136	.....
		22064230		83136	.....
1990-99	C Chassis - Conventional Cab with 11000, 13500, 15000 lb Taperleaf Springs	22064231		.....	85324
1990-06	C Chassis - Conventional Cab with 15000, 19000, 21000 lb Multileaf Springs	15174902		.....	85071
		22064232		.....	85071
1995-06	C Chassis - Conventional Cab with 17850 lb Taperleaf Springs	21998392		.....	85336
		88963409		.....	85336
1995-99	C Chassis - Conventional Cab with 17850 lb Taperleaf Springs	22064489		.....	85336
1992-99	C Chassis - Conventional Cab with 19000, 21000, 23000 lb Taperleaf Springs (EXC Low Profile Vehicle)	22064233		.....	83136
1977-80	H, J Chassis - 92" BBC Conventional Cab	4963854		83216	.....
		4984526		83216	.....
1973-80	H, J, M Chassis - 92" & 114" BBC Conventional Cab	22046483		85304	.....
		22052336		85304	.....
		3171069		85304	.....
1973-80	H, J, M Chassis - 92" & 114" BBC Conventional Cab with V-6, V-8 Gas or V-6 Diesel Engines	4940614		83216	.....
		4963854		83216	.....
1973-80	R Chassis - Rear Engine Bus	22012090		85308 or 89422	.....
		22012091		.....	85303
		5552451		85308 or 89422	.....
		5552452		.....	85303
		5552456		.....	85307
1973-80	T, W Chassis - 72" BBC Steel Tilt Cab with V-6 Diesel Engine	22007751		83303	.....
		22012095		85005 or 89430	.....
		4940606		85005 or 89430	.....
		4975497		85005 or 89430	.....
1973-80	T, W Chassis - 72" BBC Steel Tilt Cab with V-6 Gas Engine	22012091		85303	.....
		5552452		85303	.....
1967-68	Truck and School Bus - Exc. 92" BBC Conventional Cab	.....		85005 or 89430	.....
		.....		.....	83221
8500 Series					
1966-72	72" BBC Tilt Cab	5544060		85302 or 89420	.....
1966-68	92" BBC Conventional Cab	.....		83216	.....
		.....		.....	83221

Gabriel Part Numbers that appear in BLUE are GasSLX, adjustable shocks.\ Los números de parte Gabriel imprimidos en AZUL son amortiguadores ajustables GasSLX. \
Les numéros de pièce Gabriel imprimés en BLEU sont des amortisseurs ajustables GasSLX.

Gabriel® COMMERCIAL VEHICLE

Year Año Année	Model Modelo Modèle	O.E.M. #	Mount	Front Delantero Avant	Rear Trasero Arrière
GMC TRUCK 8500 Series (Topkick) .. cont'd					
1967	92" BBC Conventional Cab	3171068		83216	.....
		3192657		83216	.....
		4940614		83216	.....
		4963853		83216	.....
		4963854		83216	.....
1966-72	92" BBC Conventional Cab with 7000 & 9000 lb Axles	22046483		85304	.....
		22052336		85304	.....
		3171069		85304	.....
1979-80	D, F Chassis - 54" BBC Aluminum Tilt Cab	22046483		85304	.....
		22052336		85304	.....
		3171069		85304	.....
1978-81	H, J Chassis - 92" BBC Conventional Cab	4963854		83216	.....
		4984526		83216	.....
1979-82	H, J Chassis - 92" BBC Conventional Cab 4 x 2 with Air Suspension	22012065		.....	85304
		22046483		.....	85304
		22052336		.....	85304
		3171069		.....	85304
1979-82	H, J Chassis - 92" BBC Conventional Cab 4 x 2 with F090 & F120 Axles	22012065		.....	85304
		22046483		.....	85304
		22052336		.....	85304
		3171069		.....	85304
1973-81	H, J Chassis - 92" BBC Conventional Cab with V-6, V-8 Gas Engine	4940614		83216	.....
		4963854		83216	.....
1973-86	H, J, M Chassis - 92" & 114" BBC Conventional Cab	22046483		85304	.....
		22052336		85304	.....
		3171069		85304	.....
1973-80	R Chassis - Rear Engine Bus	22012090		85308 or 89422	.....
		22012091		.....	85303
		5552451		85308 or 89422	.....
		5552452		.....	85303
		5552456		.....	85307
1973-80	T, W Chassis - 72" BBC Steel Tilt Cab with V-6 Gas Engine	22012091		85303	.....
		5552452		85303	.....
1967-68	Truck and School Bus - Exc. 92" BBC Conventional Cab	.....		.....	83221
		.....		85005 or 89430	.....
9500 Series					
1967	114" BBC Conventional Cab	22046483		85304	.....
		22052336		85304	.....
		3171069		85304	.....
1972	114" BBC Conventional Cab 6 x 4 with V-8 903 & NTC 350 Engine	22046483		85304	.....
		22052336		85304	.....
		3171069		85304	.....
1972	114" BBC Conventional Cab with V-8 71 Engine	4940614		83216	.....
		4963854		83216	.....
1966-72	48" BBC Aluminum Tilt Cab	5552454		85302 or 89420	.....
1966-72	54" BBC Aluminum Tilt Cab	22046483		85304	.....
		22052336		85304	.....
		3171069		85304	.....

Gabriel Part Numbers that appear in BLUE are GasSLX, adjustable shocks.\ Los números de parte Gabriel imprimidos en AZUL son amortiguadores ajustables GasSLX. \ Les numéros de pièce Gabriel imprimés en BLEU sont des amortisseurs ajustables GasSLX.

Gabriel® COMMERCIAL VEHICLE

Year Año Année	Model Modelo Modèle	O.E.M. #	Mount	Front Delantero Avant	Rear Trasero Arrière
GMC TRUCK 9500 Series (Topkick) .. cont'd					
1966-72	72" BBC Steel Tilt Cab	22012091		85303	.....
		5552452		85303	.....
1967	92" & 114" BBC Conventional Cab	3171068		83216	.....
		3192657		83216	.....
		4940614		83216	.....
		4963853		83216	.....
		4963854		83216	.....
1966-72	92" & 114" BBC Conventional Cab with 7000, 9000 and 12000 lb Axle	22046483		85304	.....
		22052336		85304	.....
		3171069		85304	.....
1966-68	92" BBC Conventional Cab	.....		83216	.....
1972	92" BBC Conventional Cab with 637, 671, NHC 250 & NH230 Engines	4940614		83216	.....
		4963854		83216	.....
1972	92" BBC Conventional Cab with V-8 71, NHC 270, NHC 335 & V-8 903 Engines	22046483		85304	.....
		22052336		85304	.....
		3171069		85304	.....
1973-89	D, F Chassis - 54" BBC Aluminum Cab	22012065		85304	.....
		22046483		85304	.....
		22052336		85304	.....
		3171069		85304	.....
1973-89	D, F Chassis - 54" BBC Aluminum Tilt Cab with Rear GM Air-Ride Suspension (4 req'd)	22012065		.....	85304
		22046483		.....	85304
		22052336		.....	85304
		3171069		.....	85304
1973-89	H, J Chassis - 92" BBC Conventional Cab	22046483		85304	.....
		22052336		85304	.....
		3171069		85304	.....
1973-89	H, J Chassis - 92" BBC Conventional Cab with Rear GM Air-Ride Suspension (4 req'd)	22012065		.....	85304
		22046483		.....	85304
		22052336		.....	85304
		3171069		.....	85304
1977-89	M, N Chassis - 114" BBC Conventional & 108" BBC Aluminum Conventional Cab	22046483		85304	.....
		22052336		85304	.....
		3171069		85304	.....
1977-89	M, N Chassis - 114" BBC Conventional & 108" BBC Aluminum Conventional Cab with Rear GM Air-Ride Suspension (4 req'd)	22046483		.....	85304
		22052336		.....	85304
		3171069		.....	85304
1973-80	T, W Chassis - 72" BBC Steel Tilt Cab	22012091		85303	.....
		5552452		85303	.....
1967-68	Truck and School Bus - Exc. 92" BBC Conventional Cab	.....		85005 or 89430	.....
B - Series					
	B7 School Bus Chassis				
1990-98	- With 11000, 13500, 15000 lb Taperleaf Springs	22064231		.....	85324
1990-06	- With 15000, 19000, 21000 lb Multileaf Springs	15174902		.....	85071
		22064232		.....	85071
1990-06	Models with O.E.M. Number	15123676		83136	.....
		88982682		83136	.....

Gabriel Part Numbers that appear in BLUE are GasSLX, adjustable shocks.\ Los números de parte Gabriel imprimidos en AZUL son amortiguadores ajustables GasSLX. \
Les numéros de pièce Gabriel imprimés en BLEU sont des amortisseurs ajustables GasSLX.

Gabriel COMMERCIAL VEHICLE

Year Año Année	Model Modelo Modèle	O.E.M. #	Mount	Front Delantero Avant	Rear Trasero Arrière
GMC TRUCK B - Series .. cont'd					
1990-98	Models with O.E.M. Number	15588554		83136	.....
		22064230		83136	.....
1993-96	Models with O.E.M. Number	22064231		.....	85324
C - Series (C5500, C6500, C7500, C8500)					
	Conventional Cab				
1997-	- Front Shock	15123676		83136	.....
		15588554		83136	.....
		22064230		83136	.....
		88982682		83136	.....
1997-	- With 11000, 13500, 15000 lb Taperleaf Springs	22064231		.....	85324
1997-	- With 15000, 19000, 21000 lb Multileaf Springs	15174902		.....	85071
		22064232		.....	85071
1997-	- With 16900 or 17850 lb Taperleaf Springs	21998392		.....	85336
		22064489		.....	85336
		88963409		.....	85336
1997-	- With 19000, 21000, 23000 lb Taperleaf Springs (EXC Low Profile Vehicle)	22064233		.....	83136
Coaches					
	4100, 4900 Series	3182842		85711	85711
		3188599		85711	85711
		3192416		85711	85711
		4975552		85711	85711
	4500, 5300 Series	3166657		85700	85700
		3192333		85700	85700
	Models with O.E.M. Number	3175509		85735	85735
		3178106		85700	85700
		3178507		85700	85700
		3178995		85700	85700
		3189265		85700	85700
		5304059		85700	85700
		5316784		85700	85700
		5316794		85700	85700
		5316984		85313	85313
		5352857		85700	85700
		5527271		85700	85700
		5527272		85700	85700
		5549924		85700	85700
P - Series					
1992-96	Motorhome Chassis	22064231		.....	85324
		22064233		.....	83136
T - Series (T5500, T6500, T7500, T8500)					
1997-	FL1 Tilt Cab with 8100 lb Axle	22064804		83136	.....
		22064805		83136	.....
		22165187		83136	.....
		22165188		83136	.....
1997-	FL2 Tilt Cab with 5000 to 11000 lb Axle	22064807		83136	.....
		22166442		83136	.....

Gabriel Part Numbers that appear in BLUE are GasSLX, adjustable shocks.\ Los números de parte Gabriel imprimidos en AZUL son amortiguadores ajustables GasSLX. \ Les numéros de pièce Gabriel imprimés en BLEU sont des amortisseurs ajustables GasSLX.

Gabriel® COMMERCIAL VEHICLE

Year Año Année	Model Modelo Modèle	O.E.M. #	Mount	Front Delantero Avant	Rear Trasero Arrière

GMC TRUCK T - Series (T5500, T6500, T7500, T8500) .. cont'd

1997-	FL3 Tilt Cab with 14575 lb Axle	22064806		83136	.....
		22165189		83136	.....
1999	Models with Hendrickson Air Suspension (Stamping number 47902-13)	15963161		.....	83122 or 89406
		12474915		.....	83122 or 89406
1990-99	Tilt Cab with 11000, 13500, 15000 lb Taperleaf Springs	22064231		.....	85324
1990-06	Tilt Cab with 15000, 19000, 21000 lb Multileaf Springs	15174902		.....	85071
		22064232		.....	85071
1992-06	Tilt Cab with 16900 lb Taperleaf Springs RR SUSP(GZH) Heavy Duty	21998392		.....	85336
		88963409		.....	85336
1992-99	Tilt Cab with 16900 lb Taperleaf Springs RR SUSP(GZH) Heavy Duty	22064489		.....	85336
1992-99	Tilt Cab with 19000, 21000, 23000 lb Taperleaf Springs (EXC Low Profile Veh.)	22064233		.....	83136

W - Series (Isuzu)

1983-95	W4 Series	8-51630-666-0		.....	85012 or 89413
1986-90	W4 Series	8-94454-986-0		G60177	.....
		8-94454-987-0		G60177	.....
		9-51630-647-1		G60177	.....
1989-92	W4 Series Flatlow	8-51630-666-0		.....	85012 or 89413
1989-90	W4 Series Flatlow	9-51630-647-1		G60177	.....
86-Aug95	W4 Series with 11000 lb Suspension	97083027		G60177	.....
1987-96	W4 Series with 13000 lb Suspension	94454987		G60177	.....
		97083029		G60177	.....
1988-99	W5 Series	1-51630-217-0		83114	.....
		1-51630-217-1		83114	.....
		1-51630-219-1		83114	.....
1986-91	W6 Series	1-51630-168-1		G60107	.....
		1-51630-217-1		83114	.....
	Models with O.E.M. Number	8-97083-029-0		G60177	.....
		90044769		.....	83207 or 89407
		90044770		.....	83207 or 89407
		94033786		.....	83114
		94051090		83114	.....
		94057593		83114	.....
		94454987		G60177	.....
		97083027		G60177	.....
		97083029		G60177	.....

	Models with O.E.M. Number	15642943		.....	83136
		22099889		.....	85336
	Additional O.E.M. Interchanges	22007703		83303	
		22012067		85700	
		22012079		85701	
		22012082		85702	
		22012083		85711	
		22012090		85308 or 89422	
		22012091		85303	
		22012114		85700	

Gabriel Part Numbers that appear in BLUE are GasSLX, adjustable shocks.\ Los números de parte Gabriel imprimidos en AZUL son amortiguadores ajustables GasSLX. \
Les numéros de pièce Gabriel imprimés en BLEU sont des amortisseurs ajustables GasSLX.

Gabriel COMMERCIAL VEHICLE

GMC TRUCK .. cont'd

Year Año Année	Model Modelo Modèle	O.E.M. #	Mount	Front Delantero Avant	Rear Trasero Arrière
	Additional O.E.M. Interchanges	22012131			85711
		22017530			83303
		22024062			85701
		22024673			85710
		22045526			85702
		22046481			85702
		22046485			85710
		22046499			85710
		22052014			85702
		22052424			85710
		3171696			85307
		3172948			85303
		3175509			85735
		3178157			85700
		3178233			85734
		3178507			85700
		3178995			85700
		3188626			85300 or 89419
		3188729			85303
		4939852			85308 or 89422
		4939967			85308 or 89422
		4940601			83216
		4940627			83203 or 89436
		4940640			83216
		4940650			83207 or 89407
		4940654			83216
		4940660			83207 or 89407
		4963844			85307
		4963853			83216
		4964853			83217
		4974401			85700
		4975429			85300 or 89419
		4975479			83400
		4975480			83400
		4975515			85701
		4975516			85702
		4975518			85704
		4975538			85700
		4975549			83216
		4975550			85702
		5171068			83216
		5316784			85700
		5316791			83219
		5316792			85305
		5316793			85305
		5321920			85307
		5321929			85307
		5348631			83203 or 89436
		5352858			85305
		5353054			85303
		5355798			85307
		5357955			85300 or 89419
		5357956			85734
		5357959			85300 or 89419
		5361994			85734

Gabriel Part Numbers that appear in BLUE are GasSLX, adjustable shocks.\ Los números de parte Gabriel imprimidos en AZUL son amortiguadores ajustables GasSLX. \ Les numéros de pièce Gabriel imprimés en BLEU sont des amortisseurs ajustables GasSLX.

Gabriel® COMMERCIAL VEHICLE

GMC TRUCK .. cont'd

Year / Año / Année	Model / Modelo / Modèle	O.E.M. #	Mount	Front / Delantero / Avant	Rear / Trasero / Arrière
	Additional O.E.M. Interchanges	5374779			85308 or 89422
		5374999			85307
		5385939			85307
		5392387			85303
		5394448			85305
		5394467			85305
		5394468			85735
		5455798			85307
		5513489			83216
		5513716			85304
		5516459			85305
		5522781			85735
		5522794			85308 or 89422
		5522818			85305
		5527001			85300 or 89419
		5527271			85700
		5527272			85700
		5527606			85305
		5531027			85301
		5531435			85307
		5531436			85307
		5531437			85307
		5532026			85304
		5532425			83207 or 89407
		5532433			83207 or 89407
		5532675			85307
		5534430			85303
		5534439			85304
		5534447			85303
		5544112			83216
		5544581			85302 or 89420
		5544716			85304
		5544717			85304
		5544812			83308
		5544818			85735
		5549899			83207 or 89407
		5549924			85700
		5549925			85304
		5552111			85304
		5552112			85307
		5552114			83216
		5552205			83217
		5552206			83214
		5552207			83217
		5552208			83217
		5552209			83215
		5552210			85308 or 89422
		5552244			85308 or 89422
		5552285			83214
		5552286			83217
		5552287			83217
		5552288			83217
		5552453			85301
		5552527			85735
		5554184			85302 or 89420

Gabriel Part Numbers that appear in BLUE are GasSLX, adjustable shocks.\ Los números de parte Gabriel imprimidos en AZUL son amortiguadores ajustables GasSLX. \
Les numéros de pièce Gabriel imprimés en BLEU sont des amortisseurs ajustables GasSLX.

Gabriel® COMMERCIAL VEHICLE

Year Año Année	Model Modelo Modèle	O.E.M. #	Mount	Front Delantero Avant	Rear Trasero Arrière
GMC TRUCK .. cont'd					
	Additional O.E.M. Interchanges	5554589		85307	
		5554596		85303	
		5554814		85302 or 89420	
		5554959		83401	
		5554995		85305	
		5559363		83203 or 89436	
		5585939		85307	
		684280		83209 or 89414	
		97-2210-00153		85701	
		97-2210-00164		85708	
		97-2210-00170		85733	
GRANNING SUSPENSION					
	Model L120 Self Steer Axle	701071-01		646155	646155
	Models T950-1200, -1400, -1700	2697		.....	85712
	Models with O.E.M. Number	1085		.....	83214
		680162		.....	85300 or 89419
GREAT DANE TRAILER					
	Identification of the trailer suspension is necessary to determine what section of the catalog to refer to. Some possible options can be Chalmers, Hendrickson, Neway, Ridewell, Reyco.				
	Reyco Suspension 87	18163-01		.....	83207 or 89407
		18165-01		.....	85006
	Reyco Suspension 88	18164-01		.....	83122 or 89406
GREYHOUND BUS					
	City Cruiser	12 TA-01-013		85303	85303
	MC5, MC7, MC8	12B-5-1		85700	85700
		3178157		85700	85700
	Additional O.E.M. Interchanges	3166657		85700	
		3178154		85735	
		3192333		85700	
		5316984		85313	
		690029		85700	
GRUMMAN BUS					
	Model 870 Flex Bus	22024506		85703	.....
		22025066		85703	.....
		22025067		.....	85704
		22025305		.....	85704
		97-2201-00001		85703	.....
		97-2201-00002		85703	.....
		97-2201-00003		85703	.....
		97-2201-00004		85703	.....
		97-2201-00005		85703	.....
		97-2210-00001		.....	85704
		97-2210-00002		.....	85704
		97-2210-00003		.....	85704
		97-2210-00004		.....	85704
		97-2210-00005		.....	85704

Gabriel Part Numbers that appear in BLUE are GasSLX, adjustable shocks.\ Los números de parte Gabriel imprimidos en AZUL son amortiguadores ajustables GasSLX. \ Les numéros de pièce Gabriel imprimés en BLEU sont des amortisseurs ajustables GasSLX.

Gabriel® COMMERCIAL VEHICLE

Year Año Année	Model Modelo Modèle	O.E.M. #	Mount	Front Delantero Avant	Rear Trasero Arrière
HARDEE MFG					
	Models with O.E.M. Number	8030223		.....	83207 or 89407
		AS789B		.....	85014
HAUSMAN					
	Models with O.E.M. Number	695110		.....	85318
		695119		.....	85702
		695198		.....	85706
HENDRICKSON TRAILER SUSPENSION SYSTEMS					
Top Mount Style					
	HT190T (All Models)	A-20001		.....	85000 or 89436
	HT230-14-007, -15-007, N-HT230-14-007, -15-007	A-2160		.....	85014
	HT230T (All except HT230-14-007, -15-007, N-HT230-14-007, -15-007)	A-20002		.....	85000 or 89436
	HT250T (All Models)	A-2212		.....	85029
	HT300T & N-HT300 -15-007, -15-011, -17-007, -17-012)	S-2160		.....	85014
	HT300T (All except HT300 & N-HT300 -15-007, -15-011, -17-007, -17-012)	A-20126		.....	85323 or 89436
	T-15-140, -155, -172, 244, -376	A-2218		.....	85030 or 89440
	T-15-324	A-2160		.....	85014
	T-17-141, -174, -284	A-2218		.....	85030 or 89440
	TMB-14-120	A-2213		.....	85010
	TMB-17-135	A-4084		.....	85005 or 89430
UnderSlung Style					
	HT190U (All except HT190U-6.75-001)	A-20001		.....	85000 or 89436
	HT190U-6.75-001	A-2212		.....	85029
	HT250U (All except HT250U-7.5-021, -9-020, -9-021)	A-20002		.....	85000 or 89436
	HT250U-7.5-021	A-1667		.....	85000 or 89436
	HT250U-9-020, -9-021)	A-2212		.....	85029
	HT250US (Models with O.E.M. Number)	B-21936		.....	85938
		B-21947		.....	85052
		B-22862		.....	85045
		B-23649		.....	85938
		B-23650		.....	85052
		B-23651		.....	85045
	HT250U-Y (All Models)	A-20002		.....	85000 or 89436
	HT300U (All Models)	A-20126		.....	85323 or 89436
	T-12-139	A-2213		.....	85010
	T-23-US-9-011	A-2213		.....	85010
	T30-US-9, -17	A-10348		.....	85043
	T-4-392	A-2160		.....	85014

Gabriel Part Numbers that appear in BLUE are GasSLX, adjustable shocks.\ Los números de parte Gabriel imprimidos en AZUL son amortiguadores ajustables GasSLX. \
Les numéros de pièce Gabriel imprimés en BLEU sont des amortisseurs ajustables GasSLX.

Gabriel® COMMERCIAL VEHICLE

Year Año Année	Model Modelo Modèle	O.E.M. #	Mount	Front Delantero Avant	Rear Trasero Arrière
HENDRICKSON TRAILER SUSPENSION SYSTEMS UnderSlung Style .. cont'd					
	T-6-062, -295, -370, -422	A-1667		.....	85000 or 89436
	T-6-071	A-2212		.....	85029
	T-9-084	A-2240		.....	85013 or 89414
	T-9-106, -278, -313	A-4084		.....	85005 or 89430
	T-9-175	A-2160		.....	85014
	T-9-325	A-2218		.....	85030 or 89440
	T-9-390	A-2213		.....	85010
Others					
	AA230T & AA250T (Intrax Models with O.E.M. Number)	A-20002		.....	85000 or 89436
		A-20126		.....	85323 or 89436
		A-20889		.....	85323 or 89436
		B-22345		.....	85911
		B-23361		.....	85911
		B-23566		.....	85000 or 89436
		B-24125		.....	85323 or 89436
	AB-32-001	A-1667		.....	85000 or 89436
	HK190T (Slider Air Suspension)	A-21292		.....	85052
	HK230 (Slider Air Suspension)	A-21292		.....	85052
	HKA180	A-20001		.....	85000 or 89436
		B-24088		.....	85000 or 89436
	HKA200	A-20002		.....	85000 or 89436
		B-23566		.....	85000 or 89436
	HKA200 (Hvy Duty)	A-20126		.....	85323 or 89436
		B-24125		.....	85323 or 89436
	HKA250	A-20002		.....	85000 or 89436
		B-23566		.....	85000 or 89436
	HKA250 (Hvy Duty)	A-20126		.....	85323 or 89436
		B-24125		.....	85323 or 89436
	HS190T (Slider Air Suspension)	A-20001		.....	85000 or 89436
	HS230 (Slider Air Suspension)	A-20002		.....	85000 or 89436
	MT-45,MTL45,MTL-50	S-1667		.....	85000 or 89436
	TDC-014	A-2212		.....	85029

Gabriel Part Numbers that appear in BLUE are GasSLX, adjustable shocks.\ Los números de parte Gabriel imprimidos en AZUL son amortiguadores ajustables GasSLX. \ Les numéros de pièce Gabriel imprimés en BLEU sont des amortisseurs ajustables GasSLX.

Gabriel® COMMERCIAL VEHICLE

Year Año Année	Model Modelo Modèle	O.E.M. #	Mount	Front Delantero Avant	Rear Trasero Arrière

HENDRICKSON TRAILER SUSPENSION SYSTEMS Others .. cont'd

	Models with O.E.M. Number	A-10348		85043	85043
		A-14583		85000 or 89436	.....
		A-1668		.....	85000 or 89436
		A-20345		.....	.....
		A-20819		.....	.....
		A-20887		.....	85005 or 89430
		A-21292		.....	85052
		A-2230		85005 or 89430	.....
		A-2232		85005 or 89430	.....
		A-2240-1		85043	.....
		A-2471		.....	85006
		A-4089		83209 or 89414	.....
		A-4890		.....	85712
		B-21832		.....	85323 or 89436
		B-21936		.....	85938
		B-22312		.....	85939
		B-23362		.....	89437
		B-23649		.....	85938
		B-23743		.....	85938
		B-24023		.....	85738
		B-24579		.....	85939
		B-25437		.....	85337
		B-25515		.....	85338
	Additional O.E.M. Interchanges	A-20886		89440	
		B-22311		85045	
		B-25436		89430	

HENDRICKSON TRUCK SUSPENSION SYSTEMS

	Airtek Front	58913-003		85932 or 89453	.....
		64838-001		85933 or 89454	.....
		64838-002		85933 or 89454	.....
	HA - 180 (Used on all except Mack)	47902-13		.....	83122 or 89406
		47902-8		.....	83122 or 89406
	HA - 200 (Used on all except Mack)	47902-13		.....	83122 or 89406
		47902-8		.....	83122 or 89406
	HA - 230 (Used on all except Mack)	47902-13		.....	83122 or 89406
		47902-8		.....	83122 or 89406
	HA - 360 (Used on all except Mack)	47902-13		.....	83122 or 89406
		47902-8		.....	83122 or 89406

Gabriel Part Numbers that appear in BLUE are GasSLX, adjustable shocks.\ Los números de parte Gabriel imprimidos en AZUL son amortiguadores ajustables GasSLX. \
Les numéros de pièce Gabriel imprimés en BLEU sont des amortisseurs ajustables GasSLX.

Gabriel® COMMERCIAL VEHICLE

Year Año Année	Model Modelo Modèle	O.E.M. #	Mount	Front Delantero Avant	Rear Trasero Arrière
	HENDRICKSON TRUCK SUSPENSION SYSTEMS .. cont'd				
	HA - 400 (Used on all except Mack)	47902-13		.....	83122 or 89406
		47902-8		.....	83122 or 89406
	HA - 460 (Used on all except Mack)	47902-13		.....	83122 or 89406
		47902-8		.....	83122 or 89406
	HA Series Air Suspension (All Series used on Mack)	47902-9		.....	83123 or 89405
		47902-19		.....	83123 or 89405
	HA-360/400/460 Edge System High Torque Rise	60675-3		.....	.....
	HAS - 190	47902-15		.....	83121
		47902-24		.....	83121
	HAS - 210	47902-15		.....	83121
		47902-24		.....	83121
	HAS - 210 (Low Profile)	47902-19		.....	83123 or 89405
	HAS - 230	47902-15		.....	83121
		47902-24		.....	83121
	HAS - 230 (Low Profile)	47902-19		.....	83123 or 89405
	HAS - 360	47902-15		.....	83121
		47902-24		.....	83121
	HAS - 400	47902-24		.....	83121
	HAS - 400 (Mack & Kenworth Air Suspensions)	47902-25		.....	83125
	HAS - 402	47902-24		.....	83121
	HAS - 40LH	57241-1		.....	83111
	HAS - 40LH Edge System High Torque Rise	60685-1		.....	.....
	HAS - 460	47902-24		.....	83121
	HAS-210/230/400/402/460 Edge System High Torque Rise-Outboard Mount	60675-3		.....	.....
	HMX Haulmax	60680-4		.....	83143
		60680-5		.....	83142
	HN - 400	47902-11		.....	83207 or 89407
	HN - 402 (Bar Pin End Connection)	57241-3		.....	83112
	HN - 460	47902-11		.....	83207 or 89407
	HN - 460 (Modified Bar Pin End Connection)	57241-3		.....	83112
	HN - 462 (Bar Pin End Connection)	57241-3		.....	83112
	HNT - 460 Suspension	47902-18		.....	85030 or 89440
	MT-45,MTL45,MTL-50	S-1667		.....	85000 or 89436
	RT2 & RTE2 (400 / 520) Series Air Suspension (Note: For Ride Height of 10.41" to 12.27" with 52" & 54" Beams and 8.52" to 10.37" with 60" Beams.)	57324-6		.....	85904

Gabriel Part Numbers that appear in BLUE are GasSLX, adjustable shocks.\ Los números de parte Gabriel imprimidos en AZUL son amortiguadores ajustables GasSLX. \ Les numéros de pièce Gabriel imprimés en BLEU sont des amortisseurs ajustables GasSLX.

Gabriel COMMERCIAL VEHICLE

HENDRICKSON TRUCK SUSPENSION SYSTEMS .. cont'd

Year Año Année	Model Modelo Modèle	O.E.M. #	Mount	Front Delantero Avant	Rear Trasero Arrière
	Models with O.E.M. Number	12738		.....	83225
		47902-15		.....	83121
		47902-28		.....	85013 or 89414
		47902-3		85005 or 89430	.....
		503610C2		.....	83207 or 89407
		5554596		.....	85303
		57241-1		.....	83111
		57241-4		.....	83110
		57324-11		.....	85305
		57324-5		.....	85903
		60657-3		.....	85072
		60657-7		.....	85072
		60665-3		.....	83137
		60665-4		.....	85036 or 89405
		60665-9		.....	85904
		60670-7		.....	83144
		60670-8		.....	83123 or 89405
		60680-4		.....	83143
		60680-5		.....	83142
		680091		.....	85303
		70018		.....	85303
		70021		.....	85303
		70088		.....	85307
		AE76164-3		.....	85307
		AE76164-4		.....	83225
		BE76164-2		.....	85303
		BE76164-3		.....	85307
		BE76164-4		.....	83225
	Additional O.E.M. Interchanges	57241-6		83111	
		60665-1		.....	
		60665-2		.....	
		60665-5		.....	
		60670-1		83123 or 89405	
		60670-10		.....	
		60670-11		.....	
		60670-2		83207 or 89407	
		60670-3		83122 or 89406	
		60670-4		83123 or 89405	
		60670-5		83121	
		60670-6		83215	
		60670-9		85013 or 89414	
		60675-1		.....	
		60675-2		.....	
		60675-4		.....	
		60675-5		.....	
		60680-1		83111	
		60680-2		83109	
		60680-3		83112	
		60680-4		83143	
		60680-5		83142	

Gabriel Part Numbers that appear in BLUE are GasSLX, adjustable shocks.\ Los números de parte Gabriel imprimidos en AZUL son amortiguadores ajustables GasSLX. \
Les numéros de pièce Gabriel imprimés en BLEU sont des amortisseurs ajustables GasSLX.

Gabriel® COMMERCIAL VEHICLE

Year Año Année	Model Modelo Modèle	O.E.M. #	Mount	Front Delantero Avant	Rear Trasero Arrière
HIGHWAY PRODUCT					
	Transit Bus with Air Suspension	.....		83203 or 89436	.....
	Transit Bus with Leaf Spring Suspension	..... A1-6-134 A1-6-135		83203 or 89436 ..... 83203 or 89436	83203 or 89436 83207 or 89407 .....
HINO					
1989-96	FA14, FB14	48500-1950 48530-1910		G60107	 83216
1993-97	FA1415 (FA15), FB1715 (FB15)	48500-1950 48530-1910		G60107	 83216
1992-96	FA15, FB15	48500-1950 48530-1910		G60107	 83216
1998	FA1517, FA1817, FB1817	 48530-2510		..... G60107	G60075 .....
1986-87	FD16	48500-1801 48530-1880		83216	 83362
1988-91	FD17	48500-1801 48530-1880		83216	 83362
1992	FD20	48500-1801		83216	.....
1993-97	FD2218, FD2218LD (FD5H). FE5H, FF5H	48500-1801 48530-1880		83216	 83362
1998	FD2220, FD2220 Lo Pro	48500-1801		83216	.....
1986-87	FE16	48500-1801 48530-1890		83216	 83104
1984-91	FE17, FE19	48530-1900		.....	83104
1992	FE20	48530-1900		.....	83104
1993-97	FE2618 (FE5H)	48530-1900		.....	83104
1998	FE2620	48530-1880		.....	83362
1984-91	FF17, FF19	48530-1900		.....	83104
1992	FF20, FF23	48530-1900		.....	83104
1993-97	FF3018 (FF5H)	48530-1900		.....	83104
1993-97	FF3020 (FF4H)	48530-1900		.....	83104
1998	FF3320	48530-1880		.....	83362
1987-88	FFC1	48530-1900		.....	83104
1984-85	FG19, FG22	48530-1900		.....	83104
1990-91	GC17	48500-1801 48530-2050		83216	 83217
1992	GC20	48500-1801 48530-2050		83216	 83217

Gabriel Part Numbers that appear in BLUE are GasSLX, adjustable shocks.\ Los números de parte Gabriel imprimidos en AZUL son amortiguadores ajustables GasSLX. \ Les numéros de pièce Gabriel imprimés en BLEU sont des amortisseurs ajustables GasSLX.

Gabriel® COMMERCIAL VEHICLE

Year Año Année	Model Modelo Modèle	O.E.M. #	Mount	Front Delantero Avant	Rear Trasero Arrière

HINO .. cont'd

	Models with O.E.M. Number	48500-1800		83216	.....
		48500-1940		83141	.....
		48500-1941		83141	.....
		48500-3710		83126 or 89430	.....
		48500-3720		83140	.....
		48530-1120		.....	83104
		48530-1460		.....	83215
		48530-1620		.....	83104
		48530-1770		.....	83215

HOBBS TRAILERS

	Models with O.E.M. Number	680117		.....	85300 or 89419

HOLLAND (See NEWAY)

HOLLAND - BINKLEY

	Air Plus Integrated Air Susp. with ProPar Parallel Spindle Axles	6898		.....	83125
	Holland ProPar NT2 Air Suspension	680298		.....	85321

HUTCHENS SUSPENSION

	Models with O.E.M. Number	9423-00		.....	83203 or 89436

HYSTER

	Straddle Carrier	650150		83217	83217
		73516		83217	83217

INTERNATIONAL (NAVISTAR)

4300, 4400 Series School Bus

	Models with 12,000 lb Front axle	3533356C1		83135	.....
		3533356C2		83135	.....

A, B, AC and BC Conventional

	A-140 (4 x 4)	.....		.....	83216
	A-160, B-160, AC-160, BC-160	308649C91		.....	83216
		308650C91		.....	83216
		453567C91		.....	83216
	A-170, B-170, AC-170, BC-170, A-180, B-180, AC-180, BC-180	308646C91		85012 or 89413	.....
		308649C91		.....	83216
		308650C91		.....	83216
		453567C91		.....	83216
	AB-140	.....		G60021	G60021
	AC-170 & BC-170 (4 x 4)	.....		.....	83216
	AC-180 & BC-180 (4 x 4)	.....		.....	83216
	ACF-170 & BCF-170	308646C91		.....	85012 or 89413
	BCF-195-D	.....		.....	83225

Gabriel Part Numbers that appear in BLUE are GasSLX, adjustable shocks.\ Los números de parte Gabriel imprimidos en AZUL son amortiguadores ajustables GasSLX. \
Les numéros de pièce Gabriel imprimés en BLEU sont des amortisseurs ajustables GasSLX.

Gabriel® COMMERCIAL VEHICLE

INTERNATIONAL (NAVISTAR) A, B, AC and BC Conventional .. cont'd

Year Año Année	Model Modelo Modèle	O.E.M. #	Mount	Front Delantero Avant	Rear Trasero Arrière
	C-150	.....		G60021	.....
		308649C91		.....	83216
		308668C91		.....	85012 or 89413
		453556C91		.....	85012 or 89413
		453567C91		.....	83216

Binder

	Binder	453556C91		85012 or 89413	.....
		453571C91		.....	83216
		467983C91		85012 or 89413	.....
		467985C91		85012 or 89413	.....
		471201C91		85012 or 89413	.....
	S Series Binder	472367C91		83318	.....

Cargostar

	CO-1610A & B, CO-1630A & B, CO-1710A &B, CO-1730A & B, CO-1750A & B, CO-1810A & B, CO-1830A & B, COF-1810A & B - Exc. with 9000, 10800, or 12000 lb Front Axle	453572C91		83309 or 89446	.....
	CO-1610A & B, CO-1630A & B, CO-1710A &B, CO-1730A & B, CO-1750A & B, CO-1810A & B, CO-1830A & B, COF-1810A & B - With 9000, 10800, or 12000 lb Front Axle	873619C92		83314	.....
		873619C93		83314	.....
	CO-1600, CO-1610A & B, CO-1630A & B, CO-1700, CO-1710A & B, CO-1730A & B, CO-1750, CO-1750A & B, CO-1800, CO-1810A & B, CO-1830A & B, CO-1850, and CO-1850A & B	206620R91		.....	83216
		206621R92		.....	83216
		294334C91		.....	83216
		3085640C92		.....	83216
		308646C91		.....	85012 or 89413
		308649C91		.....	83216
		308650C92		.....	83216
		360444C91		.....	85012 or 89413
		453564C91		.....	85012 or 89413
		453567C91		.....	83216
		453570C91		.....	83216
		467983C91		.....	85012 or 89413
		467984C91		.....	83216
	CO-190, VCO-190, CO-200, DCO-200, VCO-200,CO-220, VCO-220 With Air Ride Suspension After Chassis No G-387453	350425C1		.....	85300 or 89419
		462557C91		.....	85300 or 89419
	CO-190, VCO-190, CO-200, DCO-200, VCO-200,CO-220, VCO-220 With Air Ride Suspension before Chassis No G-387453	350426C91		.....	85734

Gabriel Part Numbers that appear in BLUE are GasSLX, adjustable shocks.\ Los números de parte Gabriel imprimidos en AZUL son amortiguadores ajustables GasSLX. \ Les numéros de pièce Gabriel imprimés en BLEU sont des amortisseurs ajustables GasSLX.

Gabriel® COMMERCIAL VEHICLE

Year Año Année	Model Modelo Modèle	O.E.M. #	Mount	Front Delantero Avant	Rear Trasero Arrière
	INTERNATIONAL (NAVISTAR) Cargostar .. cont'd				
	CO-190, COF-190, VCO-190, VCOF-190 & CO-200, DCO-200, VCO-200 & CO-220, VCO-220 & VCO-190 (4 man cab)	204994R91		83225	.....
		210534R92		83225	.....
		288920C91		83225	.....
		288921R92		83225	.....
		308648C91		83225	.....
		452566C91		83225	.....
		453561C91		83225	.....
		453562C91		83225	.....
		453565C91		83225	.....
		453569C91		83225	.....
		467371C91		83225	.....
		467372C91		83225	.....
	CO-1910A & B, CO-1950A & B, COF-1910A& B, COF-1950A & B	453572C91		83309 or 89446	.....
		873619C92		83314	.....
	CO-1950 , COF-1950 &COT-1950	204994R91		83225	.....
		288920C91		83225	.....
		288921C91		83225	.....
		308648C91		83225	.....
		453561C91		83225	.....
		453565C91		83225	.....
		453566C91		83225	.....
		453569C91		83225	.....
		467371C91		83225	.....
		467372C91		83225	.....
	CO-1950 with Air Ride Suspension After Chassis No. G-387453	350425C1		.....	85300 or 89419
		462557C91		.....	85300 or 89419
	CO-1950 with Air Ride Suspension Before Chassis No. G-387453	350426C1		.....	85734
	Co- Transtar and Transtar II				
	7070B, F-7070B, CO-7070B & COF-7070B	426744R91		85303	.....
		426744R92		85303	.....
		453576C91		85303	.....
		453576C92		85303	.....
		477132C1		85303	.....
	CO-4010, COF-4010, COT-4010, COT-4010D, CO-4050, COF-4050, COT-4050, CO-4040A & B, CO-4070D, COF-4070B, COF-4070D, COT-4070D, COF-4077, COF-4077A, COF-4080D, CO-4090A, COF-4090A	426744R91		85303	.....
		426744R92		85303	.....
		453576C91		85303	.....
		453576C92		85303	.....
		477132C1		85303	.....
	CO-4070A, COF-4070A, COF-4090A with Rear Suspension	462557C91		.....	85300 or 89419
	F & S Series				
	1600, 1700, 1800, 1900, 2100 Series	3000070C91		83456 or 89447	.....
		453576C92		85303	.....

Gabriel Part Numbers that appear in BLUE are GasSLX, adjustable shocks.\ Los números de parte Gabriel imprimidos en AZUL son amortiguadores ajustables GasSLX. \ Les numéros de pièce Gabriel imprimés en BLEU sont des amortisseurs ajustables GasSLX.

Gabriel® COMMERCIAL VEHICLE

INTERNATIONAL (NAVISTAR) F & S Series .. cont'd

Year Año Année	Model Modelo Modèle	O.E.M. #	Mount	Front Delantero Avant	Rear Trasero Arrière
	1600, 1700, 1800, 1900, 2100 Series with International Air Suspension	1675455C1		.....	85003 or 89411
		1690035C1		.....	85003 or 89411
		2018987C1		.....	85003 or 89411
		501553C91		.....	85003 or 89411
	1600, 1700, 1800, 1900, 2100 Series with Neway ARD-234 Air Suspension	537524C91		.....	83123 or 89405
	1624, 1654, 1724, 1754, 1824, 1854, 1924, F1924, 1925, 1954, F1954, 1955, 2124, 2125, F2125, 2154, 2155 Series Exc. with Rear Axle Codes 14029, 14030, 14187	501905C91		.....	83301
		501906C91		.....	83317
	1624, 1654, 1724, 1754, 1824, 1854, 1924, F1924, 1925, 1954, F1954, 1955, 2124, 2125, F2125, 2154, 2155 Series with 5000, 6000 or 7500 lb Front Axle	472367C91		83318	.....
	1624, 1654, 1724, 1754, 1824, 1854, 1924, F1924, 1925, 1954, F1954, 1955, 2124, 2125, F2125, 2154, 2155 Series with 9000, 10800 or 12000 lb Front Axle	472411C91		83456 or 89447	.....
		472412C91		83456 or 89447	.....
		586724C91		83456 or 89447	.....
	1624, 1654, 1724, 1754, 1824, 1854, 1924, F1924, 1925, 1954, F1954, 1955, 2124, 2125, F2125, 2154, 2155 Series with Rear Axle Codes 14029, 14030, 14187	501905C91		.....	83301
	1924, 1954 (6 x 6) Series	472367C91		83318	.....
		472414C91		83318	.....
	2275, F2275, 2524, F2524, 2554, F2554, 2574, F2574, 2575, F2575, F2624, F2654, F2674 Series with 9000, 10800 or 12000 lb Front Axle	472411C91		83456 or 89447	.....
		472412C91		83456 or 89447	.....
		586724C91		83456 or 89447	.....
	2275, F2275, 2524, F2524, 2554, F2554, 2574, F2574, 2575, F2575, F2624, F2654, F2674 Series with International Corporate Air Suspension	1675455C1		.....	85003 or 89411
		1690035C1		.....	85003 or 89411
		2018987C1		.....	85003 or 89411
		501553C91		.....	85003 or 89411
	2275, F2275, 2524, F2524, 2554, F2554, 2574, F2574, 2575, F2575, F2624, F2654, F2674 Series with International Corporate Air Suspension - For Severe Use	1675455C1		.....	85003 or 89411
	2275, F2275, 2524, F2524, 2554, F2554, 2574, F2574, 2575, F2575, F2624, F2654, F2674 Series with International Corporate Air Suspension - For Standard Use	501553C91		.....	85003 or 89411
	2275, F2275, 2524, F2524, 2554, F2554, 2574, F2574, 2575, F2575, F2624, F2654, F2674 Series with Neway ARD-125/244 Air Suspension	790335C91		.....	83209 or 89414
	2275, F2275, 2524, F2524, 2554, F2554, 2574, F2574, 2575, F2575, F2624, F2654, F2674 Series with Neway ARD-234 Air Suspension	537524C91		.....	83123 or 89405
	2275, F2275, 2524, F2524, 2554, F2554, 2574, F2574, 2575, F2575, F2624, F2654, F2674 Series with Ridwell Rear Suspension	534464C1		.....	85734

Gabriel Part Numbers that appear in BLUE are GasSLX, adjustable shocks.\ Los números de parte Gabriel imprimidos en AZUL son amortiguadores ajustables GasSLX. \ Les numéros de pièce Gabriel imprimés en BLEU sont des amortisseurs ajustables GasSLX.

Gabriel® COMMERCIAL VEHICLE

INTERNATIONAL (NAVISTAR) .. cont'd

Firetruck

Year Año Année	Model Modelo Modèle	O.E.M. #	Mount	Front Delantero Avant	Rear Trasero Arrière
	CO-8190	204994R91		83225	.....
		308648C91		83225	.....
		453561C91		83225	.....
		453565C91		83225	.....
		467371C91		83225	.....
	Models with O.E.M. Number	210919R91		.....	85307

Fleetstar - Conventional

	1900, 1950, 2000 & 2000D	210535R91		83225	.....
		453568C91		83225	.....
		467372C91		83225	.....
	1910A, 2010A, 2050A, 2070A, 2110A & 2150A	308650C92		83216	.....
		453570C91		83216	.....
		467984C91		83216	.....
	2000D, 2010A, 2050A, 2070A, 2110A, 2150A with Air Ride Suspension After Chassis No G-387453	350425C1		.....	85300 or 89419
		462557C91		.....	85300 or 89419
	2000D, 2010A, 2050A, 2070A, 2110A, 2150A with Air Ride Suspension Before Chassis No G-387453	350426C1		.....	85734
	F-1900, T-1900, F-1950, T-1950, F-2000D, & T-2000D	210535R91		83225	.....
		453568C91		83225	.....
		467372C91		83225	.....
	F-1910A, F-2010A, F-2050A & F-2070A	206621R92		83216	.....
		308650C92		83216	.....
		453570C91		83216	.....
		467984C91		83216	.....
	F-2010A, F-2050A, F-2000D with Air Ride Suspension	350425C1		.....	85300 or 89419
		462557C91		.....	85300 or 89419
	R-185, R-190, RD-190, R-200, RD-200, RF-200, RDF-200, R-220, RD-220, R210 & RF-210	210533R91		83225	.....
		210534R92		83225	.....
		210535R91		83225	.....
		210536R91		83225	.....
		210537R91		83225	.....
		210538R91		83225	.....
		453562C91		83225	.....
		453568C91		83225	.....
		467371C91		83225	.....
		467372C91		83225	.....

Loadstar - Conventional

	1600	467983C91		85012 or 89413	.....
		471201C91		85012 or 89413	.....

Gabriel Part Numbers that appear in BLUE are GasSLX, adjustable shocks.\ Los números de parte Gabriel imprimidos en AZUL son amortiguadores ajustables GasSLX. \ Les numéros de pièce Gabriel imprimés en BLEU sont des amortisseurs ajustables GasSLX.

Gabriel® COMMERCIAL VEHICLE

Year Año Année	Model Modelo Modèle	O.E.M. #	Mount	Front Delantero Avant	Rear Trasero Arrière
INTERNATIONAL (NAVISTAR) Loadstar - Conventional .. cont'd					
	1600, 1600 (4x4), 1610, 1610 (4x4), 1610FC, 1700, 1700 (4x4), 1710, 1710 (4x4), F-1700, 1750, 1800, 1810, F-1800, F-1800-D, 1850, F-1850, 1890 & 1890-D with 9000, 10800 or 12000 lb Front Axle	329316C92		85012 or 89413	.....
		360444C91		85012 or 89413	.....
		453564C91		85012 or 89413	.....
		467983C91		85012 or 89413	.....
	1600, 1600 (4x4), 1610, 1610 (4x4), 1610FC, 1700, 1700 (4x4), 1710, 1710 (4x4), F-1700, 1750, 1800, 1810, F-1800, F-1800-D, 1850, F-1850, 1890 & 1890-D with Axle Codes 02089, 02091	206620R91		83216	.....
		308649C91		83216	.....
		453567C91		83216	.....
	1600, 1600 (4x4), 1610, 1610 (4x4), 1700, 1700 (4x4), 1710, 1710 (4x4), 1750, 1800, 1810, 1850, 1890 & 1890-D	206620R91		.....	83216
		206621R91		.....	83216
		308649C91		.....	83216
		308650C92		.....	83216
		329316C92		.....	85012 or 89413
		360444C91		.....	85012 or 89413
		383379C91		.....	83308
		453564C91		.....	85012 or 89413
		453567C91		.....	83216
		453570C91		.....	83216
		453575C91		.....	83308
		467983C91		.....	85012 or 89413
		467984C91		.....	83216
		471203C91		.....	83308
		474002C91		.....	83308
		873622C91		.....	83308
	1600, 1600 (4x4), 1610, 1610 (4x4), 1700, 1700 (4x4), 1710, 1710 (4x4), F-1700, 1750, 1800, 1810, F-1800, F-1800-D, 1850, F-1850, 1890 & 1890-D Exc. Axle Codes 02054, 02057, 02059, 02089, 02091, 02098, 02101, 02109, 02139, 02208, 02218, 02228, 02309, 0232	308668C92		85012 or 89413	.....
		453556C91		85012 or 89413	.....
		467985C91		85012 or 89413	.....
		874695R91		85012 or 89413	.....
		874695R92		85012 or 89413	.....
	1600, 1610FC, 1700, 1700 (4x4), 1800, 1890, 1890D	384435C91		.....	83216
		453571C91		.....	83216
		462753C91		.....	83216
	1700, 1750, 1800, 1850 with Air Ride Suspension	462557C91		.....	85300 or 89419
	M1600, M1700, M1800, M1900, M2100 Series	453576C92		85303	.....
Metro & Multi-Shop Series					
	AM and AMC-160, AMC-164	308649C91		83216	.....
		453567C91		83216	.....
	M1600, M1700, M1800, M1900, M2100 Series	453576C92		85303	.....
	M1600, M1700, M1800, M1900, M2100 Series - Exc. with Rear Axle Codes 14029, 14030, 14187	501905C91		.....	83301
		501906C91		.....	83317
	M1600, M1700, M1800, M1900, M2100 Series with 5000, 6000 or 7500 lb Front Axle	472367C91		83318	.....

Gabriel Part Numbers that appear in BLUE are GasSLX, adjustable shocks.\ Los números de parte Gabriel imprimidos en AZUL son amortiguadores ajustables GasSLX. \ Les numéros de pièce Gabriel imprimés en BLEU sont des amortisseurs ajustables GasSLX.

Gabriel® COMMERCIAL VEHICLE

Year Año Année	Model Modelo Modèle	O.E.M. #	Mount	Front Delantero Avant	Rear Trasero Arrière

INTERNATIONAL (NAVISTAR) Metro & Multi- Shop Series .. cont'd

	M1600, M1700, M1800, M1900, M2100 Series with 9000, 10800 or 12000 Front Axle	472411C91		83456 or 89447	.....
	M1600, M1700, M1800, M1900, M2100 Series with Front Axle Codes 02109, 02118, 02309, 02127, 02139, 02329, 02339	472412C91		83456 or 89447	.....
		586724C91		83456 or 89447	.....
	M1600, MC1600, M1700 & MC1700	206620R91		.....	83216
		308649C91		.....	83216
		308668C91		85012 or 89413	.....
		308669C91		85012 or 89413	.....
		453556C91		85012 or 89413	.....
		453597C91		.....	83216
		874695R91		85012 or 89413	.....
		874696R91		85012 or 89413	.....
	MA1200, M1400, M1500, MA1500	287318C91		G60021	G60021
		308649C91		.....	83216
		308669C91		.....	85012 or 89413
		453531C91		.....	G60021
		453556C91		.....	85012 or 89413
		453557C91		.....	G60021
		453567C91		.....	83216
		467980C91		G60021	G60021
1966- 72	Metro Series M1200 - Exc. Frame Code 01000.0962	.....		G60003	.....
1966- 72	Metro Series M1200 with 14016 Reg. Rear Springs & with 14020 Rear Axle Code	.....		G60021	G60021
1966- 72	Metro Series M1200 with Axle Code 0208 & Frame Code 01000.0962	.....		G60021	G60021
1966- 72	Metro Series M1200 with Code 03204 Aux. Springs	.....		.....	G60003
1966- 72	Metro Series M700, 800, 900-U, 1000, 1100,	.....		G60021	G60021
1973- 75	Multi-Stop Series MS-1210 & 1510	.....		.....	G60021

Paystar

	5010, F-5010, F-5050, F-5050SF, 5070, F-5070, F-5070SF	426744R91		85303	.....
		426744R92		85303	.....
		453576C91		85303	.....
		453576C92		85303	.....
		477132C1		85303	.....

S Series School Bus

	1603	467983C91		85012 or 89413	.....
		471201C91		85012 or 89413	.....

Gabriel Part Numbers that appear in BLUE are GasSLX, adjustable shocks.\ Los números de parte Gabriel imprimidos en AZUL son amortiguadores ajustables GasSLX. \ Les numéros de pièce Gabriel imprimés en BLEU sont des amortisseurs ajustables GasSLX.

Gabriel® COMMERCIAL VEHICLE

INTERNATIONAL (NAVISTAR) S Series School Bus .. cont'd

Year Año Année	Model Modelo Modèle	O.E.M. #	Mount	Front Delantero Avant	Rear Trasero Arrière
	1603, 1703, 1803 & 1853	206620R91		.....	83216
		206621R91		.....	83216
		306444C91		.....	85012 or 89413
		308649C91		.....	83216
		308650C92		.....	83216
		329316C92		.....	85012 or 89413
		383379C91		.....	83308
		453564C91		.....	85012 or 89413
		453567C91		.....	83216
		453570C91		.....	83216
		453575C91		.....	83308
		467983C91		.....	85012 or 89413
		471203C91		.....	83308
		474002C91		.....	83308
		873622C91		.....	83308
	1603, 1703, 1803 & 1853 - Exc. Axle Codes 02054, 02057, 02059, 02089, 02091, 02098, 02101, 02109, 02139, 02208, 02218, 02228, 02309, 02329, 02339	308668C92		85012 or 89413	.....
		453556C91		85012 or 89413	.....
		467985C91		85012 or 89413	.....
		874695R91		85012 or 89413	.....
	1603, 1703, 1803 & 1853 with Axle Codes 02089, 02091	206620R91		83216	.....
		308649C91		83216	.....
		453567C91		83216	.....
		467984C91		83216	.....
	1603, 1703, 1803 & 1853 with 9000, 10800 or 12000 lb Front Axle	320444C91		85012 or 89413	.....
		329316C92		85012 or 89413	.....
		453564C91		85012 or 89413	.....
		467983C91		85012 or 89413	.....
	1723 S Series with 5000, 6000 or 7500 lb Front Axle	472367C91		83318	.....
	1723, 1823, 1853 Series with International Air Suspension	1675455C1		.....	85003 or 89411
		1690035C1		.....	85003 or 89411
		2018987C1		.....	85003 or 89411
		501553C91		.....	85003 or 89411
	1723, 1823, 1853 Series with Neway ARD-234 Air Suspension	537524C91		.....	83123 or 89405
	173 FC & 183 FC - Exc. Axle Codes 14149 & 14189	210918R91		.....	83215
		453574C91		.....	85307
	173 FC & 183 FC with Axle Codes 14149 & 14189	210535R91		.....	83225
		453568C91		.....	83225
		467372C91		.....	83225

Gabriel Part Numbers that appear in BLUE are GasSLX, adjustable shocks.\ Los números de parte Gabriel imprimidos en AZUL son amortiguadores ajustables GasSLX. \ Les numéros de pièce Gabriel imprimés en BLEU sont des amortisseurs ajustables GasSLX.

Gabriel® COMMERCIAL VEHICLE

Year Año Année	Model Modelo Modèle	O.E.M. #	Mount	Front Delantero Avant	Rear Trasero Arrière

INTERNATIONAL (NAVISTAR) S Series School Bus .. cont'd

	173 FC, 183 FC, 183RE, 193 RE	204994R91		83225	.....
		308648C91		83225	.....
		453561C91		83225	.....
		453565C91		83225	.....
		467371C91		83225	.....
	1823 S Series - Exc. with Rear Axle Codes 14029,14030, 14187	501906C91		.....	83317
	1823, 1853 S Series with 9000, 10800 or 12000 lb Front Axle	472411C91		83456 or 89447	.....
		472412C91		83456 or 89447	.....
		586724C91		83456 or 89447	.....
	183 RE with Axle Codes 14043, 14147 & 14186	210533R91		.....	83225
		210534R92		.....	83225
		453562C91		.....	83225
		467371C91		.....	83225
	1853 DFC3	210920R91		85308 or 89422	.....
		453579C91		85308 or 89422	.....
	1853 FC & 1853 DFC	204994R91		83225	.....
		308648C91		83225	.....
		453561C91		83225	.....
		453565C91		83225	.....
		467371C91		83225	.....
	1853 FC & 1853 DFC with Axle Code 14136	210919R91		.....	85307
		308664C91		.....	85307
		453574C91		.....	85307
	1853 FC & 1853 DFC with Axle Code 14149 with FD Serial Numbers	453567C91		.....	83216
	1853 FC & 1853 DFC with Axle Codes 14039, 14139, 14149 & 14189 - Exc. 14149 with FD Serial Numbers	210533R91		.....	83225
		210534R92		.....	83225
		453562C91		.....	83225
		467371C91		.....	83225
	1853 FC & 1853 DFC with Axle Codes 14044, 14045, 14060, 14145, 14146, 14150 and 14186	208664C91		.....	85307
		210919R91		.....	85307
		453574C91		.....	85307
	193 RE	210920R91		85308 or 89422	.....
		453579C91		85308 or 89422	.....
	193 RE - Exc. Axle Codes 14039 & 14189	210533R91		.....	83225
		210534R92		.....	83225
		453562C91		.....	83225
		467371C91		.....	83225

Series 400, 500, 600, 700, & 900 - Medium Cabover Truck & Tractor (Nissan)

	400 Series	56101 Z5008		83114	.....
		56101 Z5011		G60164	.....
	500 Series	56101 Z5011		G60164	.....
	600, 700, 900 Series	56101 Z1030		85311 or 89424	.....
		56101 Z2000		85311 or 89424	.....

Gabriel Part Numbers that appear in BLUE are GasSLX, adjustable shocks.\ Los números de parte Gabriel imprimidos en AZUL son amortiguadores ajustables GasSLX. \ Les numéros de pièce Gabriel imprimés en BLEU sont des amortisseurs ajustables GasSLX.

Gabriel® COMMERCIAL VEHICLE

Year Año Année	Model Modelo Modèle	O.E.M. #	Mount	Front Delantero Avant	Rear Trasero Arrière

INTERNATIONAL (NAVISTAR) .. cont'd

Series 405

	D-405, DB-405, DC-405, DCO-405, DF-405 & VCO-405 - Exc. Axle Code 02136	426744R91		85303	.....
		453576C91		85303	.....
	DBF-405, DCF-405, DCOF-405 & VCOF-405 with Axle Code 02136	293009C91		85308 or 89422	.....
		426744R91		85303	.....
		453576C91		85303	.....
		453577C91		85308 or 89422	.....
	DT-405, DBT-405, DCT-405, DCOT-405 & VCOT-405 - Exc. Axle Code 02136	426744R91		85303	.....
		453576C91		85303	.....
	DT-405, DBT-405, DCT-405, DCOT-405 & VCOT-405 with Axle Code 02136	293009C91		85308 or 89422	.....
		426744R91		85303	.....
		453576C91		85303	.....
		453577C91		85308 or 89422	.....

Series 417

	DCO-417 & DCOF-417	426744R91		85303	.....
		453576C91		85303	.....

Series 1000 Forward Control Chassis

	1452, 1652 Series	453576C92		85303	.....
		472412C91		83456 or 89447	.....
		586724C91		83456 or 89447	.....
	1452, 1652 Series with International Air Suspension	1675455C1		.....	85003 or 89411
		1690035C1		.....	85003 or 89411
		2018987C1		.....	85003 or 89411
		501553C91		.....	85003 or 89411
	1452, 1652 Series with MOR-RYDE Rear Suspension	548532C1		.....	83103
	1654 LP Series (Low Profile Vehicle)	1660846C91		.....	83101
		1663471C1		83103	.....
		2039565C1		83100	.....
	M1400, M1600 Series	472412C91		83456 or 89447	.....
		501905C91		.....	83301
		586724C91		83456 or 89447	.....

Gabriel Part Numbers that appear in BLUE are GasSLX, adjustable shocks.\ Los números de parte Gabriel imprimidos en AZUL son amortiguadores ajustables GasSLX. \ Les numéros de pièce Gabriel imprimés en BLEU sont des amortisseurs ajustables GasSLX.

Gabriel COMMERCIAL VEHICLE

INTERNATIONAL (NAVISTAR) .. cont'd

Series 2000 - Conventional Truck (Severe Service)

Year Año Année	Model Modelo Modèle	O.E.M. #	Mount	Front Delantero Avant	Rear Trasero Arrière
	2554, 2574, 2654, 2674 Series	472412C91		83456 or 89447	.....
	2554, 2574, 2654, 2674 Series with International Air Suspension	1675455C1		.....	85003 or 89411
		1690035C1		.....	85003 or 89411
		2018987C1		.....	85003 or 89411
		501553C91		.....	85003 or 89411
	2554, 2574, 2654, 2674 Series with International Vari-Rate Rear Suspension	501506C91		.....	83317
	All 2000 Series				
	- With 12000 lb Front Axle	472412C91		83456 or 89447	.....
	- Without 12000 lb Front Axle and with 16000 or 18000 lb Springs	1667520C1		85058 or 89431	.....
	- Without 12000 lb Front Axle and without 16000 or 18000 lb Springs	2015556C1		85316 or 89426	.....

Series 3000 - School Bus Chassis

	3700, 3800 Series	472412C91		83456 or 89447	.....
		501905C91		.....	83301
		501906C91		.....	83317
		586724C91		83456 or 89447	.....
	3700, 3800 Series with International Air Suspension	1675455C1		.....	85003 or 89411
		1690035C1		.....	85003 or 89411
		2018987C1		.....	85003 or 89411
		501553C91		.....	85003 or 89411
	3700, 3800 Series with MOR-RYDE Rear Suspension	548532C1		.....	83103
	3700, 3800 Series with Neway ARD-234 Air Suspension	537524C91		.....	83123 or 89405
		537525C91		.....	83123 or 89405
	3900FC Series	1677707C1		85030 or 89432	.....
		2015557C1		85030 or 89432	.....
		467371C91		83225	83225
	3900FC Series (Genesis - Front Engine)	2200327C1		85332	.....
	3900FC Series (Genesis - Rear Engine)	2039549C1		85333	.....

Series 4000 - Short Conventional Medium Truck & Tractor

	4000 Series with Hendrickson HAS-230 Rear Air Suspension	AMS650420		.....	85013 or 89414
	4600, 4700, 4800, 4900 Series	1663606C91		85027 or 89418	.....
		1667520C1		85058 or 89431	.....
		586724C91		83456 or 89447	.....

Gabriel Part Numbers that appear in BLUE are GasSLX, adjustable shocks.\ Los números de parte Gabriel imprimidos en AZUL son amortiguadores ajustables GasSLX. \ Les numéros de pièce Gabriel imprimés en BLEU sont des amortisseurs ajustables GasSLX.

Gabriel® COMMERCIAL VEHICLE

INTERNATIONAL (NAVISTAR) Series 4000 - Short Conventional Medium Truck & Tractor .. cont'd

Year Año Année	Model Modelo Modèle	O.E.M. #	Mount	Front Delantero Avant	Rear Trasero Arrière
	4600, 4700, 4800, 4900 Series with 10000 lb Front Axle	472412C91		83456 or 89447	.....
	4600, 4700, 4800, 4900 Series with International Air Suspension (Exc. Low Profile)	1675455C1		.....	85003 or 89411
		1690035C1		.....	85003 or 89411
		2018987C1		.....	85003 or 89411
		501553C91		.....	85003 or 89411
	4600LP Series (Low Profile Vehicle)	501906C91		.....	83317
- Jan95	4600LP, 4700LP Series (Low Profile Vehicle) U-Haul	1675496C91		.....	83636
		540395C92		83613	.....
Feb95-	4600LP, 4700LP Series (Low Profile Vehicle) U-Haul	2039565C1		.....	83100
		540395C92		83613	.....
	4800 4x4 with front driving Axle	506911C91		.....	.....
	4900 Series with Dual Doors	2015556C1		85316 or 89426	.....

Series 5000, 5000i - Severe Service Conventional Truck & Tractor

	5070 Series - 6 X 4 - with Neway AD246-10 Air Suspension and 60" Axle Spacing	2029200C91		.....	85030 or 89440
		AMS 600172		.....	85030 or 89440

Series 7000 - Short Conventional Medium Truck & Tractor

	7100 Series	1663606C91		85027 or 89418	.....
		472412C91		83456 or 89447	.....
		586724C91		83456 or 89447	.....
	7100 Series with International Air Suspension	1675455C1		.....	85003 or 89411
		1690035C1		.....	85003 or 89411
		2018987C1		.....	85003 or 89411
		501553C91		.....	85003 or 89411
	7300, 7400, 7500, 7600 Series w/ IAS Suspension w/ 5.3" Ride Height	3544766C1		.....	85930

Series 8000 - Conventional Heavy Duty Tractor

	8100 Series - 6 X 4 & 4 X 2 Models with International Air Suspension for Lo-Profile and Carhauler	1660846C1		.....	83101
	8100 Series Car Hauler	1664524C1		.....	85935
		472412C91		83456 or 89447	.....
	8100, 8200 & 8300 Series - 6 X 4 Models with International Air Suspension (Except Lo-Profile and Carhauler)	2018987C1		.....	85003 or 89411
	8100, 8200, 8300 Series	3000070C91		83456 or 89447	.....
		501906C91		.....	83317
	8100, 8200, 8300 Series - 6 X 4 - with Neway AD246-10 Air Suspension and 60" Axle Spacing	2029200C91		.....	85030 or 89440
		AMS 600172		.....	85030 or 89440

Gabriel Part Numbers that appear in BLUE are GasSLX, adjustable shocks.\ Los números de parte Gabriel imprimidos en AZUL son amortiguadores ajustables GasSLX. \ Les numéros de pièce Gabriel imprimés en BLEU sont des amortisseurs ajustables GasSLX.

Gabriel® COMMERCIAL VEHICLE

Year Año Année	Model Modelo Modèle	O.E.M. #	Mount	Front Delantero Avant	Rear Trasero Arrière

INTERNATIONAL (NAVISTAR) Series 8000 - Conventional Heavy Duty Tractor .. cont'd

	8100, 8200, 8300 Series - with Hendrickson HA-460 Air Suspension with 55" & 60" axle spacing and 40000 & 46000 lb capacity	AMS 600102		.....	85005 or 89430
	8100, 8200, 8300 Series with 12000 - 14000 lb Suspension	1664788C2		85316 or 89426	.....
		2015556C1		85316 or 89426	.....
	8100, 8200, 8300 Series with 15000 - 18000 lb Suspension	1667520C1		85058 or 89431	.....
	8100, 8200, 8300 Series with Hendrickson HA-230 Rear Air Suspension	AMS 600102		.....	85005 or 89430
	8100, 8200, 8300 Series with International Air Suspension	1675455C1		.....	85003 or 89411
		1690035C1		.....	85003 or 89411
		501553C91		.....	85003 or 89411

Series 9100, 9100i - Tractor & Straight Truck

	9100 Series - 4 X 2 with International Air Suspension	2018987C1		.....	85003 or 89411
	9100 Series - 6 X 4 - with Neway AD246-10 Air Suspension and 60" Axle Spacing	2029200C91		.....	85030 or 89440
		AMS 600172		.....	85030 or 89440
	9100 Series - 6 X 4 (Low Profile) Models with International Air Suspension	1660846C91		.....	83101
	9100 Series - 6 X 4 with International Air Suspension	2018987C1		.....	85003 or 89411
	9100 Series - with Hendrickson HA-460 Series Air Suspension	AMS 600102		.....	85005 or 89430
	9100 Series with 12000 - 14000 lb Suspension	1664788C2		85316 or 89426	.....
		2015556C1		85316 or 89426	.....
		2032533C1		85316 or 89426	.....

Series 9100i, 9200i, 9400i Conventional Heavy Duty Tractor

	9100i, 9200i, 9400i w/ IAS Suspension w/ 9.25" or 9.5" Ride Height	3573265C1		.....	85931

Series 9200, 9200i - Tractor & Straight Truck

- Aug12 /94	9200 Series - 4 X 2 with International Air Suspension	1675496C91		.....	83636
Aug12 /94 -	9200 Series - 4 X 2 with International Air Suspension	2018987C1		.....	85003 or 89411
	9200 Series - 6 X 4 - with Neway AD246-10 Air Suspension and 60" Axle Spacing	2029200C91		.....	85030 or 89440
		AMS 600172		.....	85030 or 89440
	9200 Series - 6 X 4 (Low Profile) Models with International Air Suspension	1660846C91		.....	83101
	9200 Series - 6 X 4 with International Air Suspension	2018987C1		.....	85003 or 89411
	9200 Series with 12000 - 18000lb Suspension	1664788C2		85316 or 89426	.....
		2015556C1		85316 or 89426	.....
		2032533C1		85316 or 89426	.....
	9200 Series with Hendrickson HA-460 Series Air Suspension	AMS 600102		.....	85005 or 89430

Gabriel Part Numbers that appear in BLUE are GasSLX, adjustable shocks.\ Los números de parte Gabriel imprimidos en AZUL son amortiguadores ajustables GasSLX. \ Les numéros de pièce Gabriel imprimés en BLEU sont des amortisseurs ajustables GasSLX.

Gabriel® COMMERCIAL VEHICLE

Year Año Année	Model Modelo Modèle	O.E.M. #	Mount	Front Delantero Avant	Rear Trasero Arrière

INTERNATIONAL (NAVISTAR) Series 8000 - Conventional Heavy Duty Tractor .. cont'd

	9200 Series with International Air Suspension	1675455C1		.....	85003 or 89411
		1690035C1		.....	85003 or 89411
		501553C91		.....	85003 or 89411

Series 9300, 9300i, 9400 & 9400i Long Hood Conventional Truck & Tractor

	9300, 9400 Series - 6 X 4 with International Air Suspension Exc. Lo-Profile	2018987C1		.....	85003 or 89411
	9300, 9400 Series - 6 X 4 with International Air Suspension For Lo-Profile	1660846C91		.....	83101
	9300, 9400 Series - 6 X 4 with Neway AD246-10 Air Suspension and 60" Axle Spacing	2029200C91		.....	85030 or 89440
		AMS 600172		.....	85030 or 89440
	9300, 9400 Series (SBA Model) with 16000 lb - 18000 lb Suspension	1664149C1		85029	.....
	9300, 9400 Series (SFA Model) with 16000 lb - 18000 lb Suspension	507202C1		85030 or 89440	.....
	9300, 9400 Series with 10800 lb - 14600 lb Suspension	503610C2		83207 or 89407	.....
	9300, 9400 Series with 12000 - 14000 lb Suspension	1664788C2		85316 or 89426	.....
		2015556C1		85316 or 89426	.....
		2032533C1		85316 or 89426	.....
	9300, 9400 Series with 16000 - 18000 lb Suspension	1667520C1		85058 or 89431	.....
	9300, 9400 Series with Hendrickson HA-460 Series Air Suspension	AMS 600102		.....	85005 or 89430
	9300, 9400 Series with Hendrickson RS/RTE-380 Rear Air Suspension	503610C2		.....	83207 or 89407
	9300, 9400 Series with Hendrickson RS-460 Rear Air Suspension	2015557C1		.....	85030 or 89432
	9300, 9400 Series with International Air Suspension	1675455C1		.....	85003 or 89411
		1690035C1		.....	85003 or 89411
		501553C91		.....	85003 or 89411
	9300, 9400 Series with Neway ARD-125/244 Air Suspension	790335C91		.....	83209 or 89414

Series 9600 & 9700 Premium Cabover Tractor

	9600, 9700 Series	503610C2		83207 or 89407	.....
		507202C1		85030 or 89440	.....
	9600, 9700 Series Except Low Profile	1664788C2		85316 or 89426	.....
		2015556C1		85316 or 89426	.....
	9600, 9700 Series for Low Profile	503610C2		83207 or 89407	.....
	9600, 9700 Series with 16000 - 18000 lb Suspension	1667520C1		85058 or 89431	.....
	9600, 9700 Series with Hendrickson HA-460 Air Suspension with 55" or 60" axle spacing and 40000 or 46000 lb capacity	AMS 600102		.....	85005 or 89430

Gabriel Part Numbers that appear in BLUE are GasSLX, adjustable shocks.\ Los números de parte Gabriel imprimidos en AZUL son amortiguadores ajustables GasSLX. \ Les numéros de pièce Gabriel imprimés en BLEU sont des amortisseurs ajustables GasSLX.

Gabriel COMMERCIAL VEHICLE

Year Año Année	Model Modelo Modèle	O.E.M. #	Mount	Front Delantero Avant	Rear Trasero Arrière

INTERNATIONAL (NAVISTAR) Series 9600 & 9700 Premium Cabover Tractor .. cont'd

	9600, 9700 Series with International Air Suspension	1675455C1		.....	85003 or 89411
		1690035C1		.....	85003 or 89411
		2018987C1		.....	85003 or 89411
		501553C91		.....	85003 or 89411
	9600, 9700 Series with International STL Spring Suspension	503550C1		.....	83207 or 89407
	9600, 9700 Series with Neway ARD-125/244 Air Suspension	790335C91		.....	83209 or 89414
	9600, 9700 Series with Neway ARD-234 Air Suspension	537524C91		.....	83123 or 89405

Series 9800 - Premium Cabover Tractor

	9800 Series - 6 X 4 Models with International Air Suspension	2018987C1		.....	85003 or 89411
	9800 Series - 6 X 4 Models with Neway AD246-10 Air Suspension and 60" Axle Spacing	2029200C91		.....	85030 or 89440
		AMS 600172		.....	85030 or 89440
	9800 Series - with Hendrickson HA-460 Air Suspension with 55" & 60" axle spacing and 40000 & 46000 lb capacity	AMS 600102		.....	85005 or 89430
	9800 Series - with Hendrickson HAS-402-60 Air Suspension	AMS 650420		.....	85013 or 89414
	9800 Series - with Set Back axle	2015556C1		85316 or 89426	.....
	9800 Series - with Set Forward axle	503610C2		83207 or 89407	.....

Series 9900, 9900i Long Hood Conventional Truck

	9900 Series - 6 X 4 with International Air Suspension Exc. Lo-Profile	2018987C1		.....	85003 or 89411
	9900 Series - 6 X 4 with International Air Suspension For Lo-Profile	1660846C91		.....	83101
	9900 Series - 6 X 4 with Neway AD246-10 Air Suspension and 60" Axle Spacing	2029200C91		.....	85030 or 89440
		AMS 600172		.....	85030 or 89440
	9900 Series (SBA Model) with 16000 lb - 18000 lb Suspension	1664149C1		85029	.....
	9900 Series (SFA Model) with 16000 lb - 18000 lb Suspension	507202C1		85030 or 89440	.....
	9900 Series with 10800 lb - 14600 lb Suspension	503610C2		83207 or 89407	.....
	9900 Series with 12000 - 14000 lb Suspension	1664788C2		85316 or 89426	.....
		2015556C1		85316 or 89426	.....
		2032533C1		85316 or 89426	.....
	9900 Series with 16000 - 18000 lb Suspension	1667520C1		85058 or 89431	.....
	9900 Series with Hendrickson HA-460 Series Air Suspension	AMS 600102		.....	85005 or 89430
	9900 Series with Hendrickson RS/RTE-380 Rear Air Suspension	503610C2		.....	83207 or 89407
	9900 Series with Hendrickson RS-460 Rear Air Suspension	2015557C1		.....	85030 or 89432

Gabriel Part Numbers that appear in BLUE are GasSLX, adjustable shocks.\ Los números de parte Gabriel imprimidos en AZUL son amortiguadores ajustables GasSLX. \ Les numéros de pièce Gabriel imprimés en BLEU sont des amortisseurs ajustables GasSLX.

Gabriel® COMMERCIAL VEHICLE

INTERNATIONAL (NAVISTAR) Series 9900, 9900i Long Hood Conventional Truck .. cont'd

Year Año Année	Model Modelo Modèle	O.E.M. #	Mount	Front Delantero Avant	Rear Trasero Arrière
	9900 Series with International Air Suspension	1675455C1		.....	85003 or 89411
		1690035C1		.....	85003 or 89411
		501553C91		.....	85003 or 89411
	9900 Series with Neway ARD-125/244 Air Suspension	790335C91		.....	83209 or 89414

Transtar - Conventional

	4170, F-4170, 4200, F-4200, 4300 & F-4300	426744R91		85303	.....
		426744R92		85303	.....
		453576C91		85303	.....
		453576C92		85303	.....
		477132C1		85303	.....
	4170, F-4170, 4200, F-4200, 4300 & F-4300 with Air Ride Suspension	350425C1		.....	85300 or 89419
		462557C91		.....	85300 or 89419
	D-400, DF-400, DC-400, DCF-400 & DCF-400M - Exc. Axle Code 02136	426744R91		85303	.....
		426744R92		85303	.....
		453576C91		85303	.....
	D-400, DF-400, DC-400, DCF-400 & DCF-400M with Axle Code 02136	293009C91		85308 or 89422	.....
		453577C91		85308 or 89422	.....

Unistar

	CO7044A	426744R91		85303	85303
		426744R92		85303	85303
		453576C91		85303	85303
	Additional O.E.M. Interchanges	56101-Z5008		83114	
		596329C1		85014	
	Models with O.E.M. Number	3571711C1		85316 or 89426	.....
	Additional O.E.M. Interchanges	1664524C1		85935	
		2012769C2		83005	
		2023684C1		83015	
		2023685C1		83015	
		2025790C1		83013	
		3533357C1		85928	
		3541456C1		85929	
		3544766C1		85930	
		3544768C1		85926	
		3549099C2		85923	
		3549100C1		85926	
		3553628C1		85927	
		3553628C2		85927	
		3558089C1		85925	
		3558089C2		85925	
		3558989C1		85925	
		3558989C2		85925	
		3571713C1		85333	
		3573265C1		85931	

Gabriel Part Numbers that appear in BLUE are GasSLX, adjustable shocks.\ Los números de parte Gabriel imprimidos en AZUL son amortiguadores ajustables GasSLX. \ Les numéros de pièce Gabriel imprimés en BLEU sont des amortisseurs ajustables GasSLX.

Gabriel® COMMERCIAL VEHICLE

Year Año Année	Model Modelo Modèle	O.E.M. #	Mount	Front Delantero Avant	Rear Trasero Arrière
	INTERNATIONAL (NAVISTAR) .. cont'd				
	Additional O.E.M. Interchanges	3578858C1		85926	
		3581106C1		85924	
		3581107C1		85924	
		3581107C2		85924	
		3581109C1		85924	
		3581109C3		85924	
		3584535C1		85924	
		3586883C1		85931	
	ISUZU				
Aug 87 - Apr93	EVR Short Chassis	1-51630-215-0		.....	.....
Aug 87 - Jun92	EVR Short Chassis	1-51630-180-3		.....	.....
July 92-	EVR Short Chassis, FVR Short & Middle Chassis	1-51630-304-0		.....	.....
1995-	FRR/W5 Series (All)	1-51630-219-1		83114	.....
1986-92	FSR Series	1-51630-168-1		G60107	.....
		1-51630-217-1		83114	.....
Oct 89 - 94	FSR/W6 Series	1-51630-167-0		.....	.....
Aug 87 - June 92	FVR Short & Middle Chassis	1-51630-160-0		.....	.....
1985	KS22 Series (All)	8-97083-027-0		G60177	.....
		9-51630-666-0		.....	85012 or 89413
		9-51630-666-2		.....	85012 or 89413
1986-95	NPR Series (NPC & NPN)	8-94454-647-1		G60177	.....
		8-94454-986-0		G60177	.....
		8-94454-987-0		G60177	.....
		8-97083-029-0		G60177	.....
		9-51630-666-0		.....	85012 or 89413
		9-51630-666-2		.....	85012 or 89413
1989-92	NPR Series Flatlow	9-51630-666-0		.....	85012 or 89413
		9-51630-666-2		.....	85012 or 89413
1989-90	NPR Series Flatlow	9-51630-647-1		G60177	.....
86-94	NPR/W4 Series (All)	9-51630-666-2		.....	85012 or 89413
Jul95-	NPR/W4 Series Single Cab with Short Chassis (NPC7SC), with Middle Chassis (NPC7SF), with Long Chassis (NPC7SK)	8-97119-729-0		.....	.....
Sept 94 - June 95	NPR/W4 Series Single Cab with Short Chassis (NPC7SC), with Middle Chassis (NPC7SF), with Long Chassis (NPC7SK) all with 13000 lb suspension	8-97083-029-0		G60177	.....
Sept 94 - June 95	NPR/W4 Series Single Cab with Short Chassis (NPC7SC), with Middle Chassis (NPC7SF), with Long Chassis (NPC7SK) EXC. 13000 lb suspension	8-97083-028-0		.....	.....
1986-Aug92	NPR/W4 Series with 11000 lb Suspension	8-97083-027-0		G60177	.....
Sept88 -Aug92	NPR/W4 Series with 13000 lb Suspension	8-94454-987-0		G60177	.....
1987-Aug88	NPR/W4 Series with 13000 lb Suspension	8-97083-029-0		G60177	.....
Sept 92 -	NPR/W4 Series with 13000 lb Suspension	8-97083-029-0		G60177	.....

Gabriel Part Numbers that appear in BLUE are GasSLX, adjustable shocks.\ Los números de parte Gabriel imprimidos en AZUL son amortiguadores ajustables GasSLX. \
Les numéros de pièce Gabriel imprimés en BLEU sont des amortisseurs ajustables GasSLX.

Gabriel® COMMERCIAL VEHICLE

Year Año Année	Model Modelo Modèle	O.E.M. #	Mount	Front Delantero Avant	Rear Trasero Arrière
ISUZU .. cont'd					
1988- 99	NRR/W5 Series (All)	1-51630-217-0		83114	.....
		1-51630-217-1		83114	.....
		1-51630-219-1		83114	.....
	Models with O.E.M. Number	94033786		83114	.....
JAY MADSEN					
	Additional O.E.M. Interchanges	3166657		85700	
		3192333		85700	
JIFFLOX					
	Truck Dolly	CP5222		85315	.....
KENWORTH					
	All with AG 230 Suspension	671656		.....	.....
2005 -	All with AG 460 Suspension	671963		.....	85937
2005 -	All with Air Glide 400 Suspension	671962		.....	85936 or 89456
C500, C500B, C500K, C540 & C550					
	All with Air Glide 200 with 40,000 lb Suspension with 8 air bags, 4 units required	665903		.....	85900
		665944		.....	85900
		70701		.....	85900
	All with Air Glide 200 with 46,000 lb Suspension with 8 air bags, 4 units required	665906		.....	85902
		665945		.....	85902
2001 & Up	Models with AirGlide 380 Suspension (38000 lb)	C71-1002		.....	85067 or 89451
	Models with Multiple Leaf Springs on Front Axle	K374-14		83312 or 89409	.....
		K374-3		83312 or 89409	.....
		K374-33		83312 or 89409	.....
		K374-5		83312 or 89409	.....
	Models with Taper Leaf Springs on Front Axle	K374-11		85001 or 89410	.....
		K374-16		85001 or 89410	.....
		K374-26		85001 or 89410	.....
		K374-27		85001 or 89410	.....
K100, K100E, K125					
	All with Air Glide 100 Suspension with 8 air bags, 4 units required	K374-29		.....	85310 or 89423
		K374-32		.....	85310 or 89423
		K374-7		.....	85310 or 89423
		K374-9		.....	85310 or 89423
	All with Air Glide 200 with 40,000 lb Suspension with 8 air bags, 4 units required	665903		.....	85900
		665944		.....	85900
		70701		.....	85900

Gabriel Part Numbers that appear in BLUE are GasSLX, adjustable shocks.\ Los números de parte Gabriel imprimidos en AZUL son amortiguadores ajustables GasSLX. \ Les numéros de pièce Gabriel imprimés en BLEU sont des amortisseurs ajustables GasSLX.

Gabriel® COMMERCIAL VEHICLE

Year Año Année	Model Modelo Modèle	O.E.M. #	Mount	Front Delantero Avant	Rear Trasero Arrière
	KENWORTH K100, K100E, K125 .. cont'd				
	All with Air Glide 200 with 46,000 lb Suspension with 8 air bags, 4 units required	665906		.....	85902
		665945		.....	85902
	Models with Dual Steering Front Axle and Torsion Bar Bogey Rear Suspension	K374-28		.....	85314 or 89425
		K374-4		.....	85314 or 89425
	Models with Multiple Leaf Springs on Front Axle	K374-14		83312 or 89409	.....
		K374-3		83312 or 89409	.....
		K374-33		83312 or 89409	.....
		K374-5		83312 or 89409	.....
	Models with Set Back Front Axle	665331		83353	.....
		K374-13		83353	.....
		K374-13-1		83353	.....
	Models with Taper Leaf Springs on Front Axle	K374-11		85001 or 89410	.....
		K374-16		85001 or 89410	.....
		K374-26		85001 or 89410	.....
		K374-27		85001 or 89410	.....
	K300, T300				
	All with Air Glide 100 Suspension with 8 air bags, 4 units required	K374-29		.....	85310 or 89423
		K374-32		.....	85310 or 89423
		K374-7		.....	85310 or 89423
		K374-9		.....	85310 or 89423
	All with Air Glide 200 with 40,000 lb Suspension with 8 air bags, 4 units required	665903		.....	85900
		665944		.....	85900
		70701		.....	85900
	All with Air Glide 200 with 46,000 lb Suspension with 8 air bags, 4 units required	665906		.....	85902
		665945		.....	85902
	K300 COE Medium Duty	665565		85007 or 89412	.....
	Models with Hendrickson Rear Air Suspension	47902-19		.....	83123 or 89405
	Models with Multiple Leaf Springs on Front Axle	K374-14		83312 or 89409	.....
		K374-3		83312 or 89409	.....
		K374-33		83312 or 89409	.....
		K374-5		83312 or 89409	.....
	Models with Reyco 102 or 79KB Suspension (Drive Axle)	16725-01		.....	83221
	Models with Reyco 1209 or 1212 Suspension (Steer Axle)	19495-01		85030 or 89440	.....

Gabriel Part Numbers that appear in BLUE are GasSLX, adjustable shocks.\ Los números de parte Gabriel imprimidos en AZUL son amortiguadores ajustables GasSLX. \
Les numéros de pièce Gabriel imprimés en BLEU sont des amortisseurs ajustables GasSLX.

Gabriel® COMMERCIAL VEHICLE

Year Año Année	Model Modelo Modèle	O.E.M. #	Mount	Front Delantero Avant	Rear Trasero Arrière
KENWORTH K300, T300 .. cont'd					
	Models with Taper Leaf Springs on Front Axle	K374-11		85001 or 89410	.....
		K374-16		85001 or 89410	.....
		K374-26		85001 or 89410	.....
		K374-27		85001 or 89410	.....
	Models with Woodhead Shock (Stamping Number ACHB 966)	ACHB966		.....	83136
	T300 Conventional Medium Duty	665617		85031	.....
Specialty / Vocational O.E.M. Part Numbers					
	Heavy Duty Vocational Models / Cement Mixers	665753		.....	.....
T400, T400B, T450B					
	All with Air Glide 100 Suspension with 8 air bags, 4 units required	K374-29		.....	85310 or 89423
		K374-32		.....	85310 or 89423
		K374-7		.....	85310 or 89423
		K374-9		.....	85310 or 89423
		K374-C7		.....	85310 or 89423
	All with Air Glide 200 with 40,000 lb Suspension with 8 air bags, 4 units required	665903		.....	85900
		665944		.....	85900
		70701		.....	85900
	All with Air Glide 200 with 46,000 lb Suspension with 8 air bags, 4 units required	665906		.....	85902
		665945		.....	85902
	Models with Multiple Leaf Springs on Front Axle	K374-14		83312 or 89409	.....
		K374-3		83312 or 89409	.....
		K374-33		83312 or 89409	.....
		K374-5		83312 or 89409	.....
	Models with Taper Leaf Springs on Front Axle	K374-11		85001 or 89410	.....
		K374-16		85001 or 89410	.....
		K374-26		85001 or 89410	.....
		K374-27		85001 or 89410	.....
	Models with Torsion Bar Bogey (2 rear axles) and KW Air Ride Suspension (with 4 air bags)	K374-28		.....	85314 or 89425
		K374-4		.....	85314 or 89425

Gabriel Part Numbers that appear in BLUE are GasSLX, adjustable shocks.\ Los números de parte Gabriel imprimidos en AZUL son amortiguadores ajustables GasSLX. \ Les numéros de pièce Gabriel imprimés en BLEU sont des amortisseurs ajustables GasSLX.

Gabriel COMMERCIAL VEHICLE

Year Año Année	Model Modelo Modèle	O.E.M. #	Mount	Front Delantero Avant	Rear Trasero Arrière

KENWORTH .. cont'd

T600, T600A, T600B, T602

	All with Air Glide 100 Suspension with 8 air bags, 4 units required	K374-29		.....	85310 or 89423
		K374-32		.....	85310 or 89423
		K374-7		.....	85310 or 89423
		K374-9		.....	85310 or 89423
		K374-C7		.....	85310 or 89423
	All with Air Glide 200 with 40,000 lb Suspension with 8 air bags, 4 units required	665903		.....	85900
		665944		.....	85900
		70701		.....	85900
	All with Air Glide 200 with 46,000 lb Suspension with 8 air bags, 4 units required	665906		.....	85902
		665945		.....	85902
	Models with Hendrickson Rear Air Suspension	47902-19		.....	83123 or 89405
		47902-24		.....	83121
	Models with Multiple Leaf Springs on Front Axle	K374-14		83312 or 89409	.....
		K374-3		83312 or 89409	.....
		K374-33		83312 or 89409	.....
		K374-5		83312 or 89409	.....
	Models with Reyco 102 or 79KB Suspension (Drive Axle)	16725-01		.....	83221
	Models with Reyco 1209 or 1212 Suspension (Steer Axle)	19495-01		85030 or 89440	.....
	Models with Taper Leaf Springs on Front Axle	K374-11		85001 or 89410	.....
		K374-16		85001 or 89410	.....
		K374-26		85001 or 89410	.....
		K374-27		85001 or 89410	.....

T800, T800B, T800B(8x4), T800SH, T800H, T800W

	All with Air Glide 100 Suspension with 8 air bags, 4 units required	K374-29		.....	85310 or 89423
		K374-32		.....	85310 or 89423
		K374-7		.....	85310 or 89423
		K374-9		.....	85310 or 89423
		K374-C7		.....	85310 or 89423
	All with Air Glide 200 with 40,000 lb Suspension with 8 air bags, 4 units required	665903		.....	85900
		665944		.....	85900
		70701		.....	85900
	All with Air Glide 200 with 46,000 lb Suspension with 8 air bags, 4 units required	665906		.....	85902
		665945		.....	85902

Gabriel Part Numbers that appear in BLUE are GasSLX, adjustable shocks.\ Los números de parte Gabriel imprimidos en AZUL son amortiguadores ajustables GasSLX. \
Les numéros de pièce Gabriel imprimés en BLEU sont des amortisseurs ajustables GasSLX.

Gabriel® COMMERCIAL VEHICLE

Year Año Année	Model Modelo Modèle	O.E.M. #	Mount	Front Delantero Avant	Rear Trasero Arrière
KENWORTH T800, T800B, T800B(8x4), T800SH, T800H, T800W .. cont'd					
	Models with Hendrickson Rear Air Suspension	47902-19		.....	83123 or 89405
		47902-24		.....	83121
	Models with Multiple Leaf Springs on Front Axle	K374-14		83312 or 89409	.....
		K374-3		83312 or 89409	.....
		K374-33		83312 or 89409	.....
		K374-5		83312 or 89409	.....
	Models with Neway Rear Air Suspension	90044089		.....	83124 or 89407
	Models with Neway Rear Air Suspension (AD123-, AD246-)	90045132		.....	85909
	Models with Reyco 102 or 79KB Suspension (Drive Axle)	16725-01		.....	83221
	Models with Reyco 1209 or 1212 Suspension (Steer Axle)	19495-01		85030 or 89440	.....
	Models with Taper Leaf Springs on Front Axle	K374-11		85001 or 89410	.....
		K374-16		85001 or 89410	.....
		K374-26		85001 or 89410	.....
		K374-27		85001 or 89410	.....
	Models with Torsion Bar Bogey (2 rear axles) and KW Air Ride Suspension (with 4 air bags)	K374-28		.....	85314 or 89425
		K374-4		.....	85314 or 89425
T2000					
	All with Air Glide 100 Suspension with 8 air bags, 4 units required	K374-29		.....	85310 or 89423
		K374-32		.....	85310 or 89423
		K374-7		.....	85310 or 89423
		K374-9		.....	85310 or 89423
	All with Air Glide 200 with 40,000 lb Suspension with 8 air bags, 4 units required	665903		.....	85900
		665944		.....	85900
		70701		.....	85900
	All with Air Glide 200 with 46,000 lb Suspension with 8 air bags, 4 units required	665906		.....	85902
		665945		.....	85902
	Models with Multiple Leaf Springs on Front Axle	K374-14		83312 or 89409	.....
		K374-3		83312 or 89409	.....
		K374-33		83312 or 89409	.....
		K374-5		83312 or 89409	.....

Gabriel Part Numbers that appear in BLUE are GasSLX, adjustable shocks.\ Los números de parte Gabriel imprimidos en AZUL son amortiguadores ajustables GasSLX. \ Les numéros de pièce Gabriel imprimés en BLEU sont des amortisseurs ajustables GasSLX.

Gabriel COMMERCIAL VEHICLE

Year Año Année	Model Modelo Modèle	O.E.M. #	Mount	Front Delantero Avant	Rear Trasero Arrière
	KENWORTH T2000 .. cont'd				
	Models with Taper Leaf Springs on Front Axle	K374-11		85001 or 89410	.....
		K374-16		85001 or 89410	.....
		K374-26		85001 or 89410	.....
		K374-27		85001 or 89410	.....
	W900, W900B, W900L, W900S				
	All with Air Glide 100 Suspension with 8 air bags, 4 units required	K374-29		.....	85310 or 89423
		K374-32		.....	85310 or 89423
		K374-7		.....	85310 or 89423
		K374-9		.....	85310 or 89423
		K374-C7		.....	85310 or 89423
	All with Air Glide 200 with 40,000 lb Suspension with 8 air bags, 4 units required	665903		.....	85900
		665944		.....	85900
		70701		.....	85900
	All with Air Glide 200 with 46,000 lb Suspension with 8 air bags, 4 units required	665906		.....	85902
		665945		.....	85902
	Models with Hendrickson Rear Air Suspension	47902-19		.....	83123 or 89405
		47902-24		.....	83121
	Models with Multiple Leaf Springs on Front Axle	K374-14		83312 or 89409	.....
		K374-3		83312 or 89409	.....
		K374-33		83312 or 89409	.....
		K374-5		83312 or 89409	.....
	Models with Reyco 102 or 79KB Suspension (Drive Axle)	16725-01		.....	83221
	Models with Reyco 1209 or 1212 Suspension (Steer Axle)	19495-01		85030 or 89440	.....
	Models with Taper Leaf Springs on Front Axle	K374-11		85001 or 89410	.....
		K374-16		85001 or 89410	.....
		K374-26		85001 or 89410	.....
		K374-27		85001 or 89410	.....
	Models with Torsion Bar Bogey (2 rear axles) and KW Air Ride Suspension (with 4 air bags)	K374-28		.....	85314 or 89425
		K374-4		.....	85314 or 89425
	Models with O.E.M. number	665858		85070	.....
		K374-15		83353	.....
		K374-C31		83312 or 89409	.....
	Additional O.E.M. Interchanges	665092		83312 or 89409	
		665118		83312 or 89409	
		K374-3-1		83312 or 89409	

Gabriel Part Numbers that appear in BLUE are GasSLX, adjustable shocks.\ Los números de parte Gabriel imprimidos en AZUL son amortiguadores ajustables GasSLX. \
Les numéros de pièce Gabriel imprimés en BLEU sont des amortisseurs ajustables GasSLX.

Gabriel® COMMERCIAL VEHICLE

Year Año Année	Model Modelo Modèle	O.E.M. #	Mount	Front Delantero Avant	Rear Trasero Arrière
KWK-LOC (JIFFLOX)					
	Truck Dolly	CP-5222		85315	.....
LODAL, INC.					
	Refuse Truck	9960257		83122 or 89406	.....
M.A.N. BUS					
	Americana Bus with O.E.M. Numbers	25-1700-106-654		.....	85708
		81-43701-6543		.....	85708
		81-43701-6572		85708	.....
		81-43701-6573		85722	.....
	Articulating Bus - Drive Axle	81-43701-6537		.....	85709
	Articulating Bus - Front Axle	81-43701-6538		85708	.....
	Articulating Bus - Trailing Axle	81-43701-6539		.....	85708
	Models with O.E.M. Number	134		.....	85709
		81-43701-6609		.....	85709
		9020M-1042		.....	85709
MAC TRAILER MFG., INC.					
	Identification of the trailer suspension is necessary to determine what section of the catalog to refer to. Some possible options can be Chalmers, Hendrickson, Neway, Ridewell, Reyco.				
MACK					
	CH Series				
	CH Series with Hendrickson HA Series Air Suspension	14QK-410M2		.....	83137
		14QK-410M3		.....	83125
	CH600 Series with 12000 lb Taperleaf Spring	14QK-392AM		85005 or 89430	.....
		14QK-392BM		85005 or 89430	.....
		14QK-392BM3		85005 or 89430	.....
		14QK-396M		.....	85005 or 89430
	CH600 Series with AL Suspension	14QK-393M		.....	85010
	CH600 Series with ALV Hendrickson Suspension	14QK-413M5		.....	83138
		14QK-413M6		.....	83111
	CH600 Series with HAS400 MACK Air Suspension	14QK-410M		.....	83125
		47902-25		.....	83125
	CH600 Series with Hendrickson AL-405 Rear Suspension	14QK413M7		83111	.....
	CH600 Series with Hendrickson HN-2 Series Suspension	14QK-415M		.....	83112
	CH600 Series with Hendrickson Rear Air	14QK-393AM		.....	83123 or 89405
		47902-9		.....	83123 or 89405
	CH600 Series with Neway AD Air Suspension Shock w/ extend length of 24.30”	14QK-414M2		.....	85909
	CH600 Series with ST34 Suspension	14QK-2113M		85001 or 89410	.....
	CH600 Series with Steering Axle with Parabolic Taperleaf Spring	14QK-396		85005 or 89430	.....

Gabriel Part Numbers that appear in BLUE are GasSLX, adjustable shocks.\ Los números de parte Gabriel imprimidos en AZUL son amortiguadores ajustables GasSLX. \ Les numéros de pièce Gabriel imprimés en BLEU sont des amortisseurs ajustables GasSLX.

Gabriel® COMMERCIAL VEHICLE

Year Año Année	Model Modelo Modèle	O.E.M. #	Mount	Front Delantero Avant	Rear Trasero Arrière

MACK CH Series .. cont'd

	Models with O.E.M. Number	14QK-2113M		.....	85001 or 89410
		14QK-2113P6		.....	85007 or 89412
	Additional O.E.M. Interchanges	14QK-3101M		.....	.....
		14QK-421M		85014	.....

CL Series

	CL600, CL700 Series with HAS400 MACK Air Suspension	14QK-410M		.....	83125
		47902-25		.....	83125
	CL600, CL700 Series with Hendrickson Rear Air Susp	14QK-393AM		.....	83123 or 89405
		47902-9		.....	83123 or 89405
	CL600, CL700 Series with Multileaf Spring Suspension	14QK-392AM2		83123 or 89405	.....
		14QK-392BM2		85321	.....
	CL600, CL700 Series with ST34 Suspension	14QK-2113M		85001 or 89410	.....
	CL600, CL700 Series with Steering Axle & Taperleaf Spring	14QK-392AM		85005 or 89430	.....
		14QK-392BM		85005 or 89430	.....
	CL600/CL700 Series with Neway AD Air Suspension Shock w/ extend length of 24.30"	14QK-414M2		.....	85909
	CL600/CL700 Series with ALV Hendrickson Suspension	14QK-413M5		.....	83138
		14QK-413M6		.....	83111
	CL600/CL700 Series with Hendrickson HA Series Air Suspension	14QK-410M2		.....	83137
		14QK-410M3		.....	83125
	CL600/CL700 Series with Hendrickson HN-2 Series Suspension	14QK-415M		.....	83112

CS, MS - Mid - Liner Series

	CS Series Mid-Liner with O.E.M Number	4103-5000447861		83105	.....
		4103-5000546892		83105	.....
		V10234121		83105	.....
		V10242320		83105	.....
	MS200, MS300 Series Mid-Liner	V10234121		83105	.....

CX Series - Vision

	CX Vision Series w/ Hendrickson Air Suspension	14QK-431M		.....	85061 or 89450
	CX Vision Series w/ Hendrickson HA Series Air Suspension	14QK-410M2		.....	83137
		14QK-410M3		.....	83125
	CX Vision Series w/ Hendrickson HN-2 Series Suspension	14QK-415M		.....	83112
	CX Vision Series w/ Neway AD Air Suspension Shock w/ extend length of 24.30"	14QK-414M2		.....	85909
	CX Vision Series w/ Parabolic Spring	14QK-431M		.....	85061 or 89450
	CX Vison Series w/ ALV Hendrickson Suspension	14QK-413M5		.....	83138
		14QK-413M6		.....	83111
	Models with 12000 lb Front Taperleaf Suspension	14QK-392BM3		85005 or 89430	.....

Gabriel Part Numbers that appear in BLUE are GasSLX, adjustable shocks.\ Los números de parte Gabriel imprimidos en AZUL son amortiguadores ajustables GasSLX. \
Les numéros de pièce Gabriel imprimés en BLEU sont des amortisseurs ajustables GasSLX.

Gabriel® COMMERCIAL VEHICLE

MACK CX Series .. cont'd

Year Año Année	Model Modelo Modèle	O.E.M. #	Mount	Front Delantero Avant	Rear Trasero Arrière
	Models with HAS400 MACK Air Suspension	14QK-410M		.....	83125
		47902-25		.....	83125
	Models with Hendrickson Air Suspension (Stamping No. 57241-4)	14QK-413M4		.....	83110
	Models with O.E.M. Number	20513881		85061 or 89450	.....

DM Series

		14QK-2100-P8		83242	.....

F Series

	F Models with Standard Suspension	.....		.....	85305
	F Series - Eastern	.....		83221	.....
	F Series (exc. Eastern)	.....		83207 or 89407	.....
		.....		.....	83215
	Fire Truck	.....		85302 or 89420	85302 or 89420
	FL Series - Western	14QK-143		83207 or 89407	.....
		14QK-2100D-P4		83207 or 89407	.....

MH Series

	MH Series - 4" Wide Springs	14QK-373		83215	.....
		14QK-378M		83215	.....
	MH Series with Camelback Rear Suspension (SS34 & 38)	14QK-2107P1		.....	83215
		14QK-2107P2		.....	83215
	MH Series with Neway ARD-234 Air Suspension	14QK-375M		.....	83123 or 89405
	MH Series with O.E.M. Number	14QK-2113P5		85001 or 89410	.....
		14QK-2133M		85001 or 89410	.....
		14QK-2133M2		85001 or 89410	.....
		14QK-377M		83215	.....
		14QK-392AM		85005 or 89430	85005 or 89430
	MH Series with Taperleaf Rear Suspension	14QK-2113P4		.....	85007 or 89412

RW Series

	RW Series - 4" Wide Springs	14QK-373		83215	.....
		14QK-378M		83215	.....
	RW Series with Camelback Rear Suspension (SS34 & 38)	14QK-2107P1		.....	83215
		14QK-2107P2		.....	83215
	RW Series with Neway ARD-234 Air Suspension	14QK-375M		.....	83123 or 89405

Gabriel Part Numbers that appear in BLUE are GasSLX, adjustable shocks.\ Los números de parte Gabriel imprimidos en AZUL son amortiguadores ajustables GasSLX. \ Les numéros de pièce Gabriel imprimés en BLEU sont des amortisseurs ajustables GasSLX.

Gabriel® COMMERCIAL VEHICLE

Year Año Année	Model Modelo Modèle	O.E.M. #	Mount	Front Delantero Avant	Rear Trasero Arrière

MACK RW Series .. cont'd

	RW Series with O.E.M. Number	14QK-2113P5		85001 or 89410	.....
		14QK-2133M		85001 or 89410	.....
		14QK-2133M2		85001 or 89410	.....
		14QK-377M		83215	.....
		14QK-392AM		85005 or 89430	85005 or 89430
	RW Series with Taperleaf Rear Suspension	14QK-2113P4		.....	85007 or 89412

Mack Additional Series

	B Series	14QK-142		.....	85305
	CF Fire Chassis	14QK-2102		.....	85304
	CM 422 Tractor	14QK-390		83105	.....
		V10242320		83105	.....
	DM Series	.....		83209 or 89414	.....
		.....		.....	83215
	MB Series	.....		.....	83215
		.....		83221	.....
		14QK-2100P4		83207 or 89407	.....
	Model 75 Bogie Axle	.....		.....	83215
	Models with 12000 lb Taperleaf Spring	14QK-392AM3		85005 or 89430	.....
	Models with Hendrickson HAS-40LH Air Suspension (O.E. Number 57241-4)	14QK-413M4		.....	83110
	Models with Inverted Camelback Spring Suspension	14QK-142P1		83215	.....
	Models with MAC AL405 Suspension	14QK-413M7		.....	83111
	R, RU, RD600 Series-3 1/2" Wide springs	14QK-366P1		85036 or 89405	.....
	R, U Series	.....		.....	83215
		.....		83221	.....
	R, U, RD 600 Series	14QK-2115		85305	.....
		14QK-29302		83207 or 89407	.....
	R, U, RD 600 Series/ MR600 Series with Front Taperleaf Springs	14QK-366		85036 or 89405	.....
		14QK-366P1		85036 or 89405	.....
	RB 600 Series (Drive Axle)	14QK-2107		.....	83215
		14QK-393M		.....	85010
	RD Series with ST34 Suspension	14QK-2113M		85001 or 89410	.....
	RD800 Series with Shock Absorbers & Taperleaf Suspension (SWT & SWTL 561)(ST-34)	14QK-2110		85305	.....
1975-79	W Series - Western	.....		83207 or 89407	.....
		.....		.....	83215
	With Neway Rear Suspension (With O.E.Stamping 90045099)	14QK-414M		.....	85906

Gabriel Part Numbers that appear in BLUE are GasSLX, adjustable shocks.\ Los números de parte Gabriel imprimidos en AZUL son amortiguadores ajustables GasSLX. \
Les numéros de pièce Gabriel imprimés en BLEU sont des amortisseurs ajustables GasSLX.

Gabriel® COMMERCIAL VEHICLE

MACK Mack Additional Series Series .. cont'd

Year Año Année	Model Modelo Modèle	O.E.M. #	Mount	Front Delantero Avant	Rear Trasero Arrière
	Models with O.E.M. Number	14QK-1200P4		83207 or 89407	.....
		14QK-140		85304	.....
		14QK-142AP1		83215	.....
		14QK-145		85307	.....
		14QK-2100P2		83209 or 89414	.....
		14QK-2100P3		83207 or 89407	.....
		14QK-2100P5		83221	.....
		14QK-2100P6		85036 or 89405	.....
		14QK-2100P7		83221	.....
		14QK-2105		83209 or 89414	.....
		14QK-2107		.....	83215
		14QK-2107P2		83215	.....
		14QK-2107P3		83215	.....
		14QK-2108		83203 or 89436	.....
		14QK-2113P3		85001 or 89410	.....
		14QK-2113P6		85007 or 89412	.....
		14QK-2133M		85001 or 89410	.....
		14QK-2133M2		85001 or 89410	.....
		14QK-29001P2		85303	.....
		14QK-29301P1		83207 or 89407	.....
		14QK-29301P2		83207 or 89407	.....
		14QK-366		85036 or 89405	.....
		14QK-366P1		85036 or 89405	85036 or 89405
		14QK-366P2		85036 or 89405	.....
		14QK-366P3		85036 or 89405	.....
		14QK-372M3		83122 or 89406	.....
		14QK-378		83215	.....
		14QK-391AM		83041	.....
		14QK-393M		.....	85010
		14QK-396M		85005 or 89430	.....
		14QK-410M2		.....	83137
		14QK-413M5		.....	83138
		14QK-413M6		.....	83111
		14QK-413M7		.....	83111
		14QK-414M2		.....	85909
		14QK-415M		.....	83112
		14QK-431M		85061 or 89450	.....
		202SU14		.....	.....
		651103		85036 or 89405	.....

Gabriel Part Numbers that appear in BLUE are GasSLX, adjustable shocks.\ Los números de parte Gabriel imprimidos en AZUL son amortiguadores ajustables GasSLX. \ Les numéros de pièce Gabriel imprimés en BLEU sont des amortisseurs ajustables GasSLX.

Gabriel® COMMERCIAL VEHICLE

Year Año Année	Model Modelo Modèle	O.E.M. #	Mount	Front Delantero Avant	Rear Trasero Arrière

MACK Mack Additional Series Series .. cont'd

	Additional O.E.M. Interchanges	14QK-140P1		83225	
		14QK-20001P2		85308 or 89422	
		14QK-2100P1		83221	
		14QK-2110P1		85305	
		14QK-282P3		83216	
		14QK-288P2		83217	
		14QK-29302P1		83207 or 89407	
		14QK-366P4		83209 or 89414	
		14QK-372M		83221	
		14QK-372M2		83209 or 89414	
		14QK-392M		85005 or 89430	
		4940654		83216	
		5533699		85302 or 89420	
		5554184		85302 or 89420	
		651012		83221	
		651151		83209 or 89414	
		70042		85302 or 89420	

MAECO

	Bus with O.E.M. Number	1668722		85030 or 89440	85030 or 89440
	FedEx Trucks with O.E.M. Number	16950		83118	.....
	Additional O.E.M. Interchanges	12608		83125	
		12608		83125	
		12788		83216	
		12866		83207 or 89407	
		6025		83122 or 89406	
		6026		83204	
		70018		85303	
		70021		85303	
		70029		85308 or 89422	
		70034		85302 or 89420	
		70039		85303	
		70041		85305	
		70042		85302 or 89420	
		70088		85307	
		70127		85006 or 89401	
		70128		85006 or 89401	
		70162		85716	
		70163		85302 or 89420	
		70164		85716	
		70300		85320 or 89429	
		70300		85320 or 89429	
		70317		89432	
		70334		85316 or 89426	
		70397		85006	
		70652		85030 or 89440	
		70663		85013 or 89414	
		74039		85303	

Gabriel Part Numbers that appear in BLUE are GasSLX, adjustable shocks.\ Los números de parte Gabriel imprimidos en AZUL son amortiguadores ajustables GasSLX. \
Les numéros de pièce Gabriel imprimés en BLEU sont des amortisseurs ajustables GasSLX.

Gabriel® COMMERCIAL VEHICLE

Year Año Année	Model Modelo Modèle	O.E.M. #	Mount	Front Delantero Avant	Rear Trasero Arrière
MARMON					
	Models with O.E.M. Number	1-7001		83216	.....
		37-1-1		83122 or 89406	.....
		51-139-28		.....	85003 or 89411
		51-163-7		.....	83123 or 89405
		576451		83122 or 89406	.....
		665147		83216	.....
MATSON SCHOOL BUS					
	Models with O.E.M. Number	5392387		85303	.....
MERCEDES					
	L1013, L1113	344-323-75		83100	.....
	L1116, L-1117 - Exc. 5900mm Wheel Base	344-323-75		83100	.....
MERITOR					
	FS230 Trailer Suspension (Light Duty)	A-7805P-1030		.....	85737
	FS230 Trailer Suspension (Std Duty)	A-7805L-1026		.....	87015
	FS230T	21227751		.....	87015
		671020		.....	87015
2001-	RHP11, RHP55 and RideSentry Trailer Suspension	A-7805L-1000		.....	85919
		202447		.....	85919
		A-3280-M-9711		.....	85919
MITSUBISHI- FUSO					
FE Series					
July 86-	FE434, FE439, FE444, FE450	MB025382		.....	.....
		MB161497		.....	G60003
1996- 97	FE639, FE639SP, FE639HDT	MC114595		.....	G60031
FF Series					
1986- Jan 87	FF415	MC813511		G60046	.....
FG Series					
July 89- Mar 91	FG434	MB161741		.....	.....
		MC110328		.....	.....
Apr 91- Mar 93	FG439	MB161748		.....	.....
		MB294287		.....	.....
FH Series					
Oct 87- 96	FH100 Suspension (All)	MC809390		.....	83103
		MC826268		G60164	.....

Gabriel Part Numbers that appear in BLUE are GasSLX, adjustable shocks.\ Los números de parte Gabriel imprimidos en AZUL son amortiguadores ajustables GasSLX. \ Les numéros de pièce Gabriel imprimés en BLEU sont des amortisseurs ajustables GasSLX.

Gabriel® COMMERCIAL VEHICLE

Year Año Année	Model Modelo Modèle	O.E.M. #	Mount	Front Delantero Avant	Rear Trasero Arrière

MITSUBISHI- FUSO .. cont'd

FK Series

Dec 86- Feb 91	FK414	MC809295		.....	.....
Nov 85- Nov 86	FK414	MC813511		G60046	.....
Mar 91- 95	FK417	MC809295		.....	.....
June 88- Feb91	FK455	MC814614		85009	.....
Nov 85- May 88	FK455	MC811327		.....	.....
Mar 91- June 93	FK457	MC814614		85009	.....

FM Series

June 88 - Feb 91	FM555	MC814614		85009	.....
Nov 85 - May 88	FM555	MC813135		83456 or 89447	.....
May 89 - June 93	FM557	MC814614		85009	.....

MOHAWK

	Additional O.E.M. Interchanges	01-0100-905		85303	
		050134508		85718	
		10134504		85715	
		10134506		85714	
		10234503		85714	
		10234504		85717	
		1235233		85736	
		20273544		83203 or 89436	
		22012082		85702	
		4968853		83216	
		6-367-7		85305	
		695195		85707	
		695196		85707	
		97-2201-00007		85703	
		97-2201-00011		85704	
		97-9999-02320		85704	
		MM-6886		83207 or 89407	
		MM-6957		83225	
		MM-74029		85308 or 89422	

MOR- RYDE SUSPENSION

	Bus Suspension	.....		.....	83103
	Recreational Vehicle	U0109-014		.....	83400
	Trailer Rear	U0109-7		.....	G60028

MOTOR COACH INDUSTRIES

	DL3 Bus	12L-5-88		.....	85729
		12L-5-89		.....	85729
		12L-5-96		85728	.....
		12L-5-97		85728	.....

Gabriel Part Numbers that appear in BLUE are GasSLX, adjustable shocks.\ Los números de parte Gabriel imprimidos en AZUL son amortiguadores ajustables GasSLX. \
Les numéros de pièce Gabriel imprimés en BLEU sont des amortisseurs ajustables GasSLX.

Gabriel® COMMERCIAL VEHICLE

Year Año Année	Model Modelo Modèle	O.E.M. #	Mount	Front Delantero Avant	Rear Trasero Arrière
MOTOR COACH INDUSTRIES .. cont'd					
	DL3 Bus -Drive Axle	12J-5-10		.....	85733
	DL3 Bus -Tag Axle	12L-5-100		.....	85727
		12L-5-114		.....	85727
	Drive Axle	12J-5-2		.....	85312
		12J-5-4		.....	85312
		12L-5-71		.....	85708
	MC5, MC7, MC8	12B-5-1		85700	85700
		3178157		85700	85700
	Tag Axle	12J-5-11		.....	85313
		12J-5-3		.....	85313
	Models with O.E.M. Number	12J-5-10		.....	85733
		12K-5-1		.....	.....
		12L-5-58		85728	.....
		12L-5-67		.....	.....
		12L-5-69		85700	.....
		12L-5-72		.....	.....
		12L-5-88		.....	85729
		12L-5-99		.....	.....
		3178154		.....	85735
		5316984		85313	85313
		680322		.....	85704
		695125		.....	85704
	Additional O.E.M. Interchanges	12G-5-1		85700	
		12J-5-6		85313	
		12J-5-7		85312	
		12J-5-9		85700	
		12L-5-70		85700	
		680470		85713	
		690029		85700	
		97-2201-00151		85700	
MUNCIE RECLAMATION					
	Models with O.E.M. Number	H53-20415-006		.....	85051
		MR-6394		85723	.....
		MR-6536		.....	.....
	Additional O.E.M. Interchanges	MR1623		85700	
		MR1710		85713	
		MR1751		85713	
		MR1763		85300 or 89419	
		MR1765		85713	
		MR25767		85702	
		MR2960		85702	
		MR2961		85701	
		MR2996		85704	
		MR2997		85703	
		MR3303		85709	
		MR3304		85710	
		MR3304H		85709	
		MR3306		85705	
		MR3307		85707	
		MR3650		85707	
		MR6535		85708	
		MR7388		85710	

Gabriel Part Numbers that appear in BLUE are GasSLX, adjustable shocks.\ Los números de parte Gabriel imprimidos en AZUL son amortiguadores ajustables GasSLX. \ Les numéros de pièce Gabriel imprimés en BLEU sont des amortisseurs ajustables GasSLX.

Gabriel® COMMERCIAL VEHICLE

Year Año Année	Model Modelo Modèle	O.E.M. #	Mount	Front Delantero Avant	Rear Trasero Arrière
	NAVISTAR - see INTERNATIONAL (NAVISTAR)				
	NATIONAL COACH CORP				
	Eldorado Coach RE-29	C800853		83207 or 89407	.....
	NEOPLAN BUS				
	Mini-Bus	24-1700-106-149		.....	83216
		24-1700-999-362		85009	.....
		BN1002002		85009	.....
		BT1002011		.....	83216
	Model 40	25-1700-101-426		85705	85705
		DT1002002		85707	85707
	Model 80B	CL1002003		85705	85705
		DZ1002002		85705	85705
	Models with O.E.M. Number	AA1002002		85705	85705
		AA1002003		85705	85705
		AA1802002		85705	85705
		AC1002002		85705	85705
		AC1002003		85705	85705
		DT1802002		85705	85705
		GJ1002002		85706	85706
		GJ1002003		85705	85705
		MM1002002		85705	85705
		MM1002003		85705	85705
	Additional O.E.M. Interchanges	CI 1002003		85705	
	NEW FLYER				
	Diesel Low Floor Coach	009863		85722	.....
		015813		.....	85708
	Models with O.E.M. Number	16415		85727	.....
	Additional O.E.M. Interchanges	064845		85711	
	NEWAY (HOLLAND) SUSPENSION SYSTEMS				
	Bus Air Suspension				
	ARDTB125 Series Bus Air Suspension (ARDTB125-6A)	90044448		.....	85051
	Trailer Air Suspension				
	AR120 Series Trailer Air Suspension				
	- (AR120, AR120-US, AR120-US-F)	90044626		.....	83126 or 89430
	- (AR120-L, AR120-US-L, -1, -2, -3)	90044625		.....	83125
	AR125 Series Trailer Air Suspension				
	- (AR125, AR125-US, AR125-US-F)	90044626		.....	83126 or 89430
	- (AR125-L, AR125-US-L, -1, -2, -3)	90044625		.....	83125
	AR165-US Series Trailer Air Suspension (AR165-US)	90044626		.....	83126 or 89430

Gabriel Part Numbers that appear in BLUE are GasSLX, adjustable shocks.\ Los números de parte Gabriel imprimidos en AZUL son amortiguadores ajustables GasSLX. \
Les numéros de pièce Gabriel imprimés en BLEU sont des amortisseurs ajustables GasSLX.

Gabriel® COMMERCIAL VEHICLE

NEWAY (HOLLAND) SUSPENSION SYSTEMS Trailer Air Suspension .. cont'd

Year Año Année	Model Modelo Modèle	O.E.M. #	Mount	Front Delantero Avant	Rear Trasero Arrière
	AR250 Series Trailer Air Suspension				
	- (AR-250-12)	90045054		.....	85051
	- (AR-250-14, -15)	90044642		.....	83127
	- (AR-250-16, -17)	90044089		.....	83124 or 89407
	AR41 Series Trailer Air Suspension	90044162		.....	83128
	AR45 Series Trailer Air Suspension (AR45, AR45-1)	90044162		.....	83128
	AR50 Series Trailer Air Suspension (AR50-US, AR50-US-F,-1,-2)	90044162		.....	83128
	AR5041 Series Trailer Air Suspension (AR50-US, AR50-US-F, -1, -2)	90044162		.....	83128
	AR51 Series Trailer Air Suspension (AR51-US)	90044162		.....	83128
	AR70 and AR70A Series (All)	90044626		.....	83126 or 89430
	AR75 Series Trailer Air Suspension				
	- (AR75-12)	90044625		.....	83125
	- (AR75-6, -9, -1-12)	90044626		.....	83126 or 89430
	AR80 Series Trailer Air Suspension				
	- (AR80-6.75)	90044046		.....	83123 or 89405
	- (AR80-6.75)	90045096		.....	85916
	- (AR-80-9, -9FM)	90044868		.....	85045
	- (AR80-9-WST)	90044626		.....	83126 or 89430
	AR85A Series Trailer Air Suspension (AR85-A)	90044625		.....	83125
	AR90 Series Trailer Air Suspension				
	- (AR90-14, -15, -16, -17)	90044089		.....	83124 or 89407
	AR90-1 Series Trailer Air Suspension				
	- (AR90-1-12, -14, -17)	90044162		.....	83128
	- (AR90-1-15, -16)	90044448		.....	85051
	- (AR90-1-15, -16)	90045054		.....	85051
	AR92 Series Trailer Air Suspension				
	- (AR92-12)	90044162		.....	83128
		90044992		.....	85000 or 89436
	- (AR92-14)	90045040		.....	83130
	- (AR92-15)	90044448		.....	85051
		90045054		.....	85051
	- (AR92-15.75)	90045054		.....	85051
	- (AR92-16)	90044794		.....	83127
	- (AR92-17)	90044642		.....	83127
	- (AR92-18)	90044089		.....	83124 or 89407
		90044769		.....	83207 or 89407

Gabriel Part Numbers that appear in BLUE are GasSLX, adjustable shocks.\ Los números de parte Gabriel imprimidos en AZUL son amortiguadores ajustables GasSLX. \ Les numéros de pièce Gabriel imprimés en BLEU sont des amortisseurs ajustables GasSLX.

Gabriel COMMERCIAL VEHICLE

NEWAY (HOLLAND) SUSPENSION SYSTEMS Trailer Air Suspension .. cont'd

Year Año Année	Model Modelo Modèle	O.E.M. #	Mount	Front Delantero Avant	Rear Trasero Arrière
	AR93 Series Trailer Air Suspension				
	- (AR93-14)	90044448		.....	85051
		90045054		.....	85051
	- (AR93-15)	90044794		.....	83127
	- (AR93-16)	90044642		.....	83127
	- (AR93-17)	90044089		.....	83124 or 89407
		90044769		.....	83207 or 89407
	AR94 Series Trailer Air Suspension	90045028		.....	85907
		90045048		.....	85905
		90045049		.....	85905
	AR95, AR95A (All) Series Trailer Air Suspension				
	- (AR95-9HD, -12HD, -14HD, -17HD, AR95A-9HD, -12HD, -14HD, -17HD)	90044625		.....	83125
	AR955 Series Trailer Air Suspension (Liftaxle)				
	- (AR955-9, -12, -14, -17, AR955-9HD, -12HD, -14HD, -17HD)	90044625		.....	83125
	AR955A-9, -12, -14, -17 Series Trailer Air Suspension	90044625		.....	83125
	AR955A-9HD, -12HD, -14HD, -17HD Series Trailer Air Suspension	90044625		.....	83125
	ARA93 Series Trailer Air Suspension (ARA93-14)	90045054		.....	85051
	ARL20 Series Trailer Air Suspension (ARL20-D, ARL20-D-US)	90044162		.....	83128
	ARS112 Series Trailer Air Suspension (ARS112-6)	90045096		.....	85916
	ARU-92-8, -9, -10, -12 Series Trailer Air Suspension	90044642		.....	83127
	ARU93 Series Trailer Air Suspension (ARU93-6)	90045040		.....	83130
	ARU-93-7, -8, -9, -10, Series Trailer Air Suspension	90044642		.....	83127
	ARU98 Series Trailer Air Suspension (ARU98-17)	90045054		.....	85051
	RL196 Series Trailer Air Suspension				
	- (RL196-12)	90044977		.....	83115
	- (RL196-14,-15)	90044978		.....	85059
	- (RL-196-16, -17)	90044979		.....	83113
	RL-196A-12 Series Trailer Air Suspension	90044162		.....	83128
	RL-196A-14, -15 Series Trailer Air Suspension	90045040		.....	83130
	RL-196A-16, -17 Series Trailer Air Suspension	90044794		.....	83127
	RL228 Series Trailer Air Suspension (RL-228-14, -15, -16)	90044642		.....	83127
	RL228 Series Trailer Air Suspension (RL-228-17)	90044089		.....	83124 or 89407
	RL250 Series Trailer Air Suspension (RL-250-12)	90045054		.....	85051
	RL250 Series Trailer Air Suspension (RL-250-14, -15)	90044642		.....	83127
	RL250 Series Trailer Air Suspension (RL-250-16, -17)	90044089		.....	83124 or 89407
	RL300 Series Trailer Air Suspension (RL-300-15-17	90045338		.....	.....
	RLSA Series Trailer Air Suspension (RLSA-4212, -4812)	90044977		.....	83115
	RLSA Series Trailer Air Suspension (RLSA-4214, -4215, -4814, -4815)	90044978		.....	85059
	RLSA Series Trailer Air Suspension (RLSA-4216, -4217, -4816, -4817)	90044979		.....	83113
	RLSA228 Series Trailer Air Suspension (RLSA-228-4214, -4215, -4216, -4814, -4815, -4816)	90044642		.....	83127
	RLSA228 Series Trailer Air Suspension (RLSA-228-4217, -4817)	90044089		.....	83124 or 89407

Gabriel Part Numbers that appear in BLUE are GasSLX, adjustable shocks.\ Los números de parte Gabriel imprimidos en AZUL son amortiguadores ajustables GasSLX. \ Les numéros de pièce Gabriel imprimés en BLEU sont des amortisseurs ajustables GasSLX.

Gabriel® COMMERCIAL VEHICLE

Year Año Année	Model Modelo Modèle	O.E.M. #	Mount	Front Delantero Avant	Rear Trasero Arrière

NEWAY (HOLLAND) SUSPENSION SYSTEMS Trailer Air Suspension .. cont'd

	RLU250 Series - Heavy Duty Low Profile (RLU-250-9, 250-9-FMT)	90044089		.....	83124 or 89407
	Trailer Air Suspension (RL196-16,-17)	90044979		.....	83113
	Models with O.E.M. Number	90044989		.....	85915
		90045002		.....	85906
		90045019		.....	85913
		90045050		.....	85914
		90045080		.....	85912
		90045083		.....	85910
		90045188		.....	85910

Truck & Tractor Air Suspension (Drive Axle)

	AD-123 Series Truck and Tractor Air Suspension (AD123-6,-8,-10,-8.75)	90045068		.....	89441
	- Shock Mount approx. 2-1/2" above bottom of frame	90045132		.....	85909
	- Shock Mount flush with bottom of frame	90045099		.....	85906
	AD-130 Series Truck and Tractor Air Suspension (AD123-6,-8,-10,-8.75)	90045466		.....	89406
	AD-150 Series Truck & Tractor Air Suspension	90045075		.....	85911
	AD-200 Series Truck & Tractor Air Suspension (AD200-7, -8, -9, -11)	90045138		.....	85910
	AD-246 Series Truck & Tractor Air Suspension (AD246 -6, -8, -10, -8.75)	90045099		.....	85906
		90045132		.....	85909
	AD-252-10 Tandem Axle	90045132		.....	85909
	ARD120 Series Truck & Tractor Air Suspension (ARD120-6)	90044025		.....	83209 or 89414
	ARD125 Series Truck & Tractor Air Suspension				
	- (ARD125-6 use on Ford, GM, International (Navistar), Mack, White, Western Star, Freightliner)	90044025		.....	83209 or 89414
	- (ARD125-8 use on Freightliner, White, Western Star)	90044011		.....	85004
	- (ARD125-8 use on Mack)	90044016		.....	85300 or 89419
	ARD165 Series Truck & Tractor Air Suspension (ARD165-A, ARD165-B)	90044011		.....	85004
	ARD190 Series Truck & Tractor Air Suspension (ARD190-B)	90044016		.....	85300 or 89419
	ARD234 Series Truck & Tractor Air Suspension (ARD234-6)	90044046		.....	83123 or 89405
	ARD238 Series Truck & Tractor Air Suspension (ARD238-6)	90044025		.....	83209 or 89414
	ARD244 Series Truck & Tractor Air Suspension				
	- (ARD244-6 use on Ford, GM, International (Navistar), Mack, White, Western Star, Freightliner)	90044025		.....	83209 or 89414
	- (ARD244-8 use on Freightliner, White, Western Star)	90044011		.....	85004
	- (ARD244-8 use on Mack)	90044016		.....	85300 or 89419
	ARDAB120 Series Truck & Tractor Air Suspension (ARDAB120-5)	90044907		.....	83635
	ARDAB-238-5 Series Truck & Tractor Air Suspension	90044907		.....	83635
	ARDAB240 Series Truck & Tractor Air Suspenion (ARDAB240-5)	90044907		.....	83635
	ARDST123 Series Truck & Tractor Air Suspension (ARDST123-6, ARDST M/L-123-6)	90044025		.....	83209 or 89414
	ARDST244 Series Truck & Tractor Air Suspension (ARDST244-6)	90044025		.....	83209 or 89414
	ARDST246 Series Truck & Tractor Air Suspension (ARDST246-6, ARDST M/L-246-6)	90044025		.....	83209 or 89414

Gabriel Part Numbers that appear in BLUE are GasSLX, adjustable shocks.\ Los números de parte Gabriel imprimidos en AZUL son amortiguadores ajustables GasSLX. \ Les numéros de pièce Gabriel imprimés en BLEU sont des amortisseurs ajustables GasSLX.

Gabriel® COMMERCIAL VEHICLE

Year Año Année	Model Modelo Modèle	O.E.M. #	Mount	Front Delantero Avant	Rear Trasero Arrière

NEWAY (HOLLAND) SUSPENSION SYSTEMS Truck & Tractor Air Suspension (Drive Axle) .. cont'd

	ARDST-250-6 Series Truck & Tractor Air Suspension	90044025		.....	83209 or 89414
	ARDTB-125-6A (Note: Front shock)	90045050		.....	85914
	ARDTB-125-6A (Note: Rear shock)	90045053		.....	85908

Truck & Tractor Air Suspension (Tag Axle)

	ART500 Series Truck & Tractor Tag Axle Air Suspension (ART500B-1, ART500-US, ART500-US-A)	90044162		.....	83128
	ART505 Series Truck & Tractor Tag Axle Air Suspension (ART505B, -1, ART505C, -1)	90044162		.....	83128
	ART541 Series Truck & Tractor Tag Axle Air Suspension (ART541B)	90044162		.....	83128
	ART550 Series Truck & Tractor Tag Axle Air Suspension (ART550-US-1, -2, -3)	90044625		.....	83125
	ART551 Series Truck & Tractor Tag Axle Air Suspension (ART551-B-1, -2, -3)	90044642		.....	83127
	ART555 Series Truck & Tractor Tag Axle Air Suspension				
	- (ART555B-1, ART555C-1)	90044162		.....	83128
	- (ART55B-2, -3, ART555C-2, -3)	90044642		.....	83127
	Models with O.E.M. Number	57639		.....	85000 or 89436
		57643		.....	85013 or 89414
		6025		.....	83122 or 89406
		6026		.....	83204
		90044001		.....	85005 or 89430
		90044008		.....	85000 or 89436
		90044012		.....	85006
		90044017		.....	83204
		90044071		.....	85000 or 89436
		90044081		.....	85000 or 89436
		90044086		.....	85000 or 89436
		90044089C		.....	83124 or 89407
		90044095		.....	83203 or 89436
		90044679		.....	83122 or 89406
		90044680		.....	83125
		90044681		.....	83204
		90044682		.....	83209 or 89414
		90044683		.....	83122 or 89406
		90044684		.....	83124 or 89407
		90044685		.....	83128
		90044686		.....	85051
		90044687		.....	83125
		90044688		.....	83122 or 89406
		90044769		.....	83207 or 89407

Gabriel Part Numbers that appear in BLUE are GasSLX, adjustable shocks.\ Los números de parte Gabriel imprimidos en AZUL son amortiguadores ajustables GasSLX. \ Les numéros de pièce Gabriel imprimés en BLEU sont des amortisseurs ajustables GasSLX.

Gabriel® COMMERCIAL VEHICLE

Year Año Année	Model Modelo Modèle	O.E.M. #	Mount	Front Delantero Avant	Rear Trasero Arrière

NEWAY (HOLLAND) SUSPENSION SYSTEMS Truck & Tractor Air Suspension (Tag Axle) .. cont'd

	Models with O.E.M. Number	90044769		.....	83207 or 89407
		90044770		.....	83207 or 89407
		90044833		.....	85052
		90044834		.....	85052
		90044878		.....	83635
		90044915		89437	.....
		90044915		.....	89437
		90044968		.....	.....
		90044981		.....	85000 or 89436
		90044982		.....	85000 or 89436
		90044991		.....	.....
		90045028		.....	85907
		90045110		.....	83121
		90045175		.....	85916
		90045298		.....	83128
		90045299		.....	85000 or 89436
		900455002		.....	.....
		900455003		.....	85323 or 89436
		AR-1008		.....	85006
		AR-1141		.....	83204
		AR-1141-C		.....	83204
		AR-1202		.....	85300 or 89419
		AR-134-C		.....	85005 or 89430
		AR-1404		.....	85301
		AR-1425		.....	85301
		AR-1434		.....	83203 or 89436
		AR-1654		.....	83209 or 89414
		AR-1822		.....	85304
		AR-2451		.....	83203 or 89436
		AR-2598		.....	83123 or 89405
		AR-718-C		.....	83203 or 89436
		AR-718-C-HD		.....	85000 or 89436
		AR-781		.....	83203 or 89436
		AR-958		.....	83207 or 89407
		AR-995		.....	85734

NISSAN

	UD 1800 Series	56110-Z5008		83114	.....
	UD 2000 Series	56110-Z5011		G60164	.....

Gabriel Part Numbers that appear in BLUE are GasSLX, adjustable shocks.\ Los números de parte Gabriel imprimidos en AZUL son amortiguadores ajustables GasSLX. \ Les numéros de pièce Gabriel imprimés en BLEU sont des amortisseurs ajustables GasSLX.

Gabriel® COMMERCIAL VEHICLE

Year Año Année	Model Modelo Modèle	O.E.M. #	Mount	Front Delantero Avant	Rear Trasero Arrière
NOVA BUS					
	Classic Bus with O.E.M. Number	97-2201-00151		85700	85700
	RTS Bus	22012079		85701	.....
		22045526		.....	85702
		22052014		.....	85702
		4975515		85701	.....
		695117		85701	.....
		74410		85701	.....
		G1011822		.....	85702
	RTS Bus with "V" Drive	G1011823		85710	.....
		G1101590		.....	85713
OLE GRANNING					
	Models with O.E.M. Number	1086		83217	.....
ONEIDA PRODUCTS					
	School Bus w/Heavy Duty Suspension	.....		85307	85307
	School Bus w/Standard Suspension	.....		83216	83216
ORION BUS INDUSTRIES					
	Orion 1	010134505-4		85715	.....
		010134509-4		85717	.....
		010234503-4		.....	85308 or 89422
		010234506-4		.....	85714
	Orion 102	050134501-4		85716	.....
		050230501		.....	85716
		050231505		.....	85716
	Orion II	010134505-4		85715	.....
		010234503-4		.....	85308 or 89422
		020117504		85720	.....
		20117501		85720	.....
		20117503		85720	.....
		20117505		85720	.....
		20273541		83203 or 89436	.....
		20273544		83203 or 89436	.....
		20273546		.....	85719
		20273547		.....	85719
		20273548		.....	85719
		20273549		.....	85719
	Orion V	010134508-4		85718	.....
		050134502-4		85718	.....
		050134506-4		85718	.....
		0501345-10		85732	.....
		0501345-13		85732	.....
		050231505		.....	85716
	Models with O.E.M. Number	695343		85732	.....
	Additional O.E.M. Interchanges	010134501-4		85307	
		010134504-4		85715	
		010134506-4		85717	
		020273541-4		85000 or 89436	
		020273547-4		85719	

Gabriel Part Numbers that appear in BLUE are GasSLX, adjustable shocks.\ Los números de parte Gabriel imprimidos en AZUL son amortiguadores ajustables GasSLX. \
Les numéros de pièce Gabriel imprimés en BLEU sont des amortisseurs ajustables GasSLX.

Year Año Année	Model Modelo Modèle	O.E.M. #	Mount	Front Delantero Avant	Rear Trasero Arrière
ORION BUS INDUSTRIES .. cont'd					
	Additional O.E.M. Interchanges	020273549		85719	
		050134508		85718	
		0501345-11		85718	
		050231507		85716	
		680091		85303	
		680352		85711	
		A-4890		85712	
		M340027		.....	
		OB3166657		85700	
OSHKOSH MOTORS					
	Mobile Home - ForeTravel	1583470		.....	85051
	Models with 16" Long Shock Absorber w/1" Mounting Pins	.....		85303	.....
	Models with 3/4" Mounting Pins	.....		83122 or 89406	.....
	Motor Home with O.E. Number	1398980		83127	83127
		GBL654875		.....	83117
	V - Line Coach	1573280		.....	83221
	Models with O.E.M. Number	12405F		85734	.....
		12405F-1		85303	.....
		5353054		85303	.....
		5361994		85734	.....
		665040		85303	.....
		690049		85303	.....
	Additional O.E.M. Interchanges	1445910		85300 or 89419	
		1573270		83207 or 89407	
		1583470		85051	
		1745500		89430	
		2034140		632155	
		2173340		85303	
		2218640		83009	
		26228-A		83122 or 89406	
		2JD137		83119	
		40-0242		83312 or 89409	
		40-4845		85304	
		40-4951		85316 or 89426	
		40-5348		85058 or 89431	
		40-6967		85030 or 89440	
		665060		83122 or 89406	
OSTERLUND TRUCK					
	Models with O.E.M. Number	59011		83214	.....
		680117		85300 or 89419	.....
OTTAWA TRUCK					
	Yard Tractor	.....		85720	.....
		59009		83217	83217
	Additional O.E.M. Interchanges	53540451		85300 or 89419	
		90013787		85310 or 89423	
		90027577		85720	
		9007342		85303	

Gabriel Part Numbers that appear in BLUE are GasSLX, adjustable shocks.\ Los números de parte Gabriel imprimidos en AZUL son amortiguadores ajustables GasSLX. \ Les numéros de pièce Gabriel imprimés en BLEU sont des amortisseurs ajustables GasSLX.

Gabriel® COMMERCIAL VEHICLE

Year Año Année	Model Modelo Modèle	O.E.M. #	Mount	Front Delantero Avant	Rear Trasero Arrière
PACIFIC TRUCK & TRAILER					
	Additional O.E.M. Interchanges	3178157C 507202CI		85735 85030 or 89440	
PAGE SUSPENSION					
	Model with LM-2000 Series Lift Axle Suspension	1080099		.....	83203 or 89436
	Model with Trailmaster Air Spring Suspension	1081933 A-2212		....	83204 85029
	Models with O.E.M. Number	665133 665267		....	83203 or 89436 85029
PAI CORP					
	Models with O.E.M. Number	HSA-5067 HSA-5080 HSA-5095		85305 83221 83215	....
PEERLESS TRAILER					
	Models with Air Suspension	72-61		.....	83125
	Models with O.E.M. Number	120-1		.....	83125
PETERBILT					
270 Series					
	Models with Woodhead Shock (Stamping Number ACHB 966)	ACHB966		.....	83136
320 Series					
	320 Models with Split Progressive Springs	02-01787 02-02737		85062 or 89408 85062 or 89408	....
330 Series					
	Models with 12000 lb Set Back Front Axle	02-02738		85012 or 89413	.....
- 2002	Models with Peterbilt 40000 lb Low Air Leaf Suspension	03-07423		.....	85033 or 89427
2003 -	Models with Peterbilt 40000 lb Low Air Leaf Suspension	03-08781		.....	85069 or 89455
	Models with O.E.M. Number	02-03020		85910	.....
349 Series					
	349 Conventional Models with 12000 lb capacity	02-00376 02-00495 02-02736		85302 or 89420 85302 or 89420 85302 or 89420	....
353 Series					
	353 Conventional Models with 12000 lb capacity	02-00376 02-00495 02-02736		85302 or 89420 85302 or 89420 85302 or 89420	....

Gabriel Part Numbers that appear in BLUE are GasSLX, adjustable shocks.\ Los números de parte Gabriel imprimidos en AZUL son amortiguadores ajustables GasSLX. \ Les numéros de pièce Gabriel imprimés en BLEU sont des amortisseurs ajustables GasSLX.

Gabriel® COMMERCIAL VEHICLE

Year Año Année	Model Modelo Modèle	O.E.M. #	Mount	Front Delantero Avant	Rear Trasero Arrière

PETERBILT .. cont'd

357 Series

	Conventional Models with Front Air Suspension and Set Back Front Axle.	02-02061		85013 or 89414	.....
		02-02739		85013 or 89414	.....
	Conventional Models with Front Air Suspension and without Set Back Front Axle.	02-02142		85036 or 89405	.....
		02-02740		85036 or 89405	.....
	Conventional Models with Spring Suspension and with Set Back Front Axle.	02-01890		85012 or 89413	.....
		02-02738		85012 or 89413	.....
		02-02741		85012 or 89413	.....
	Conventional Models with Spring Suspension and without Set Back Front Axle.	02-01787		85062 or 89408	.....
		02-02737		85062 or 89408	.....
		02-02742		85062 or 89408	.....
to 1982	Models with Air Trac Suspension (38000 or 40000 lb)	03-01635		.....	85308 or 89422
		03-04176		.....	85308 or 89422
after Nov 82	Models with Air Trac Suspension (38000 or 40000 lb)	03-04629		.....	85311 or 89424
		03-07421		.....	85311 or 89424
	Models with Chalmers 40,000 lb Rear Suspension	665174		.....	85060
	Models with Neway ARD 125/244-8 Series Rear Air Suspension	90044011		.....	85004
	Models with Peterbilt Air Leaf Suspension (Early Style)	03-04176		.....	85308 or 89422
	Models with Peterbilt Air Leaf Suspension (New Style)	03-04629		.....	85311 or 89424
		03-07421		.....	85311 or 89424
2003& up	Models with Peterbilt Low Air Leaf Suspension	03-08781		.....	85069 or 89455
	Models with Peterbilt Low Air Leaf Suspension	03-05384		.....	85033 or 89427
		03-06084		.....	85033 or 89427
		03-07423		.....	85033 or 89427
		665633		.....	85033 or 89427

359 Series

	359 Conventional Models with 12000 lb capacity	02-00376		85302 or 89420	.....
		02-00495		85302 or 89420	.....
		02-02736		85302 or 89420	.....

Gabriel Part Numbers that appear in BLUE are GasSLX, adjustable shocks.\ Los números de parte Gabriel imprimidos en AZUL son amortiguadores ajustables GasSLX. \ Les numéros de pièce Gabriel imprimés en BLEU sont des amortisseurs ajustables GasSLX.

Gabriel® COMMERCIAL VEHICLE

PETERBILT .. cont'd

362 Series

Year / Año / Année	Model / Modelo / Modèle	O.E.M. #	Mount	Front / Delantero / Avant	Rear / Trasero / Arrière
	C.O.E. Models with 12000 lb capacity	02-02736		85302 or 89420	.....
	C.O.E. Models with 14600 lb Taper Leaf Springs and Set Back Front Axle	02-02142		85036 or 89405	.....
		02-02740		85036 or 89405	.....
	C.O.E. Models with 14600 lb Taper Leaf Springs and Set Forward Front Axle	680599		.....	.....
	C.O.E. Models with Progressive Springs	02-01890		85012 or 89413	.....
		02-02738		85012 or 89413	.....
	C.O.E. Models without Set Back Front Axle	02-00376		85302 or 89420	.....
		02-00495		85302 or 89420	.....
to Nov 82	Models with Air Trac Suspension (38000 or 40000 lb)	03-04176		.....	85308 or 89422
after Nov 82	Models with Air Trac Suspension (38000 or 40000 lb)	03-04629		.....	85311 or 89424
		03-07421		.....	85311 or 89424
	Models with Chalmers 40,000 lb Rear Suspension	665174		.....	85060
	Models with Neway ARD 125/244-8 Series Rear Air Suspension	90044011		.....	85004
	Models with Peterbilt Air Leaf Suspension (Early Style)	03-04176		.....	85308 or 89422
	Models with Peterbilt Air Leaf Suspension (New Style)	03-04629		.....	85311 or 89424
		03-07421		.....	85311 or 89424
2003 & up	Models with Peterbilt Low Air Leaf Suspension	03-08781		.....	85069 or 89455
	Models with Peterbilt Low Air Leaf Suspension	03-05384		.....	85033 or 89427
		03-06084		.....	85033 or 89427
		03-07423		.....	85033 or 89427
		665633		.....	85033 or 89427

372 Series

	C.O.E. Models with Front Air Suspension	02-02061		85013 or 89414	.....
		02-02739		85013 or 89414	.....
	C.O.E. Models with Front Spring Suspension	02-01890		85012 or 89413	.....
		02-02738		85012 or 89413	.....
to Nov 82	Models with Air Trac Suspension (38000 or 40000 lb)	03-04176		.....	85308 or 89422
after Nov 82	Models with Air Trac Suspension (38000 or 40000 lb)	03-04629		.....	85311 or 89424
		03-07421		.....	85311 or 89424
	Models with Chalmers 40,000 lb Rear Suspension	665174		.....	85060

Gabriel Part Numbers that appear in BLUE are GasSLX, adjustable shocks.\ Los números de parte Gabriel imprimidos en AZUL son amortiguadores ajustables GasSLX. \ Les numéros de pièce Gabriel imprimés en BLEU sont des amortisseurs ajustables GasSLX.

Gabriel® COMMERCIAL VEHICLE

Year Año Année	Model Modelo Modèle	O.E.M. #	Mount	Front Delantero Avant	Rear Trasero Arrière
PETERBILT 372 Series .. cont'd					
	Models with Neway ARD 125/244-8 Series Rear Air Suspension	90044011		.....	85004
	Models with Peterbilt Air Leaf Suspension (Early Style)	03-04176		.....	85308 or 89422
	Models with Peterbilt Air Leaf Suspension (New Style)	03-04629		.....	85311 or 89424
		03-07421		.....	85311 or 89424
2003 & up	Models with Peterbilt Low Air Leaf Suspension	03-08781		.....	85069 or 89455
	Models with Peterbilt Low Air Leaf Suspension	03-05384		.....	85033 or 89427
		03-06084		.....	85033 or 89427
		03-07423		.....	85033 or 89427
		665633		.....	85033 or 89427
375 Series					
	Conventional Models with Front Air Suspension and Set Back Front Axle.	02-02061		85013 or 89414	.....
		02-02739		85013 or 89414	.....
	Conventional Models with Front Air Suspension and without Set Back Front Axle.	02-02142		85036 or 89405	.....
		02-02740		85036 or 89405	.....
	Conventional Models with Spring Suspension and with Set Back Front Axle.	02-01890		85012 or 89413	.....
		02-02738		85012 or 89413	.....
		02-02741		85012 or 89413	.....
	Conventional Models with Spring Suspension and without Set Back Front Axle.	02-01787		85062 or 89408	.....
		02-02737		85062 or 89408	.....
		02-02742		85062 or 89408	.....
to Nov 82	Models with Air Trac Suspension (38000 or 40000 lb)	03-04176		.....	85308 or 89422
after Nov 82	Models with Air Trac Suspension (38000 or 40000 lb)	03-04629		.....	85311 or 89424
		03-07421		.....	85311 or 89424
	Models with Chalmers 40,000 lb Rear Suspension	665174		.....	85060
	Models with Neway ARD 125/244-8 Series Rear Air Suspension	90044011		.....	85004
	Models with Peterbilt Air Leaf Suspension (Early Style)	03-04176		.....	85308 or 89422
	Models with Peterbilt Air Leaf Suspension (New Style)	03-04629		.....	85311 or 89424
		03-07421		.....	85311 or 89424
2003 & up	Models with Peterbilt Low Air Leaf Suspension	03-08781		.....	85069 or 89455

Gabriel Part Numbers that appear in BLUE are GasSLX, adjustable shocks.\ Los números de parte Gabriel imprimidos en AZUL son amortiguadores ajustables GasSLX. \ Les numéros de pièce Gabriel imprimés en BLEU sont des amortisseurs ajustables GasSLX.

Gabriel COMMERCIAL VEHICLE

Year Año Année	Model Modelo Modèle	O.E.M. #	Mount	Front Delantero Avant	Rear Trasero Arrière
PETERBILT 375 Series .. cont'd					
	Models with Peterbilt Low Air Leaf Suspension	03-05384		.....	85033 or 89427
		03-06084		.....	85033 or 89427
		03-07423		.....	85033 or 89427
		665633		.....	85033 or 89427
376 Series					
	Conventional Models with Front Air Suspension and Set Back Front Axle.	02-02061		85013 or 89414	.....
		02-02739		85013 or 89414	.....
	Conventional Models with Front Air Suspension and without Set Back Front Axle.	02-02142		85036 or 89405	.....
		02-02740		85036 or 89405	.....
	Conventional Models with Spring Suspension and with Set Back Front Axle.	02-01890		85012 or 89413	.....
		02-02738		85012 or 89413	.....
		02-02741		85012 or 89413	.....
	Conventional Models with Spring Suspension and without Set Back Front Axle.	02-01787		85062 or 89408	.....
		02-02737		85062 or 89408	.....
		02-02742		85062 or 89408	.....
to Nov 82	Models with Air Trac Suspension (38000 or 40000 lb)	03-04176		.....	85308 or 89422
after Nov 82	Models with Air Trac Suspension (38000 or 40000 lb)	03-04629		.....	85311 or 89424
		03-07421		.....	85311 or 89424
	Models with Chalmers 40,000 lb Rear Suspension	665174		.....	85060
	Models with Neway ARD 125/244-8 Series Rear Air Suspension	90044011		.....	85004
	Models with Peterbilt Air Leaf Suspension (Early Style)	03-04176		.....	85308 or 89422
	Models with Peterbilt Air Leaf Suspension (New Style)	03-04629		.....	85311 or 89424
		03-07421		.....	85311 or 89424
2003 & up	Models with Peterbilt Low Air Leaf Suspension	03-08781		.....	85069 or 89455
	Models with Peterbilt Low Air Leaf Suspension	03-05384		.....	85033 or 89427
		03-06084		.....	85033 or 89427
		03-07423		.....	85033 or 89427
		665633		.....	85033 or 89427

Gabriel Part Numbers that appear in BLUE are GasSLX, adjustable shocks.\ Los números de parte Gabriel imprimidos en AZUL son amortiguadores ajustables GasSLX. \
Les numéros de pièce Gabriel imprimés en BLEU sont des amortisseurs ajustables GasSLX.

Gabriel® COMMERCIAL VEHICLE

Year Año Année	Model Modelo Modèle	O.E.M. #	Mount	Front Delantero Avant	Rear Trasero Arrière

PETERBILT .. cont'd

377 Series

	Conventional Models with Front Air Suspension and Set Back Front Axle.	02-02061		85013 or 89414	.....
		02-02739		85013 or 89414	.....
	Conventional Models with Front Air Suspension and without Set Back Front Axle.	02-02142		85036 or 89405	.....
		02-02740		85036 or 89405	.....
	Conventional Models with Spring Suspension and with Set Back Front Axle.	02-01890		85012 or 89413	.....
		02-02738		85012 or 89413	.....
		02-02741		85012 or 89413	.....
	Conventional Models with Spring Suspension and without Set Back Front Axle.	02-01787		85062 or 89408	.....
		02-02737		85062 or 89408	.....
		02-02742		85062 or 89408	.....
to Nov 82	Models with Air Trac Suspension (38000 or 40000 lb)	03-04176		.....	85308 or 89422
after Nov 82	Models with Air Trac Suspension (38000 or 40000 lb)	03-04629		.....	85311 or 89424
		03-07421		.....	85311 or 89424
	Models with Chalmers 40,000 lb Rear Suspension	665174		.....	85060
	Models with Neway ARD 125/244-8 Series Rear Air Suspension	90044011		.....	85004
	Models with Peterbilt Air Leaf Suspension (Early Style)	03-04176		.....	85308 or 89422
	Models with Peterbilt Air Leaf Suspension (New Style)	03-04629		.....	85311 or 89424
		03-07421		.....	85311 or 89424
	Models with Peterbilt Low Air Leaf Suspension	03-05384		.....	85033 or 89427
		03-06084		.....	85033 or 89427
		03-07423		.....	85033 or 89427
		665633		.....	85033 or 89427

378 Series

	Conventional Models with Front Air Suspension and Set Back Front Axle.	02-02061		85013 or 89414	.....
		02-02739		85013 or 89414	.....
	Conventional Models with Front Air Suspension and without Set Back Front Axle.	02-02142		85036 or 89405	.....
		02-02740		85036 or 89405	.....
	Conventional Models with Spring Suspension and with Set Back Front Axle.	02-01890		85012 or 89413	.....
		02-02738		85012 or 89413	.....
		02-02741		85012 or 89413	.....

Gabriel Part Numbers that appear in BLUE are GasSLX, adjustable shocks.\ Los números de parte Gabriel imprimidos en AZUL son amortiguadores ajustables GasSLX. \ Les numéros de pièce Gabriel imprimés en BLEU sont des amortisseurs ajustables GasSLX.

Gabriel® COMMERCIAL VEHICLE

Year Año Année	Model Modelo Modèle	O.E.M. #	Mount	Front Delantero Avant	Rear Trasero Arrière

PETERBILT 378 Series .. cont'd

	Conventional Models with Spring Suspension and without Set Back Front Axle.	02-01787		85062 or 89408	.....
		02-02737		85062 or 89408	.....
		02-02742		85062 or 89408	.....
to Nov 82	Models with Air Trac Suspension (38000 or 40000 lb)	03-04176		.....	85308 or 89422
after Nov 82	Models with Air Trac Suspension (38000 or 40000 lb)	03-04629		.....	85311 or 89424
		03-07421		.....	85311 or 89424
	Models with Chalmers 40,000 lb Rear Suspension	665174		.....	85060
2001 & Up	Models with FlexAir Suspension (38000 lb)	C71-6000		.....	85067 or 89451
	Models with Neway ARD 125/244-8 Series Rear Air Suspension	90044011		.....	85004
	Models with Peterbilt Air Leaf Suspension (Early Style)	03-04176		.....	85308 or 89422
	Models with Peterbilt Air Leaf Suspension (New Style)	03-04629		.....	85311 or 89424
		03-07421		.....	85311 or 89424
	Models with Peterbilt Low Air Leaf Suspension	03-05384		.....	85033 or 89427
		03-06084		.....	85033 or 89427
		03-07423		.....	85033 or 89427
		665633		.....	85033 or 89427

379 Series

	Conventional Models with Front Air Suspension and Set Back Front Axle.	02-02061		85013 or 89414	.....
		02-02739		85013 or 89414	.....
	Conventional Models with Front Air Suspension and without Set Back Front Axle.	02-02142		85036 or 89405	.....
		02-02740		85036 or 89405	.....
	Conventional Models with Spring Suspension and with Set Back Front Axle.	02-01890		85012 or 89413	.....
		02-02738		85012 or 89413	.....
		02-02741		85012 or 89413	.....
	Conventional Models with Spring Suspension and without Set Back Front Axle.	02-01787		85062 or 89408	.....
		02-02737		85062 or 89408	.....
		02-02742		85062 or 89408	.....
to Nov 82	Models with Air Trac Suspension (38000 or 40000 lb)	03-04176		.....	85308 or 89422
after Nov 82	Models with Air Trac Suspension (38000 or 40000 lb)	03-04629		.....	85311 or 89424
		03-07421		.....	85311 or 89424
	Models with Chalmers 40,000 lb Rear Suspension	665174		.....	85060

Gabriel Part Numbers that appear in BLUE are GasSLX, adjustable shocks.\ Los números de parte Gabriel imprimidos en AZUL son amortiguadores ajustables GasSLX. \ Les numéros de pièce Gabriel imprimés en BLEU sont des amortisseurs ajustables GasSLX.

Gabriel® COMMERCIAL VEHICLE

Year Año Année	Model Modelo Modèle	O.E.M. #	Mount	Front Delantero Avant	Rear Trasero Arrière
PETERBILT 379 Series .. cont'd					
2001 & Up	Models with FlexAir Suspension (38000 lb)	C71-6000		.....	85067 or 89451
	Models with Neway ARD 125/244-8 Series Rear Air Suspension	90044011		.....	85004
	Models with Peterbilt Air Leaf Suspension (Early Style)	03-04176		.....	85308 or 89422
	Models with Peterbilt Air Leaf Suspension (New Style)	03-04629		.....	85311 or 89424
		03-07421		.....	85311 or 89424
	Models with Peterbilt Low Air Leaf Suspension	03-05384		.....	85033 or 89427
		03-06084		.....	85033 or 89427
		03-07423		.....	85033 or 89427
		665633		.....	85033 or 89427
385 Series					
	Conventional Models with Spring Suspension and with Set Back Front Axle.	02-01890		85012 or 89413	.....
		02-02738		85012 or 89413	.....
		02-02741		85012 or 89413	.....
	Conventional Models with Spring Suspension and without Set Back Front Axle.	02-01787		85062 or 89408	.....
		02-02737		85062 or 89408	.....
		02-02742		85062 or 89408	.....
to Nov 82	Models with Air Trac Suspension	03-04176		.....	85308 or 89422
after Nov 82	Models with Air Trac Suspension	03-04629		.....	85311 or 89424
		03-07421		.....	85311 or 89424
	Models with Chalmers 40,000 lb Rear Suspension	665174		.....	85060
2001 & Up	Models with FlexAir Suspension (38000 lb)	C71-6000		.....	85067 or 89451
	Models with Neway ARD 125/244-8 Series Rear Air Suspension	90044011		.....	85004
	Models with Peterbilt Air Leaf Suspension (Early Style)	03-04176		.....	85308 or 89422
	Models with Peterbilt Air Leaf Suspension (New Style)	03-04629		.....	85311 or 89424
		03-07421		.....	85311 or 89424
	Models with Peterbilt Low Air Leaf Suspension	03-05384		.....	85033 or 89427
		03-06084		.....	85033 or 89427
		03-07423		.....	85033 or 89427
		665633		.....	85033 or 89427
	Models with Quadraflex 4 Spring Rear Suspension	03-07420		.....	85336

Gabriel Part Numbers that appear in BLUE are GasSLX, adjustable shocks.\ Los números de parte Gabriel imprimidos en AZUL son amortiguadores ajustables GasSLX. \ Les numéros de pièce Gabriel imprimés en BLEU sont des amortisseurs ajustables GasSLX.

Gabriel® COMMERCIAL VEHICLE

Year Año Année	Model Modelo Modèle	O.E.M. #	Mount	Front Delantero Avant	Rear Trasero Arrière

PETERBILT .. cont'd

387 Series

2001 & Up	Models with FlexAir Suspension (38000 lb)	C71-6000		.....	85067 or 89451
	Models with Peterbilt Air Leaf Suspension	03-04629		.....	85311 or 89424
		03-07421		.....	85311 or 89424
2003 &up	Models with Peterbilt Low Air Leaf Suspension	03-08781		.....	85069 or 89455
	Models with Peterbilt Low Air Leaf Suspension	03-05384		.....	85033 or 89427
		03-06084		.....	85033 or 89427
		03-07423		.....	85033 or 89427
		665633		.....	85033 or 89427
	Models with Spring Suspension and with Set Back Front Axle.	02-04010		85012 or 89413	.....

Additional Applications

	Models with Quadraflex 4 spring rear suspension	03-04628		.....	85336
		03-07420		.....	85336
	Models with O.E.M. Number	02-02225		85012 or 89413	.....
		03-01635		.....	85308 or 89422
		03-07424		.....	85311 or 89424
		23-08233		.....	85308 or 89422
		23-10393		.....	85308 or 89422
		23-12262		85012 or 89413	.....
		680026		.....	85302 or 89420
		680586		85311 or 89424	.....

PREVOST

	LeMirage XL 40 ft, 45 ft, & H Series Coaches with Independant Front Suspension	630136		85330	.....
	LeMirage XL 40 ft, 45 ft, & H3-45 VIP Coaches (Drive Axle)	630134		.....	85329
	LeMirage XL 40 ft, 45 ft, & H3-45 VIP Coaches (Tag Axle)	630134		.....	85329
	Models with O.E.M. Number	12T-1-13		85303 or 89422	85303 or 89422
	Additional O.E.M. Interchanges	01-0100-905		85303 or 89422	
		63-0001		85308 or 89422	
		63-0080		85713	
		63-0091		85736	
		63-1013		85329	
		690060		85713	
		74939852		85308 or 89422	

Gabriel Part Numbers that appear in BLUE are GasSLX, adjustable shocks.\ Los números de parte Gabriel imprimidos en AZUL son amortiguadores ajustables GasSLX. \
Les numéros de pièce Gabriel imprimés en BLEU sont des amortisseurs ajustables GasSLX.

Gabriel® COMMERCIAL VEHICLE

Year Año Année	Model Modelo Modèle	O.E.M. #	Mount	Front Delantero Avant	Rear Trasero Arrière
RAMERIZ TRAILER					
	Identification of the trailer suspension is necessary to determine what section of the catalog to refer to. Some possible options can be Chalmers, Hendrickson, Neway, Ridewell, Reyco.				
RAYDAN MANUFACTURING					
	AL460 Air Link Suspension	700115		.....	85712
	AL520 Air Link Suspension	700115		.....	85712
REINKE MANUFACTURING COMPANY, INC.					
	Identification of the trailer suspension is necessary to determine what section of the catalog to refer to. Some possible options can be Chalmers, Hendrickson, Neway, Ridewell, Reyco.				
REYCO SUSPENSION					
	Drive Axle				
	101A, 101AR	18166-01		.....	85704
	102	16725-01		.....	83221
	102AR (Hvy Duty)	18286-01		.....	89414
	102AR (Special)	17146-01		.....	83209 or 89414
	102AR (Standard)	12887-01		.....	85013 or 89414
		12887-02		.....	85013 or 89414
	102AR for Western Star	19824-01		.....	85006
	102AR-7	17794-01		.....	83215
	102AR-LM	19623-01		.....	83123 or 89405
	200 Series Air Suspension	20129-01		.....	85713
	21AR - 25000 LB Capacity	12887-01		.....	85013 or 89414
		12887-02		.....	85013 or 89414
	240AR Tractor Prem. Drive Axle	20126-01		.....	89440
	240AR Tractor Standard Drive Axle	20125-01		.....	85030 or 89440
	74AR - 30000 lb Capacity	12887-01		.....	85013 or 89414
		12887-02		.....	85013 or 89414
	79KB	16725-01		.....	83221
	AirGlide 400 Air Suspension	20129-01		.....	85713
	Steer Axle				
	1207	17403-01		85003 or 89411	.....
	1209 (Alternate)	17408-01		85005 or 89430	.....
	1209 1212	17358-01		85030 or 89440	.....
		19495-01		85030 or 89440	.....
	21B	14954-01		83217	.....

Gabriel Part Numbers that appear in BLUE are GasSLX, adjustable shocks.\ Los números de parte Gabriel imprimidos en AZUL son amortiguadores ajustables GasSLX. \ Les numéros de pièce Gabriel imprimés en BLEU sont des amortisseurs ajustables GasSLX.

Gabriel® COMMERCIAL VEHICLE

Year Año Année	Model Modelo Modèle	O.E.M. #	Mount	Front Delantero Avant	Rear Trasero Arrière

REYCO SUSPENSION .. cont'd

Trailer

	21B (Special)	18800-01		.....	85000 or 89436
	81C	12885-03		.....	85300 or 89419
	81LC	12885-01		.....	85300 or 89419
	81S	12885-03		.....	85300 or 89419
	86 AR / RS 1015, 1035, 3035 Slider Air Suspension	18165-01		.....	85006
	87 for Great Dane	18163-01		.....	83207 or 89407
		18164-01		.....	83122 or 89406
	87-14 (Rear Mount)	18146-01		.....	85313
	87-14, -17	16230-01		.....	85702
	87-14, -17 Slider	12885-01		.....	85300 or 89419
	87-6, 87-9	12885-01		.....	85300 or 89419
	87M-12	18146-01		.....	85313
	Models with O.E.M. Number	12887-02		.....	85013 or 89414
		16824-01		.....	85006
		17142-01		.....	85001 or 89410
		20960-01		.....	83204
		21497-01		.....	85005 or 89430
		23524-01		.....	85738
		23614-01		.....	85717
		24392-01		.....	85051
		24392-01		.....	85051
		700098-01		83203 or 89436	.....
		700098-03		85052	.....
		702135-01		.....	85045
		702136-01		.....	85052
		702209-01		.....	85014

	Additional O.E.M. Interchanges	23524-01		85738	

RIDEWELL CORPORATION

Bus and R.V. Air-Rides

	Mobile Home & RV with Air Suspension	AS563B		.....	83203 or 89436
		S6009B		.....	83203 or 89436

Gabriel Part Numbers that appear in BLUE are GasSLX, adjustable shocks.\ Los números de parte Gabriel imprimidos en AZUL son amortiguadores ajustables GasSLX. \
Les numéros de pièce Gabriel imprimés en BLEU sont des amortisseurs ajustables GasSLX.

Gabriel® COMMERCIAL VEHICLE

Year Año Année	Model Modelo Modèle	O.E.M. #	Mount	Front Delantero Avant	Rear Trasero Arrière

RIDEWELL CORPORATION .. cont'd

Trailer Air- Rides

	RAR-210				
	- With Double Convolution Spring	AS789B		.....	85014
	- With Double Convolution Spring	S5878B		.....	83207 or 89407
	- With Shock Absorber Bracket 2-1/2" Above Frame Rail	.....		.....	85006
	- With Shock Absorber Bracket 2-7/8" Above Lower Frame Rail	.....		.....	83207 or 89407
	- With Shock Absorber Bracket 3" Above Lower Frame Rail	.....		.....	85005 or 89430
	- With Shock Absorber Bracket Even With Underside of Frame	AS546B		.....	85006
	RAR-210 For Trailers with 25" Drop	1253069B000		.....	85005 or 89430
		AS30698		.....	85005 or 89430
		AS3069B		.....	85005 or 89430
	RAR-210 Tag Axle	AS563B		.....	83203 or 89436
		S6009B		.....	83203 or 89436
	RAR-221 Tag Axle	AS563B		.....	83203 or 89436
		AS789B		.....	85014
		S5878B		.....	83207 or 89407
		S6009B		.....	83203 or 89436
	RAR-221-11, 12, 13-USW Trailer with Shock Absorber and Hanger	AS563B		.....	83203 or 89436
		S6009B		.....	83203 or 89436
	RAR-221AS-11-USW, RAR-221AS-11-1-USW Trailer	1253069B000		.....	85005 or 89430
		AS30698		.....	85005 or 89430
		AS3069B		.....	85005 or 89430
	RAR-221AS-12-USW, RAR-221AS-12-1-USW Trailer	1250546B000		.....	85006
		AS546B		.....	85006
	RAR-240, RAR-240W (Mono Pivot Trailers with HD Air Suspension)	1270563B000		.....	85000 or 89436
		1270789B000		.....	85014
	Models with O.E.M. Number	1270563B003		.....	85934

Truck Air- Rides

	Pusher w/Axle Lift	AS563B		.....	83203 or 89436
		S6009B		.....	83203 or 89436
	RAD-221R Drive Axle	S2607B		.....	85702
		S5477B		.....	85307
	RD-202B Tandem Drive Axle	S5478B		.....	85307

Gabriel Part Numbers that appear in BLUE are GasSLX, adjustable shocks.\ Los números de parte Gabriel imprimidos en AZUL son amortiguadores ajustables GasSLX. \ Les numéros de pièce Gabriel imprimés en BLEU sont des amortisseurs ajustables GasSLX.

Gabriel® COMMERCIAL VEHICLE

Year Año Année	Model Modelo Modèle	O.E.M. #	Mount	Front Delantero Avant	Rear Trasero Arrière
RIDEWELL CORPORATION Truck Air- Rides .. cont'd					
	RSS-236, RSS-236R Self Steering Tag/Pusher Lift Axle (For 13000 lb & 16000 lb Capacity)	1253069B000		.....	85005 or 89430
		AS30698		.....	85005 or 89430
		AS3069B		.....	85005 or 89430
	RUA-220B-1-, 10, 10.5, 11, 11.5, 12, 12.5, 13 (Lift Tag Axle & Trailer Lift Suspension)	1250789B000		.....	85014
		AS789B000		.....	85014
	RUA-220B-1-, 7, 7.5, 8, 8.5, 9, 9.5, 10 (Lift Tag Axle & Trailer Lift Suspension)	1270563B000		.....	85000 or 89436
	Models with O.E.M. Number	1250563B000		.....	85000 or 89436
		1252607B000		.....	85702
		1253069B000		.....	85005 or 89430
		665267		.....	85029
		AS1894B		.....	.....
		AS575B		.....	85005 or 89430
		S4025B		.....	87001
		S5813B		.....	85704
		S7120B		.....	85304
		S7172B		.....	83207 or 89407
		S7249B		.....	85307
		S7365B		.....	85305
	Additional O.E.M. Interchanges	1250005		85901	
		1254025B000		85712	
SICARD					
	Models with O.E.M. Number	3166657		85700	85700
SOUTHERN COACH					
	Early Model Air Suspension	.....		85304	85304
	Late Model Air Suspension	.....		83217	83217
	U.S. Army Coaches	.....		83217	83217
SPARTAN MOTORS					
	Fire Truck	0272-SS5		85712	.....
1986	Fire Truck with Ridewell Front Suspension	AS 4025B		85734	.....
	Models with O.E.M. Number	59011		83214	.....
	Additional O.E.M. Interchanges	78068		85304	
STERLING TRUCK					
	A - Line 9500 Series (SilverStar)				
1998-	A9513, A9522, AT9513, AT9522 (113" & 122" BBC) Series with 8500 or 9000 lb Axle and 54" Taperleaf Spring	F6HT-18045-HB		85054 or 89438	.....
		F6HT-18045-HC		85054 or 89438	.....
1998-	A9513, A9522, AT9513, AT9522 (113" & 122" BBC) Series with 8500, 9000 or 10000 lb Axle and 54" Multileaf Spring	F6HT-18045-KA		83200	.....
1998-	All Models with 10000 lb or 12000 lb Axle and 54" Taperleaf Spring	F6HT-18045-AC		85054 or 89438	.....

Gabriel Part Numbers that appear in BLUE are GasSLX, adjustable shocks.\ Los números de parte Gabriel imprimidos en AZUL son amortiguadores ajustables GasSLX. \ Les numéros de pièce Gabriel imprimés en BLEU sont des amortisseurs ajustables GasSLX.

Gabriel® COMMERCIAL VEHICLE

Year Año Année	Model Modelo Modèle	O.E.M. #	Mount	Front Delantero Avant	Rear Trasero Arrière
STERLING TRUCK A - Line 9500 Series (SilverStar) .. cont'd					
1998-	All Models with 12000 lb or 13200 lb Axle and 54" Multileaf Spring	F6HT-18045-BC		85047 or 89435	.....
1998-	All Models with 12000 lb, 13200 lb or 14600 lb Axle and 60" Taperleaf Spring	F6HT-18045-EB F6HT-18045-EC		85055 or 89439 85055 or 89439	....
1998-	All Models with 13200 lb or 14600 lb Axle and 54" Taperleaf Spring	F6HT-18045-GC		85030 or 89440	.....
1998-	All Models with 14600 lb or 16000 lb Axle and 54"Multi-leaf Spring	F6HT-18045-CC		85055 or 89439	.....
1998-	All Models with 23000 lb Axle and 52" Taperleaf Softride Rear Suspension	F6HT-18080-CA		.....	85314 or 89425
1998-	All Models with FAS II Rear Air Suspension	.....		.....	85724 or 89443
1998-	All Models with Hendrickson 40LH Tandem Axle	57241-2		.....	83109
1998-	All Models with Hendrickson HAS Rear Air Suspension	47902-28 F6HT-18080-FC		....	85013 or 89414 85013 or 89414
1999 -	Models with FAS II Rear Air Suspension	16-15817-000		.....	85724 or 89443
ACTERRA					
	Models with 11000 to 12000 lb Front axle	6803230300		85006	.....
	Models with 15000 lb Rear Suspension	6803260000		.....	83120
	Models with 6000 to 9000 lb Front axle	6803230200		85043	.....
Cargo Line					
1998	SC-7000 or SC-8000 Series with 12000 or 13000 lb. Axles	F6HT-18045-LA		85376	.....
1998	SC-7000 or SC-8000 Series with 16000 lb. Multileaf Spring	F6HT-18045-AA		85054 or 89438	.....
L - Line 7500 Series - Short Haul Tractor					
	Models with 10000 lb Front Axle	F6HT-18045-KA		83200	.....
L - Line 8500 Series - Conventional Cab					
1998	All Models with 10000 lb or 12000 lb Axle and 54" Taperleaf Spring	F6HT-18045-AC		85054 or 89438	.....
1998-	All Models with 12000 lb or 13200 lb Axle and 54" Multileaf Spring	F6HT-18045-BC		85047 or 89435	.....
1998-	All Models with 12000 lb, 13200 lb or 14600 lb Axle and 60" Taperleaf Spring	F6HT-18045-EB F6HT-18045-EC		85055 or 89439 85055 or 89439	....
1998-	All Models with 13200 lb or 14600 lb Axle and 54" Taperleaf Spring	F6HT-18045-GC		85030 or 89440	.....
1998-	All Models with 14600 lb or 16000 lb Axle and 54"Multi-leaf Spring	F6HT-18045-CC		85055 or 89439	.....
1998-	All Models with 23000 lb Axle and 52" Taperleaf Softride Rear Suspension	F6HT-18080-CA		.....	85314 or 89425
1998	All with Hendrickson HAS Rear Air Suspension	47902-28 F6HT-18080-FC		....	85013 or 89414 85013 or 89414
1998	LT-8000 Series with 12000 or 13000 lb Axles	F6HT-18045-LA		85376	.....

Gabriel Part Numbers that appear in BLUE are GasSLX, adjustable shocks.\ Los números de parte Gabriel imprimidos en AZUL son amortiguadores ajustables GasSLX. \ Les numéros de pièce Gabriel imprimés en BLEU sont des amortisseurs ajustables GasSLX.

Gabriel® COMMERCIAL VEHICLE

Year Año Année	Model Modelo Modèle	O.E.M. #	Mount	Front Delantero Avant	Rear Trasero Arrière

STERLING TRUCK L - Line 8500 Series - Conventional Cab .. cont'd

1998	LT-8000 Series with 16000 lb. Multileaf Spring	F6HT-18045-AA		85054 or 89438	.....
1998	LT-8501 (101" BBC) Series with 8500 or 9000 lb Axle and 54" Multileaf Spring	F6HT-18045-JB		83200	.....
		F6HT-18045-JC		83200	.....
	LT-8501 (101" BBC) Series with 8500 or 9000 lb Axle and 54" Taperleaf Spring	F6HT-18045-HB		85054 or 89438	.....
		F6HT-18045-HC		85054 or 89438	.....
1998	Models with FAS II Rear Air Suspension	.....		.....	85724 or 89443
		16-15817-000		.....	85724 or 89443
1998	Models with Hendrickson 40LH Tandem Axle	57241-2		.....	83109

L - Line 9500 Series - Conventional Cab

1998	All Models with 10000 lb or 12000 lb Axle and 54" Taperleaf Spring	F6HT-18045-AC		85054 or 89438	.....
1998-	All Models with 12000 lb or 13200 lb Axle and 54" Multileaf Spring	F6HT-18045-BC		85047 or 89435	.....
1998-	All Models with 12000 lb, 13200 lb or 14600 lb Axle and 60" Taperleaf Spring	F6HT-18045-EB		85055 or 89439	.....
		F6HT-18045-EC		85055 or 89439	.....
1998-	All Models with 13200 lb or 14600 lb Axle and 54" Taperleaf Spring	F6HT-18045-GC		85030 or 89440	.....
1998-	All Models with 14600 lb or 16000 lb Axle and 54"Multi-leaf Spring	F6HT-18045-CC		85055 or 89439	.....
1998-	All with 23000 lb Axle and 52" Taperleaf Softride Rear Suspension	F6HT-18080-CA		.....	85314 or 89425
1998-	All with Hendrickson HAS Rear Air Suspension	47902-28		.....	85013 or 89414
		F6HT-18080-FC		.....	85013 or 89414
1998-	LT-9501, LT-9511, LT-9513 or LT-9513 (113" & 122" BBC) Series with 8500 or 9000 lb Axle and 54" Multileaf Spring	F6HT-18045-JB		83200	.....
		F6HT-18045-JC		83200	.....
1998-	LT-9501, LT-9511, LT-9513 or LT-9513 (113" & 122" BBC) Series with 8500 or 9000 lb Axle and 54" Taperleaf Spring	F6HT-18045-HB		85054 or 89438	.....
		F6HT-18045-HC		85054 or 89438	.....
1998-	Models with FAS II Rear Air Suspension	.....		.....	85724 or 89443
1998-	Models with Hendrickson 40LH Tandem Axle	57241-2		.....	83109

	Models with FAS II Rear Air Suspension	XC45-18080-BA		.....	85724 or 89443
	Models with O.E.M. Number	AT-560		G61150	.....
		AX267A		83309 or 89446	.....
		AX310		.....	83215
		C4HZ-18124-E		83309 or 89446	.....
		C4TZ-18124-AB		83308 or 89435	.....
		D8HZ-18124-A		85301	.....
		E6HZ-18124-A		85301	.....

Gabriel Part Numbers that appear in BLUE are GasSLX, adjustable shocks.\ Los números de parte Gabriel imprimidos en AZUL son amortiguadores ajustables GasSLX. \ Les numéros de pièce Gabriel imprimés en BLEU sont des amortisseurs ajustables GasSLX.

Gabriel® COMMERCIAL VEHICLE

STERLING TRUCK .. cont'd

Year Año Année	Model Modelo Modèle	O.E.M. #	Mount	Front Delantero Avant	Rear Trasero Arrière
	Models with O.E.M. Number	E6HZ-18124-D		85301	.....
		E6HZ-18125-D		.....	83215
		E7HZ-18124-A		85301	.....
		E7XZ-18124-A		G60023	.....
		E7XZ-18125-B		.....	G60024
		E9HZ-18124-A		83309 or 89446	.....
		F0HZ-18124-B		85006	.....
		F1HZ-18124-A		83309 or 89446	.....
		F1HZ-18124-B		83308	.....
		F1HZ-18124-D		85006 or 89401	.....
		F1HZ-18124-E		85006 or 89401	.....
		F1HZ-18124-H		85040	.....
		F1HZ-18124-J		83308	.....
		F1HZ-18124-K		89402	.....
		F2HZ-18124-A		85376	.....
		F2HZ-18124-B		85301	.....
		F5HZ-18124-A		83314	.....
		F5HZ-18124-B		83107	.....
		F5HZ-18124-C		85063	.....
		F5HZ-18124-D		83125	.....
		F5HZ-18125-A		.....	85314 or 89425
		F5HZ-18125-B		.....	85001 or 89410
		F6HT-18080-FC		.....	85013 or 89414
		F6HT-18124-JC		83200	.....
		F6HT-18124-KA		83200	.....
		F6HZ-18124-A		85054 or 89438	.....
		F6HZ-18124-B		83308 or 89435	.....
		F6HZ-18124-C		85055 or 89439	.....
		F6HZ-18124-D		85055 or 89439	.....
		F6HZ-18124-E		85055 or 89439	.....
		F6HZ-18124-F		85055 or 89439	.....
		F6HZ-18124-G		85054 or 89438	.....
		F6HZ-18124-H		85054 or 89438	.....
		F6HZ-18124-J		83200	.....
		F6HZ-18125-B		.....	83109
		F6HZ-18125-D		.....	85013 or 89414
		F81A-18045-AGB		G61150	.....

Gabriel Part Numbers that appear in BLUE are GasSLX, adjustable shocks.\ Los números de parte Gabriel imprimidos en AZUL son amortiguadores ajustables GasSLX. \ Les numéros de pièce Gabriel imprimés en BLEU sont des amortisseurs ajustables GasSLX.

Gabriel COMMERCIAL VEHICLE

Year Año Année	Model Modelo Modèle	O.E.M. #	Mount	Front Delantero Avant	Rear Trasero Arrière
STOUGHTON TRAILERS INC.					
	Trailers with Hendrickson HT190T, HT190U, & HS190T Series Air Suspension	HTA20001		.....	85000 or 89436
	Trailers with Hendrickson HT230T Series Air Suspension	HTA20002		.....	85000 or 89436
	Trailers with Neway AR-90-1-12, -14, -17 Series Air Suspension	NW90044162		.....	83128
	Trailers with Neway AR-90-1-15, -16 Series Air Suspension	NW90044448		.....	85051
	Trailers with Neway RL-196-14, -15, Series Air Suspension	NW90044978		.....	85059
	Trailers with Neway RL-196-16, -17, Series Air Suspension	NW90044979		.....	83113
	Trailers with Reyco 86AR/RS1015 Air Ride Suspension	RT18165-01		.....	85006
	Trailers with Reyco 86AR/RS1035 Anti-Dock Walk Air Suspension	RT18165-01		.....	85006
THOMAS SCHOOL BUS					
	Model MVP	61310101		85736	85736
	Models with Neway Tandem Air Suspension	61310232		.....	85000 or 89436
	Models with Oshkosh Chassis & O.E.M. Number	P101977		.....	85010
	ROC Front, SAF-T-Liner	61300285		83102	.....
	School Bus	614966		.....	85307
		614974		85304	.....
		680010		85304	.....
		680054		.....	85307
	Models with O.E.M. Number	61300112		83613	.....
		61310102		.....	85308 or 89422
		61310103		.....	85308 or 89422
		651442		83102	.....
	Additional O.E.M. Interchanges	6130-0114		89437	
		6130029		85712	
		61310104		85713	
		63-0001		85308 or 89422	
		680088		85713	
		728802		85736	
		A-4890		85712	
TIMBREN INDUSTRIES					
	Additional O.E.M. Interchanges	665804		85939	
TRAIL KING INDUSTRIES					
	Identification of the trailer suspension is necessary to determine what section of the catalog to refer to. Some possible options can be Chalmers, Hendrickson, Neway, Ridewell, Reyco.				
TRAILMOBILE CANADA CORP.					
	Trailers with Granning Air Susp. T-350A	43-8-022		.....	83225
	Trailers with Hendrickson Air Susp. HT230T (23,000 lb Capacity)	43-6-118		.....	85000 or 89436
	Trailers with Hendrickson Air Susp. HT250U, HT250U-Y	A-2212		.....	85029
	Trailers with Hendrickson Air Susp. T23-RL-17	43-8-011		.....	83207 or 89407
	Trailers with Hendrickson Air Susp. T23-US-6 (Non-Liftable)	43-8-015		.....	85006
	Trailers with Hendrickson Air Susp. T23-US-9 (Liftable & Non-Liftable)	43-8-014		.....	85013 or 89414

Gabriel Part Numbers that appear in BLUE are GasSLX, adjustable shocks.\ Los números de parte Gabriel imprimidos en AZUL son amortiguadores ajustables GasSLX. \ Les numéros de pièce Gabriel imprimés en BLEU sont des amortisseurs ajustables GasSLX.

Gabriel® COMMERCIAL VEHICLE

Year Año Année	Model Modelo Modèle	O.E.M. #	Mount	Front Delantero Avant	Rear Trasero Arrière
TRAILMOBILE CANADA CORP. .. cont'd					
	Trailers with Hendrickson Air Susp. T30-US-9, -12, -14, -17	43-8-013		.....	85000 or 89436
	Trailers with Neway Air Susp. AR90-1-14, AR90-1-17	90044089		.....	83124 or 89407
	Trailers with Neway Air Susp. AR90-14, -17,	90044089		.....	83124 or 89407
	Trailers with Neway Air Susp. AR92-14	90044992		.....	85000 or 89436
	Trailers with Neway Air Susp. AR92-17	90044642		.....	83127
	Trailers with Neway Air Susp. AR93-14	90045054		.....	85051
	Trailers with Neway Air Susp. AR93-17	90044089		.....	83124 or 89407
	Trailers with Neway Air Susp. AR95-9-HD, -12-HD,-14-HD, 17-HD	90044625		.....	83125
	Trailers with Neway Air Susp. RL196-12	90044977		.....	83115
	Trailers with Neway Air Susp. RL196-14, -15	90044978		.....	85059
	Trailers with Neway Air Susp. RL196-16, -17	90044979		.....	83113
	Trailers with Reyco Air Susp. Model # 21AR (25,000 LB Capacity)	43-8-002		.....	83209 or 89414
	Trailers with Reyco Air Susp. Model # 74AR (30,000 LB Capacity)	43-8-002		.....	83209 or 89414
	Trailers with Reyco Air Susp. Model # 86AR	43-8-015		.....	85006
	Additional O.E.M. Interchanges	43-4-235		85051	
		43-4-236		85029	
		43-4-237		85000 or 89436	
		43-4-239		83207 or 89407	
		43-4-241		85006	
		43-4-277		85000 or 89436	
		43-4-278		85059	
		43-4-279		83204	
		43-6-028		85000 or 89436	
		43-6-118		85000 or 89436	
		43-6-137		85006	
		43-6-158		85013 or 89414	
		43-6-164		83207 or 89407	
		43-8-002		83209 or 89414	
		43-8-011		83207 or 89407	
		43-8-013		85000 or 89436	
		43-8-014		85013 or 89414	
		43-8-015		85006	
		43-8-022		83225	
		43-8-031		85029	
TRANSPORTATION MFG. CORP					
	City Cruiser	12TA-01-13		85303 or 89422	85303 or 89422
	Drive Axle	12J-5-10		.....	85733
		12J-5-2		.....	85312
		12J-5-4		.....	85312
	RTS Bus with "V" Drive Rear	G1101590		.....	85713
	RTS Bus with Normal Front	22012079		85701	.....
		4975515		85701	.....
		695117		85701	.....
		74410		85701	.....

Gabriel Part Numbers that appear in BLUE are GasSLX, adjustable shocks.\ Los números de parte Gabriel imprimidos en AZUL son amortiguadores ajustables GasSLX. \ Les numéros de pièce Gabriel imprimés en BLEU sont des amortisseurs ajustables GasSLX.

Gabriel® COMMERCIAL VEHICLE

Year Año Année	Model Modelo Modèle	O.E.M. #	Mount	Front Delantero Avant	Rear Trasero Arrière
TRANSPORTATION MFG. CORP .. cont'd					
	RTS Bus with Regular Rear	22045526		.....	85702
		22052014		.....	85702
		G1011822		.....	85702
	RTS Bus with Solid Front Axle	22024673		85710	.....
		22046485		85710	.....
		680350		85710	.....
		695273		85710	.....
		695279		85710	.....
	Tag Axle	12J-5-11		.....	85313
		12J-5-3		.....	85313
		12J-5-6		.....	85313
		12J-5-9		85700	.....
	Models with O.E.M. Number	12B-5-1		.....	85700
		12G-5-1		85700	.....
		22046485		85710	.....
		680349		.....	85702
	Additional O.E.M. Interchanges	12L-5-69		85700	
		12L-5-70		85700	
		680470		85713	
TRINITY TRAILER MFG., INC.					
	Identification of the trailer suspension is necessary to determine what section of the catalog to refer to. Some possible options can be Chalmers, Hendrickson, Neway, Ridewell, Reyco.				
TURNER- QUICK LIFT - see HENDRICKSON SUSPENSION					
TWIN COACH					
	Models with O.E.M. Number	90044089		.....	83124 or 89407
		90044089C		.....	83124 or 89407
		90044162		.....	83128
		AR-718-C-HD		.....	85000 or 89436
		AR-958		.....	83207 or 89407
UNITED MANUFACTURING					
	Models with O.E.M. Number	K-96-41		.....	85304
UTILITY TRAILER					
	Identification of the trailer suspension is necessary to determine what section of the catalog to refer to. Some possible options can be Chalmers, Hendrickson, Neway, Ridewell, Reyco.				
VOLVO- AUTOCAR					
	A42B, A42F, A64B A64F				
	- From Feb. 1971	03-1106460		85005 or 89430	.....
	- Thru Jan. 1971	28R010		83216	.....
	ACM, ACL Models	35901-3201		.....	85024 or 89416
		37301-3201		85027 or 89418	.....

Gabriel Part Numbers that appear in BLUE are GasSLX, adjustable shocks.\ Los números de parte Gabriel imprimidos en AZUL son amortiguadores ajustables GasSLX. \ Les numéros de pièce Gabriel imprimés en BLEU sont des amortisseurs ajustables GasSLX.

Gabriel® COMMERCIAL VEHICLE

Year Año Année	Model Modelo Modèle	O.E.M. #	Mount	Front Delantero Avant	Rear Trasero Arrière
VOLVO- AUTOCAR .. cont'd					
	C65T, C70T, C70TS, C90, C75, C90T, DC74, DC75, DC102, DC104	.....		83216	.....
	DC87T, DC9364 From Feb. 1971	.....		83122 or 89406	.....
	Models with Air Suspension and O.E.M. Number	8026658		.....	85046 or 89434
		8071524		.....	85024 or 89416
	Models with O.E.M. Number	1011839		83216	.....
		28CFG-910		83216	.....
		37301-3202		85026 or 89417	.....
		660186		83216	.....
		849246		83216	.....
VOLVO					
FE Series					
	FE6 Series	6857668		83105	.....
		6876828		83105	.....
	FE611, FE614	6876831		.....	.....
	FE611, FE614 Front after CH419306	6794358		85040	.....
	FE614 Tractor	6790756		.....	83215
		6794358		85040	.....
	FE615, FE715	6772218		85040	.....
		6775412		85040	.....
	FE7 Series up to Chassis No. 20855	1505190		.....	85722
	FE7 Series with over 6.5 Front Axle (Ton)	1590439		83104	.....
	FE7 Series with Rear Air Suspension (Drive Axle)	1591501		.....	85722
	FE715 with Rear Parabolic Spring	6790756		.....	83215
	Models with Rear Air Suspension and O.E.M. Number	8056892		.....	85023 or 89415
N Series					
	N10 with 5.5 Ton Front Axle	1593843		83215	.....
	N11 Series	1-0200-32-888-1		83104	.....
		1591735		83104	.....
		1593843		83215	.....
	N12 Series	1-0200-32-888-1		83104	.....
		1591735		83104	.....
		1593843		83215	.....
	N12 with over 6.5 Ton Front Axle	1590439		83104	.....
VN Series - 2200					
May 99-	Models built after May 1999	20433425		.....	85066 or 89448
		8086651		.....	85066 or 89448

Gabriel Part Numbers that appear in BLUE are GasSLX, adjustable shocks.\ Los números de parte Gabriel imprimidos en AZUL son amortiguadores ajustables GasSLX. \ Les numéros de pièce Gabriel imprimés en BLEU sont des amortisseurs ajustables GasSLX.

Gabriel® COMMERCIAL VEHICLE

Year Año Année	Model Modelo Modèle	O.E.M. #	Mount	Front Delantero Avant	Rear Trasero Arrière
	VOLVO VN Series - 2200 .. cont'd				
	Models with O.E.M. Number	20433424		85061 or 89450	.....
		20513881		85061 or 89450	.....
		20551628		.....	85066 or 89448
		8077874-P01		.....	85047 or 89435
		8078195		85061 or 89450	.....
		8086053		.....	85047 or 89435
		8169859		.....	85047 or 89435
	Vocational Trucks				
	Models with T-Ride Rear Suspension	20433427		.....	85065
		8060026		.....	85065
		8073212		.....	85065
		8075257		.....	85065
	WX, WXR, WG, AC Series with Hendrickson HN-402 Rear Suspension	57241-3		.....	83112
	WX, WXLL, WXR, WG, AC Series				
	- With Hendrickson HAS-400 Rear Air Suspension	47902-24		.....	83121
	- With Hendrickson HAS-460 Rear Air Suspension	47902-24		.....	83121
	- With Hendrickson HN-462 Rear Suspension	57241-3		.....	83112
	WCA & WIA Series				
1995-	All with O.E.M. Number and after V.I.N. Number 723506	8169859		.....	85047 or 89435
	Models with Front Dual Shocks	02-7005976		83400	.....
		3082284		83400	.....
1993-95	Models with O.E.M. Number and after V.I.N. Number 657841	8026658		.....	85046 or 89434
-1992	Models with O.E.M. Number and up to V.I.N. Number 657250	8071524		.....	85024 or 89416
-1993	Models with O.E.M. Number	37301-3201		85027 or 89418	.....
		37301-3202		85026 or 89417	.....
	Models with O.E.M. Number	37301-0016		85026 or 89417	.....
		37301-0021		85026 or 89417	.....
		4975549		83216	.....
		8065787		85026 or 89417	.....
	WG Series				
1993-95	Models with O.E.M. Number	8026658		.....	85046 or 89434
-1992	Models with O.E.M. Number	8065787		85026 or 89417	.....
		8071524		.....	85024 or 89416

Gabriel Part Numbers that appear in BLUE are GasSLX, adjustable shocks.\ Los números de parte Gabriel imprimidos en AZUL son amortiguadores ajustables GasSLX. \
Les numéros de pièce Gabriel imprimés en BLEU sont des amortisseurs ajustables GasSLX.

Gabriel® COMMERCIAL VEHICLE

Year Año Année	Model Modelo Modèle	O.E.M. #	Mount	Front Delantero Avant	Rear Trasero Arrière
	VOLVO WG Series .. cont'd				
	Models with O.E.M. Number	35901-3201		.....	85024 or 89416
		37301-3201		85027 or 89418	.....
	WH Series				
	WHS, WHR, WHL or WHE Models with Front Dual Shocks	02-7005976		83400	.....
		3082284		83400	.....
	WHS, WHR, WHL or WHE Models with Front Single Shocks	37301-0021		85026 or 89417	.....
1993-95	WHS, WHR, WHL or WHE Models with O.E.M. Number	8026658		.....	85046 or 89434
-1992	WHS, WHR, WHL or WHE Models with O.E.M. Number	35901-3201		.....	85024 or 89416
		8071524		.....	85024 or 89416
1995-	WHS, WHR, WHL or WHE Models with O.E.M. Number	8169859		.....	85047 or 89435
	Additional Series				
	1500 Series	.....		83122 or 89406	83122 or 89406
	- Models with Rear Suspension	35901-0005		.....	83219
	- Models with Velvet Ride Suspension	530596		.....	85308 or 89422
	3000, 4000 & 9000 Series - Special Unit - Four Shock Absorbers Required Per Axle	5554959		83401	.....
		676081		83401	.....
		676082		83401	.....
	3014, 3015, 3016, 3020 C.O.E. and 1500	.....		83122 or 89406	.....
	9000 Series	.....		83122 or 89406	.....
	Brigadier Series	22012065		85304	.....
		22046483		85304	.....
		22052336		85304	.....
1978-83	RC2	.....		.....	83122 or 89406
	Road Boss, Road Boss II, Road Commander II, Road Expeditor - (Four Shocks per Axle)	3946210		83103	.....
	Road Boss, Road Boss II, Road Commander, Road Commander II, Road Expeditor II - (Four Shocks per Axle)	02-7005976		83400	.....
		02-7005977		83400	.....
		4975479		83400	.....
		4975480		83400	.....
	Models with O.E.M. Number	35901-0001		.....	83209 or 89414
		35901-0008		.....	85060
		37301-0008		83400	.....
		8169859		.....	85047 or 89435
		8174749		.....	85906

Gabriel Part Numbers that appear in BLUE are GasSLX, adjustable shocks.\ Los números de parte Gabriel imprimidos en AZUL son amortiguadores ajustables GasSLX. \ Les numéros de pièce Gabriel imprimés en BLEU sont des amortisseurs ajustables GasSLX.

Gabriel® COMMERCIAL VEHICLE

Year Año Année	Model Modelo Modèle	O.E.M. #	Mount	Front Delantero Avant	Rear Trasero Arrière

VOLVO AdditionalSeries .. cont'd

	Additional O.E.M. Interchanges	03-1106460		85005 or 89430	
		35901-0003		85301	
		35901-0004		83219	
		35901-0011		83123 or 89405	
		35901-0017		83314	
		35901-0022		83635	
		35901-3406		85305	
		35901-3409		85304	
		35901-3410		85307	
		35901-3413		85006	
		35901-3420		85303	
		37001-5		83401	
		37301-0001		85013 or 89414	
		37301-0018		85005 or 89430	
		37301-0020		.....	
		3953643		85040	
		4940640		83216	
		494-660		83219	
		5322338		83214	
		5513989		83216	
		5531435		85307	
		5531436		85307	
		5531437		85307	
		5534430		85303	
		5534447		85303	
		5549925		85304	
		629398		85307	
		629501		85307	
		646220		85734	
		66010-0016		85025	
		668302		83216	
		6771501		85040	
		6775411		85040	
		8061167		.....	

Additional Volvo PDC Numbers

	Models with O.E.M. Number	20433424		85061 or 89450	.....
		3092842		85061 or 89450	.....
		3919958		.....	85046 or 89434
		3949241		85061 or 89450	.....
	Additional O.E.M. Interchanges	1091347		83125	
		1091348		83122 or 89406	
		1091349		83204	
		1091350		83207 or 89407	
		1091351		83209 or 89414	
		1091353		83215	
		1091354		83216	
		1091355		83217	
		1091357		83219	
		1091358		83456 or 89447	
		1091359		83123 or 89405	

Gabriel Part Numbers that appear in BLUE are GasSLX, adjustable shocks.\ Los números de parte Gabriel imprimidos en AZUL son amortiguadores ajustables GasSLX. \
Les numéros de pièce Gabriel imprimés en BLEU sont des amortisseurs ajustables GasSLX.

Gabriel® COMMERCIAL VEHICLE

Year Año Année	Model Modelo Modèle	O.E.M. #	Mount	Front Delantero Avant	Rear Trasero Arrière

VOLVO Additional Volvo PDC Numbers .. cont'd

	Additional O.E.M. Interchanges	1091359		83123 or 89405	
		1091360		83303	
		1091361		83304	
		1091362		83309 or 89446	
		1091363		83221	
		1091364		83312 or 89409	
		1091365		83400	
		1091366		83401	
		1091367		85000 or 89436	
		1091368		85003 or 89411	
		1091370		85006	
		1091371		85300 or 89419	
		1091372		85301	
		1091373		85302 or 89420	
		1091374		85303	
		1091375		85304	
		1091376		85305	
		1091377		85307	
		1091378		85308 or 89422	
		1091379		85310 or 89423	
		1091384		85735	
		1093100		85027 or 89418	
		1093174		83353	
		1093176		85024 or 89416	
		1093177		85025	
		1093178		85026 or 89417	
		1093180		85030 or 89440	
		1716824		85304	
		20551628		85066 or 89448	
		3130140		85315	
		3171696		85307	
		3172948		85303	
		3915917		85319 or 89428	
		3915947		85001 or 89410	
		3915948		85311 or 89424	
		3916352		85013 or 89414	
		3919055		85007 or 89412	
		3919056		83203 or 89436	
		3919057		83225	
		3919526		83314	
		3919561		85314 or 89425	
		3919585		83209 or 89414	
		3919588		83216	
		3919964		85304	
		3945806		89417	
		3945807		89416	
		3945808		89407	
		3945809		89410	
		3945810		89420	
		3945811		89409	
		3945812		89423	
		3945813		89428	
		3945814		89424	
		3945815		89406	

Gabriel Part Numbers that appear in BLUE are GasSLX, adjustable shocks.\ Los números de parte Gabriel imprimidos en AZUL son amortiguadores ajustables GasSLX. \ Les numéros de pièce Gabriel imprimés en BLEU sont des amortisseurs ajustables GasSLX.

Gabriel® COMMERCIAL VEHICLE

Year Año Année	Model Modelo Modèle	O.E.M. #	Mount	Front Delantero Avant	Rear Trasero Arrière
	VOLVO Additional Volvo PDC Numbers .. cont'd				
	Additional O.E.M. Interchanges	3945816		89430	
		3945817		89422	
		3945818		89415	
		3945819		89411	
		3945820		89413	
		3945821		89419	
		3946219		83400	
	Models with Hendrickson Airtek	20485633		85933 or 89454	.....
		64838-001		85933 or 89454	.....
		64838-002		85933 or 89454	.....
	WABASH TRAILER				
1997-	RHP11, RHP55 and RideSentry Trailer Suspension	202447		.....	85919
		203447		.....	85919
	WATSON & CHALIN MFG. INC.				
	Heavy Duty Trailer Air Suspension				
	TA-2590-14, 17 HD	10148		.....	83204
	TA-3090-14, -17, -19	10148		.....	83204
	TA-550-17	10148		.....	83204
	Light Weight Trailer Air Suspension				
	TA-3175-9	17079		.....	85300 or 89419
	TA-751-16	10148		.....	83204
	LWSL-1100-SR Self Steer Axle Suspension				
	AL-1100-SR	10148		.....	83204
	HL-1100-20	10148		.....	83204
	HL-1100-20 FL	10147		.....	83203 or 89436
	SL-1100-LR	12128		.....	85005 or 89430
	Trailer Air Suspension				
	TA-2590-12, 14, 15, & 17,	12128		.....	85005 or 89430
	TA-2590-12-1	10147		.....	83203 or 89436
	WCAL-2200 Series Pusher or Tag Axle Assembly				
	AL-2200	10148		.....	83204
	WCTA Series Dump Trailer Air Suspension				
	TA-1600-21	11604		.....	83125
	TA-1900-15	10147		.....	83203 or 89436
	TA-1900-16, -17	10148		.....	83204

Gabriel Part Numbers that appear in BLUE are GasSLX, adjustable shocks.\ Los números de parte Gabriel imprimidos en AZUL son amortiguadores ajustables GasSLX. \
Les numéros de pièce Gabriel imprimés en BLEU sont des amortisseurs ajustables GasSLX.

Gabriel® COMMERCIAL VEHICLE

Year Año Année	Model Modelo Modèle	O.E.M. #	Mount	Front Delantero Avant	Rear Trasero Arrière
WATSON & CHALIN MFG. INC. WCTA Series Dump Trailer Air Suspension .. cont'd					
	TA-1900-18, -19	12128		.....	85005 or 89430
	TA-5000-DB-19, -F-19	12128		.....	85005 or 89430
	TA-5000-DB-24, -DB-30, -F-24, -F-30,	11724		.....	83123 or 89405
	TA-525, -DB	10147		.....	83203 or 89436
WCTA Series Trailer Air Suspension					
	TA-2075-6	10148		.....	83204
	TA-2075-9	12128		.....	85005 or 89430
	TA-250-12	10148		.....	83204
	TA-250-6, 7.5, 9,	10147		.....	83203 or 89436
	TA-251-12, -12FS,	10148		.....	83204
	TA-251-6.5, -6.5FS,	10147		.....	83203 or 89436
	TA-251-7.5, -7.5FS	10147		.....	83203 or 89436
	TA-251-8FS	10147		.....	83203 or 89436
	TA-251-9.0, -9.0FS, -10,	10147		.....	83203 or 89436
	TA-255-9	10147		.....	83203 or 89436
	TA-280-6.5, 7.5, -9.0,	11604		.....	83125
	TA-300-9	10147		.....	83203 or 89436
	TA-380-9	12128		.....	85005 or 89430
WCTA-1200 Series Trailer Air Suspension					
	TA-1000	10634		.....	.....
	TA-1200-5	10147		.....	83203 or 89436
WCTL-2200 Series Trailer Air Lift					
	TL-1600-21	11604		.....	83125
Oct 89 -	TL-2590-12,14,15, & 17	12128		.....	85005 or 89430
WCWB Series Trailer Air Suspension					
	WB-2500-6	10148		.....	83204
	WB-2500-7.5, -9,	12128		.....	85005 or 89430
	WB-251-6.5, 7.5, 9	10147		.....	83203 or 89436
	WB-280-9	11604		.....	83125
	Models with O.E.M. Number	17297 17300		....	85938 85052
	Additional O.E.M. Interchanges	3946219 665727		83400 85005 or 89430	

Gabriel Part Numbers that appear in BLUE are GasSLX, adjustable shocks.\ Los números de parte Gabriel imprimidos en AZUL son amortiguadores ajustables GasSLX. \ Les numéros de pièce Gabriel imprimés en BLEU sont des amortisseurs ajustables GasSLX.

Gabriel COMMERCIAL VEHICLE

Year Año Année	Model Modelo Modèle	O.E.M. #	Mount	Front Delantero Avant	Rear Trasero Arrière

WATSON & CHALIN MFG. INC. .. cont'd

	Models with O.E.M. Number	10147HD		85000 or 89436	.....
	Additional O.E.M. Interchanges	17186-01		85323 or 89436	
		17306		85938	

WESTERN STAR

3800 Series - Heritage Class

	3842S, 3864S	37390-4401		85053 or 89442	.....
		37390-4402		85053 or 89442	.....
		37390-4403		85053 or 89442	.....
	With Hendrickson Rear Suspension	47902-13		.....	83122 or 89406
		47902-24		.....	83121
		47902-8		.....	83122 or 89406
	With Neway Rear Suspension	90044025		.....	83209 or 89414
		90044907		.....	83635

4800 & 4900 Series - Constellation Class

	4842FX, 4864FX, 4964EX, 4964EX, 4942SX or 4964SX Constellation Class	37301-3401		85053 or 89442	.....
		37301-3404		85053 or 89442	.....
		37301-3409		85053 or 89442	.....
		37301-3412		85053 or 89442	.....
		37390-4401		85053 or 89442	.....
		37390-4402		85053 or 89442	.....
		37390-4403		85053 or 89442	.....
	With Hendrickson HAS-40LH Rear Suspension	57241-1		.....	83111
	With Hendrickson Rear Suspension	47902-13		.....	83122 or 89406
		47902-24		.....	83121
		47902-8		.....	83122 or 89406
	With Neway Rear Suspension	90044025		.....	83209 or 89414
		90044907		.....	83635
		90045099		.....	85906

Gabriel Part Numbers that appear in BLUE are GasSLX, adjustable shocks.\ Los números de parte Gabriel imprimidos en AZUL son amortiguadores ajustables GasSLX. \
Les numéros de pièce Gabriel imprimés en BLEU sont des amortisseurs ajustables GasSLX.

Gabriel® COMMERCIAL VEHICLE

WESTERN STAR .. cont'd

4800 & 4900 Series - Heritage Class

Year Año Année	Model Modelo Modèle	O.E.M. #	Mount	Front Delantero Avant	Rear Trasero Arrière
	4842F, 4864F, 4843S, 4864S, 4942F, 4964F, 4942S or 4964S Heritage Class	37301-3401		85053 or 89442	.....
		37301-3404		85053 or 89442	.....
		37301-3409		85053 or 89442	.....
		37301-3412		85053 or 89442	.....
		37390-4401		85053 or 89442	.....
		37390-4402		85053 or 89442	.....
		37390-4403		85053 or 89442	.....
	With Hendrickson HAS-40LH Rear Suspension	57241-1		.....	83111
	With Hendrickson Rear Suspension	47902-13		.....	83122 or 89406
		47902-24		.....	83121
		47902-8		.....	83122 or 89406
	With Neway Rear Suspension	90044025		.....	83209 or 89414
		90044907		.....	83635
		90045099		.....	85906

5800 & 5900 Series - Constellation Class

	5842SS, 5864SS, 5942SS or 5964SS Constellation Class	37301-3401		85053 or 89442	.....
		37301-3404		85053 or 89442	.....
		37301-3409		85053 or 89442	.....
		37301-3412		85053 or 89442	.....
		37390-4401		85053 or 89442	.....
		37390-4402		85053 or 89442	.....
		37390-4403		85053 or 89442	.....
	With Hendrickson Rear Suspension	47902-13		.....	83122 or 89406
		47902-24		.....	83121
		47902-8		.....	83122 or 89406
	With Neway Rear Suspension	90044025		.....	83209 or 89414
		90044907		.....	83635
		90045099		.....	85906

Gabriel Part Numbers that appear in BLUE are GasSLX, adjustable shocks.\ Los números de parte Gabriel imprimidos en AZUL son amortiguadores ajustables GasSLX. \ Les numéros de pièce Gabriel imprimés en BLEU sont des amortisseurs ajustables GasSLX.

Gabriel® COMMERCIAL VEHICLE

Year Año Année	Model Modelo Modèle	O.E.M. #	Mount	Front Delantero Avant	Rear Trasero Arrière
WESTERN STAR .. cont'd					
	5900 & 6900 Series - Heritage Class				
	5942S, 5964S, 6964F or 6964S Heritage Class	37301-3401		85053 or 89442	.....
		37301-3404		85053 or 89442	.....
		37301-3409		85053 or 89442	.....
		37301-3412		85053 or 89442	.....
		37390-4401		85053 or 89442	.....
		37390-4402		85053 or 89442	.....
		37390-4403		85053 or 89442	.....
	All with 4 shock Front System	.....		83401	.....
	With Hendrickson HAS-40LH Rear Suspension	57241-1		.....	83111
	With Hendrickson Rear Suspension	47902-13		.....	83122 or 89406
		47902-24		.....	83121
		47902-8		.....	83122 or 89406
	With Neway Rear Suspension	90044025		.....	83209 or 89414
		90044907		.....	83635
		90045099		.....	85906
	Models with O.E.M. Number	02-7005976		83400	.....
		02-7005977		83400	.....
		04-9041375		.....	85315
		28R010		83216	.....
		35066-4413		.....	83122 or 89406
		35901-0001		.....	83209 or 89414
		35901-4403		.....	85060
		37301-3405		85053 or 89442	.....
		CP-5222		.....	85315
	Additional O.E.M. Interchanges	1011839		83216	
		35901-3406		85305	
		35901-3409		85304	
		35901-3410		85307	
		35901-3413		85006	
		35901-3420		85303	
		676081		83401	
		676082		83401	
WESTERN UNIT "STABILAIRE" SUSPENSION					
	Model 893T Trailer Suspension	.....		.....	85307
	Model TDA202, 203, 206, 240, 241, 243 Truck Drive Axle Suspension	.....		.....	85735
	Model TDA204, 205, 242 - Truck Drive Axle Suspension	.....		.....	85307

Gabriel Part Numbers that appear in BLUE are GasSLX, adjustable shocks.\ Los números de parte Gabriel imprimidos en AZUL son amortiguadores ajustables GasSLX. \
Les numéros de pièce Gabriel imprimés en BLEU sont des amortisseurs ajustables GasSLX.

Gabriel® COMMERCIAL VEHICLE

Year Año Année	Model Modelo Modèle	O.E.M. #	Mount	Front Delantero Avant	Rear Trasero Arrière
WESTERN UNIT "STABILAIRE" SUSPENSION .. cont'd					
	Models with O.E.M. Number	101030		.....	85307
		101364		.....	85305
		4939967		.....	85308 or 89422
		80370		.....	85304
		80600		.....	85300 or 89419
WORKHORSE					
	Models with RSAS Rear Suspension	7805-X-1012		85919	.....

Gabriel Part Numbers that appear in BLUE are GasSLX, adjustable shocks.\ Los números de parte Gabriel imprimidos en AZUL son amortiguadores ajustables GasSLX. \ Les numéros de pièce Gabriel imprimés en BLEU sont des amortisseurs ajustables GasSLX.

NUMERICAL LISTING
LISTA NUMÉRICA
LISTE NUMÉRIQUE

GABRIEL # | APPLICATION | MTG. ACC PKG. NO.

Shocks for Special Applications

630811 — **140526**
CHALLENGE
MC NEILUS TRUCK & MAN. COMPANY
REX

632147 — **Not Req'd.**
CHALLENGE
MC NEILUS TRUCK & MAN. COMPANY

632155 S 646155 — **Not Req'd.**
CHALLENGE
HENDRICKSON SUSPENSION
LINK/HIGH-STEER
NEWAY SUSPENSION SYSTEMS
OSHKOSH MOTORS
SPRING VALLEY
SUSPENSIONS INC.

646155 N
GRANNING SUSPENSION
WATSON & CHALIN MFG. INC.

665472 — **Not Req'd**
INGERSALL MACHINE

665937 — **Not Req'd**
LINK/HIGH-STEER
REYCO/GRANNING
RIDEWELL CORP.

Gas Light Truck

G60002 — **141138**
FORD

G60003 — **140885**
FORD
INTERNATIONAL (NAVISTAR)
JEEP
MERCURY
MITSUBISHI-FUSO
NISSAN
TOYOTA

G60007 — **Not Req'd.**
FORD

G60008 — **Not Req'd.**
CHEVROLET
GMC

G60010 — **140357**
CHEVROLET
GMC

G60011 — **140126**
FORD
I.H.C. TRUCK

G60012 — **Not Req'd.**
DODGE
PLYMOUTH

G60014 — **140702**
CHEVROLET
GMC

G60015 — **Not Req'd.**
CHEVROLET
GMC

G60017 — **140126**
DODGE
PLYMOUTH

G60021 — **Not Req'd.**
CHEVROLET
FORD
GMC
INTERNATIONAL (NAVISTAR)

G60023 — **140780**
FORD
STERLING TRUCK

G60024 — **140126**
FORD
STERLING TRUCK

G60026 — **140780**
FORD

G60028 — **Not Req'd.**
DODGE
DODGE TRUCK
MOR-RYDE SUSPENSION
PLYMOUTH

G60029 — **Not Req'd.**
DODGE
PLYMOUTH

G60031 — **140884**
CHEVROLET
FORD
I.H.C. TRUCK
JEEP
MITSUBISHI-FUSO

G60033 — **141047**
FORD

G60035 — **Not Req'd.**
FORD

G60038 — **140780**
FORD

G60039 — **Not Req'd.**
CHEVROLET
DODGE
GMC
PLYMOUTH

G60041 — **140780**
FORD

G60042 — **141137**
FORD
JEEP

G60043 — **140126**
DODGE
PLYMOUTH

G60044 — **Not Req'd.**
CHEVROLET
GMC

G60045 — **Not Req'd.**
CHEVROLET
GMC

G60046 — **141138**
FORD
MITSUBISHI-FUSO

G60048 — **Not Req'd.**
FORD

G60049 — **140455**
CHEVROLET
GMC
ISUZU

G60050 — **Not Req'd.**
CHEVROLET
GMC
ISUZU
OLDSMOBILE

G60051 — **Not Req'd.**
CHEVROLET
GMC
ISUZU
OLDSMOBILE

G60052 — **141353**
JEEP

G60053 — **Not Req'd.**
JEEP

G60062 — **Not Req'd.**
CHRYSLER
DODGE
PLYMOUTH

G60063 — **Not Req'd.**
FORD

G60064 — **Not Req'd.**
CHEVROLET
GMC

G60065 — **140357**
CHEVROLET
GMC

G60066 — **Not Req'd.**
FORD

G60067 — **Not Req'd.**
JEEP
TOYOTA

G60068 — **Not Req'd.**
FORD
JEEP

G60069 — **Not Req'd.**
JEEP

G60070 — **141041**
TOYOTA

G60071 — **140780**
FORD

G60072 — **141047**
FORD

G60073 — **140780**
FORD

G60074 — **141356**
DODGE
MITSUBISHI

G60075 — **Not Req'd.**
DODGE
HINO
MITSUBISHI

NUMERICAL LISTING
LISTA NUMÉRICA
LISTE NUMÉRIQUE

GABRIEL #	APPLICATION	MTG. ACC PKG. NO.
G60076	CHEVROLET GMC	**141168**
G60077	CHEVROLET GMC VOLKSWAGEN	**Not Req'd.**
G60078	FORD	**140126**
G60080	FORD	**Not Req'd.**
G60081	FORD	**Not Req'd.**
G60083	DODGE	**Not Req'd.**
G60084	FORD	**Not Req'd.**
G60086	TOYOTA	**140524**
G60087	TOYOTA	**140524**
G60088	LAND ROVER	**141439**
G60091	TOYOTA	**141349 & 140169**
G60096	TOYOTA	**Not Req'd.**
G60097	CHEVROLET GMC	**Not Req'd.**
G60098	CHEVROLET GMC	**141537**
G60099	FORD JEEP	**Not Req'd.**
G60100	NISSAN	**140524**
G60101	CHEVROLET DODGE FORD ISUZU JEEP MITSUBISHI NISSAN TOYOTA	**141137**
G60103	TOYOTA	**140149**
G60104	ISUZU MAZDA	**141350**
G60105	TOYOTA	**141349**
G60106	TOYOTA	**140524**
G60107	CHEVROLET TRUCK GMC TRUCK HINO ISUZU	**Not Req'd.**
G60110	DODGE	**Not Req'd.**
G60111	CHEVROLET DODGE FREIGHTLINER GMC	**Not Req'd.**
G60112	CHEVROLET GMC	**Not Req'd.**
G60113	CHEVROLET GMC	**140702**
G60114	FORD	**140780**
G60119	DODGE DODGE TRUCK	**140169**
G60120	FORD	**Not Req'd.**
G60124	LAND ROVER	**141448**
G60128	TOYOTA	**140149**
G60129	FORD JEEP	**141353**
G60143	FORD MAZDA	**Not Req'd.**
G60144	FORD MAZDA	**Not Req'd.**
G60152	DODGE MITSUBISHI	**Not Req'd.**
G60153	TOYOTA	**141350**
G60154	TOYOTA	**140921**
G60158	FORD	**140780**
G60160	MAZDA	**Not Req'd.**
G60161	FORD MAZDA	**140719**
G60162	FORD MAZDA	**140780**
G60163	CADILLAC CHEVROLET GMC	**Not Req'd.**
G60164	HONDA INTERNATIONAL (NAVISTAR) ISUZU MITSUBISHI-FUSO NISSAN TOYOTA	**140524**
G60165	DAIHATSU HONDA ISUZU	**140524**
G60171	FORD MAZDA	**140780**
G60176	LAND ROVER LEXUS TOYOTA	**142069**
G60177	CHEVROLET TRUCK GMC TRUCK ISUZU LEXUS TOYOTA	**140169 & 142095**
G60179	FORD	**Not Req'd.**
G60180	TOYOTA	**141514**
G60181	FORD	**140780**
G60182	FORD	**140780**
G60183	FORD	**140780**
G60184	FORD	**140780**
G60185	CHEVROLET GMC	**140702**
G60186	JEEP	**Not Req'd.**
G60194	MAZDA	**140524**
G60196	CADILLAC CHEVROLET GMC	**Not Req'd.**
G60197	MAZDA	**Not Req'd.**
G60199	MAZDA	**Not Req'd.**
G60204	TOYOTA	**Not Req'd.**
G60205	DODGE	**141448**
G60206	CHEVROLET DODGE GMC	**Not Req'd.**
G60214	CHEVROLET GMC	**Not Req'd.**

NUMERICAL LISTING
LISTA NUMÉRICA
LISTE NUMÉRIQUE

GABRIEL #	APPLICATION	MTG. ACC PKG. NO.
G60216	DODGE	**141448**
G60217	DODGE	**141448**
G60218	CHEVROLET DODGE GMC	**Not Req'd.**
G60219	FORD	**Not Req'd.**
G60221	FORD MAZDA MERCURY	**Not Req'd.**
G60222	FORD MERCURY	**140719**
G60226	JEEP	**Not Req'd.**
G60232	TOYOTA	**Not Req'd.**
G60233	CHRYSLER DODGE PLYMOUTH	**Not Req'd.**
G60235	FORD	**Not Req'd.**
G60237	LAND ROVER	**141448**
G60250	ACURA ISUZU	**141354**
G60251	ACURA ISUZU	**140169**
G60253	HONDA ISUZU	**Not Req'd.**
G60255	INFINITI NISSAN	**141137**
G60257	FORD LINCOLN	**141665**
G60258	FORD	**141665**
G60259	FORD	**141665**
G60260	FORD LINCOLN	**Not Req'd.**
G60263	KIA	**Not Req'd.**
G60264	JEEP	**141665**
G60265	JEEP	**Not Req'd.**
G60269	TOYOTA	**140921**

GABRIEL #	APPLICATION	MTG. ACC PKG. NO.
G60301	TOYOTA	**140673**
G60303	CHEVROLET ISUZU NISSAN	**140857**
G60304	TOYOTA	**141376**
G60305	MITSUBISHI NISSAN	**141356**
G60306	DODGE	**Not Req'd.**
G60307	CHEVROLET GMC	**Not Req'd.**
G60308	CHEVROLET DODGE MAZDA MITSUBISHI NISSAN PLYMOUTH TOYOTA	**Not Req'd.**
G60309	CHEVROLET GMC	**Not Req'd.**
G60310	CHEVROLET ISUZU NISSAN	**141368**
G60312	CHEVROLET OLDSMOBILE PONTIAC	**Not Req'd.**
G60313	DODGE	**Not Req'd.**
G60329	ISUZU	**Not Req'd.**
G60330	FORD	**140780**
G60338	TOYOTA	**140673**
G60353	SUZUKI	**Not Req'd.**
G60354	DODGE MITSUBISHI PLYMOUTH	**140455**
G61112	FORD MAZDA	
G61113	FORD MAZDA	
G61115	FORD MAZDA	

GABRIEL #	APPLICATION	MTG. ACC PKG. NO.
G61116	CHEVROLET OLDSMOBILE PONTIAC	
G61118	FORD	
G61121	MITSUBISHI	
G61122	MITSUBISHI	
G61124	CHEVROLET GMC	
G61139	SUZUKI	**140455**
G61140	ASUNA (Canadian Vehicle) CHEVROLET GEO GMC PONTIAC SUZUKI	**141514**
G61144	CHEVROLET GMC	**141665**
G61149	FORD	**Not Req'd.**
G61150	FORD STERLING TRUCK	**Not Req'd.**
G61151	FORD	**Not Req'd.**
G61152	FORD	**Not Req'd.**
G61153	CHEVROLET GMC	**Not Req'd.**
G61154	NISSAN	**Not Req'd.**
G61156	TOYOTA	**Not Req'd.**
G61158	CHEVROLET GMC HUMMER	**Not Req'd.**
G61159	CHEVROLET GMC	**Not Req'd.**

FleetLine

83001	FREIGHTLINER	**Not Req'd.**
83002	KENWORTH LINK MANUFACTURING	**Not Req'd.**
83003	MACK	**140455**
83004	VOLVO	**Not Req'd.**

NUMERICAL LISTING
LISTA NUMÉRICA
LISTE NUMÉRIQUE

GABRIEL #	APPLICATION	MTG. ACC PKG. NO.
83005	INTERNATIONAL (NAVISTAR) LINK MANUFACTURING	**140455**
83006	FREIGHTLINER	**Not Req'd.**
83007	MACK	**Not Req'd.**
83008	PETERBILT	**Not Req'd.**
83009	FREIGHTLINER OSHKOSH MOTORS	**Not Req'd.**
83010	WESTERN STAR	**Not Req'd.**
83011	KENWORTH PETERBILT	**Not Req'd.**
83012	KENWORTH PETERBILT	**Not Req'd.**
83013	INTERNATIONAL (NAVISTAR) LINK MANUFACTURING	**Not Req'd.**
83014	INTERNATIONAL (NAVISTAR) MACK	**140455(2)**
83015	INTERNATIONAL (NAVISTAR)	**140455**
83016	CHEVROLET TRUCK (Also see GMC FORD FREIGHTLINER GMC INTERNATIONAL (NAVISTAR) KENWORTH LINK MANUFACTURING MACK PETERBILT VOLVO WESTERN STAR	**Not Req'd.**
83017	FREIGHTLINER	**Not Req'd.**
83018	MACK	**140780**
83019	MACK	**140780**
83020	FREIGHTLINER	**Not Req'd.**
83021	CHEVROLET TRUCK (Also see GMCTruck) FREIGHTLINER GMC INTERNATIONAL (NAVISTAR) KENWORTH LINK MANUFACTURING MARMON PETERBILT	**Not Req'd.**
83022	WESTERN STAR	**Not Req'd.**
83023	CHEVROLET TRUCK (Also see GMCTruck) FORD FREIGHTLINER GMC INTERNATIONAL (NAVISTAR) KENWORTH LINK MANUFACTURING MACK PETERBILT VOLVO WESTERN STAR	**Not Req'd.**
83024	KENWORTH LINK MANUFACTURING	**Not Req'd.**
83025	FORD FREIGHTLINER INTERNATIONAL (NAVISTAR) KENWORTH LINK MANUFACTURING PETERBILT	**Not Req'd.**
83026	WESTERN STAR	**Not Req'd.**
83027	WESTERN STAR	**140126**
83028	VOLVO	**Not Req'd.**
83029	VOLVO	**Not Req'd.**
83030	VOLVO	**Not Req'd.**
83031	KENWORTH LINK MANUFACTURING	**Not Req'd.**
83032	FORD FREIGHTLINER INTERNATIONAL (NAVISTAR) KENWORTH LINK MANUFACTURING	**Not Req'd.**
83033	FORD STERLING	**Not Req'd.**
83034	FORD FREIGHTLINER STERLING	**Not Req'd.**
83035	PETERBILT	**Not Req'd**
83038	FREIGHTLINER	**Not Req'd**
83039	FREIGHTLINER	**Not Req'd**
83040	FREIGHTLINER	**Not Req'd**
83041 **N**	MACK	
83042 **N**	PETERBILT	**Not Req'd.**
83100	INTERNATIONAL (NAVISTAR) MERCEDES	**Not Req'd.**
83101	INTERNATIONAL (NAVISTAR)	**Not Req'd.**
83102	THOMAS SCHOOL BUS	**145089-000(2)**
83103	INTERNATIONAL (NAVISTAR) MITSUBISHI-FUSO MOR-RYDE SUSPENSION VOLVO	**145054(2)**
83104	HINO VOLVO	**Not Req'd.**
83105	MACK VOLVO	**140780**
83107	FORD STERLING TRUCK	**145080(2)**
83109	FORD HENDRICKSON TRUCK SUSPENSION STERLING TRUCK	**145128**
83110	HENDRICKSON TRUCK SUSPENSION MACK	**145128**
83111	HENDRICKSON TRUCK SUSPENSIONSYSTEMS MACK WESTERN STAR	**145128**
83112	HENDRICKSON TRUCK SUSPENSIONSYSTEMS MACK VOLVO	**145128**
83113	NEWAY (HOLLAND) SUSPENSIONSYSTEMS STOUGHTON TRAILERS INC. TRAILMOBILE CANADA CORP.	**Not Req'd.**
83114	CHEVROLET TRUCK GMC TRUCK INTERNATIONAL (NAVISTAR) ISUZU NISSAN	**140780**
83115	NEWAY (HOLLAND) SUSPENSION TRAILMOBILE CANADA CORP.	**Not Req'd.**
83116	FREIGHTLINER CUSTOM CHASSIS	**Not Req'd.**
83117	FREIGHTLINER CUSTOM CHASSIS OSHKOSH MOTORS	**Not Req'd.**
83118	FREIGHTLINER CUSTOM CHASSIS MAECO	**Not Req'd.**
83119	FREIGHTLINER CUSTOM CHASSIS OSHKOSH MOTORS	**Not Req'd.**
83120	FREIGHTLINER FREIGHTLINER CUSTOM CHASSIS STERLING TRUCK	**145089-000(1) & 145143(1)**

NUMERICAL LISTING
LISTA NUMÉRICA
LISTE NUMÉRIQUE

GABRIEL #	APPLICATION	MTG. ACC PKG. NO.
83121	**S 83137**	**Not Req'd.**
	BERING TRUCK CORP.	
	CHEVROLET TRUCK	
	GMC TRUCK	
	HENDRICKSON TRUCK SUSPENSIONSYSTEMS	
	KENWORTH	
	NEWAY (HOLLAND) SUSPENSIONSYSTEMS	
	VOLVO	
	WESTERN STAR	
83122		**Not Req'd.**
	ALLCO TRAILER	
	CHEVROLET TRUCK	
	FORD	
	FRUEHAUF	
	GILLIG BROS.	
	GMC TRUCK	
	GREAT DANE TRAILER	
	HENDRICKSON TRUCK SUSPENSION	
	LODAL, INC.	
	MACK	
	MAECO	
	MARMON	
	NEWAY (HOLLAND) SUSPENSIONSYSTEMS	
	OSHKOSH MOTORS	
	REYCO SUSPENSION	
	VOLVO	
	VOLVO-AUTOCAR	
	WESTERN STAR	
83123		**Not Req'd.**
	FORD	
	HENDRICKSON TRUCK SUSPENSIONSYSTEMS	
	INTERNATIONAL (NAVISTAR)	
	KENWORTH	
	MACK	
	MARMON	
	NEWAY (HOLLAND) SUSPENSIONSYSTEMS	
	REYCO SUSPENSION	
	VOLVO	
	WATSON & CHALIN MFG. INC.	
83124		**Not Req'd.**
	BENSON TRUCK BODIES INC.	
	KENWORTH	
	NEWAY (HOLLAND) SUSPENSIONSYSTEMS	
	TRAILMOBILE CANADA CORP.	
	TWIN COACH	
83125		**Not Req'd.**
	CASCADE TRAILER	
	FORD	
	HENDRICKSON TRUCK SUSPENSIONSYSTEMS	
	HOLLAND - BINKLEY	
	MACK	
	MAECO	
	NEWAY (HOLLAND) SUSPENSIONSYSTEMS	
	PEERLESS TRAILER	
	STERLING TRUCK	
	THE BINKLEY COMPANY	
	TRAILMOBILE CANADA CORP.	
	VOLVO	
	WATSON & CHALIN MFG. INC.	
83126		**Not Req'd.**
	HINO	
	NEWAY (HOLLAND) SUSPENSIONSYSTEMS	

GABRIEL #	APPLICATION	MTG. ACC PKG. NO.
83127		**Not Req'd.**
	FREIGHTLINER CUSTOM CHASSIS	
	NEWAY (HOLLAND) SUSPENSION	
	OSHKOSH MOTORS	
	TRAILMOBILE CANADA CORP.	
83128		**Not Req'd.**
	FREIGHTLINER	
	NEWAY (HOLLAND) SUSPENSIONSYSTEMS	
	STOUGHTON TRAILERS INC.	
	TWIN COACH	
83130		**Not Req'd.**
	NEWAY (HOLLAND) SUSPENSIONSYSTEMS	
83131		**Not Req'd.**
	FORD	
83132	**S 83140**	**401754(4)**
	FORD	
83134		**145054**
	FREIGHTLINER	
83135	**N**	
	INTERNATIONAL (NAVISTAR)	
83136	**N**	
	CHEVROLET TRUCK	
	GMC TRUCK	
	KENWORTH	
	PETERBILT	
83137	**N**	**Not Req'd.**
	HENDRICKSON TRUCK SUSPENSIONSYSTEMS	
	MACK	
83138	**N**	**145128(1)**
	MACK	
83140	**N**	**415010-802(2) & 145148(2)**
	HINO	
83141	**N**	**415010-802(2) & 145148(2)**
	HINO	
83142	**N**	**1451281**
	HENDRICKSON TRUCK SUSPENSION	
83143	**N**	**1451281**
	HENDRICKSON TRUCK SUSPENSION	
83144	**N**	**Not Req'd.**
	HENDRICKSON TRUCK SUSPENSION	
83200		**140149**
	FORD	
	STERLING TRUCK	
83203		**Not Req'd.**
	CHANCE BUS	
	CHEVROLET TRUCK	
	DURA SUSPENSION	
	FRUEHAUF	
	GMC TRUCK	
	HIGHWAY PRODUCT	
	HUTCHENS SUSPENSION	
	MACK	
	MOHAWK	
	NEWAY (HOLLAND) SUSPENSIONSYSTEMS	
	ORION BUS INDUSTRIES	
	PAGE SUSPENSION	
	REYCO SUSPENSION	
	RIDEWELL CORPORATION	
	VOLVO	
	WATSON & CHALIN MFG. INC.	

GABRIEL #	APPLICATION	MTG. ACC PKG. NO.
83204		**Not Req'd.**
	DUPLEX TRUCK	
	DURA SUSPENSION	
	MAECO	
	NEWAY (HOLLAND) SUSPENSION	
	PAGE SUSPENSION	
	REYCO SUSPENSION	
	TRAILMOBILE CANADA CORP.	
	VOLVO	
	WATSON & CHALIN MFG. INC.	
83207		**Not Req'd.**
	BLUEBIRD SCHOOL BUS	
	BROCKWAY SCHOOL BUS	
	CHANCE BUS	
	CHEVROLET TRUCK	
	DURA SUSPENSION	
	FORD	
	GMC TRUCK	
	GREAT DANE TRAILER	
	HARDEE MFG	
	HENDRICKSON TRUCK SUSPENSIONSYSTEMS	
	HIGHWAY PRODUCT	
	INTERNATIONAL (NAVISTAR)	
	MACK	
	MAECO	
	MOHAWK	
	NATIONAL COACH CORP	
	NEWAY (HOLLAND) SUSPENSION	
	OSHKOSH MOTORS	
	REYCO SUSPENSION	
	RIDEWELL CORPORATION	
	TRAILMOBILE CANADA CORP.	
	TWIN COACH	
	VOLVO	
83209		**Not Req'd.**
	CHEVROLET TRUCK	
	FORD	
	GMC TRUCK	
	HENDRICKSON TRAILER SUSPENSIONSYSTEMS	
	INTERNATIONAL (NAVISTAR)	
	MACK	
	NEWAY (HOLLAND) SUSPENSION	
	REYCO SUSPENSION	
	TRAILMOBILE CANADA CORP.	
	VOLVO	
	WESTERN STAR	
83214		**401754(4)**
	CHEVROLET TRUCK	
	DIAMOND-REO	
	GMC TRUCK	
	GRANNING SUSPENSION	
	OSTERLUND TRUCK	
	SPARTAN MOTORS	
	VOLVO	
83215		**401754(4)**
	ACF BRILL BUS	
	BROCKWAY SCHOOL BUS	
	CHEVROLET TRUCK	
	FORD	
	GMC TRUCK	
	HENDRICKSON TRUCK SUSPENSION	
	HINO	
	INTERNATIONAL (NAVISTAR)	
	MACK	
	PAI CORP	
	REYCO SUSPENSION	
	STERLING TRUCK	
	VOLVO	

NUMERICAL LISTING
LISTA NUMÉRICA
LISTE NUMÉRIQUE

GABRIEL #	APPLICATION	MTG. ACC PKG. NO.
83216		**140149**
	BROCKWAY SCHOOL BUS	
	CHEVROLET TRUCK	
	FORD	
	GILLIG BROS.	
	GMC TRUCK	
	HINO	
	INTERNATIONAL (NAVISTAR)	
	MACK	
	MAECO	
	MARMON	
	MOHAWK	
	NEOPLAN BUS	
	ONEIDA PRODUCTS	
	VOLVO	
	VOLVO-AUTOCAR	
	WESTERN STAR	
83217		**401754(4)**
	CHEVROLET TRUCK	
	DIAMOND-REO	
	FLXIBLE BUS	
	FORD	
	GMC TRUCK	
	HINO	
	HYSTER	
	MACK	
	OLE GRANNING	
	OTTAWA TRUCK	
	REYCO SUSPENSION	
	SOUTHERN COACH	
	VOLVO	
83219		**140149**
	CHEVROLET TRUCK	
	FORD	
	GILLIG BROS.	
	GMC TRUCK	
	VOLVO	
83221		**Not Req'd.**
	CHEVROLET TRUCK	
	GMC TRUCK	
	KENWORTH	
	MACK	
	OSHKOSH MOTORS	
	PAI CORP	
	REYCO SUSPENSION	
	VOLVO	
83225		**401754(4)**
	ACF BRILL BUS	
	FORD	
	FREIGHTLINER	
	HENDRICKSON TRUCK SUSPENSIONSYSTEMS	
	INTERNATIONAL (NAVISTAR)	
	MACK	
	MOHAWK	
	TRAILMOBILE CANADA CORP.	
	VOLVO	
83242	**N**	
	MACK	
83301		**141083**
	INTERNATIONAL (NAVISTAR)	
83303		**140702**
	CHEVROLET TRUCK	
	GMC TRUCK	
	VOLVO	

GABRIEL #	APPLICATION	MTG. ACC PKG. NO.
83304		**140702**
	CHEVROLET TRUCK	
	GMC TRUCK	
	VOLVO	
83308		**140149**
	CHEVROLET TRUCK	
	FORD	
	GMC TRUCK	
	INTERNATIONAL (NAVISTAR)	
	STERLING TRUCK	
83309		**140149**
	FORD	
	INTERNATIONAL (NAVISTAR)	
	STERLING TRUCK	
	VOLVO	
83312		**140149**
	FORD	
	KENWORTH	
	OSHKOSH MOTORS	
	VOLVO	
83314		**140149**
	FORD	
	INTERNATIONAL (NAVISTAR)	
	STERLING TRUCK	
	VOLVO	
83317		**141083**
	INTERNATIONAL (NAVISTAR)	
83318		**141083(2)**
	INTERNATIONAL (NAVISTAR)	
83353		**145099**
	KENWORTH	
	VOLVO	
83362		**401754(4)**
	HINO	
83400		**140455(2)**
	CHEVROLET TRUCK	
	FORD	
	GMC TRUCK	
	MOR-RYDE SUSPENSION	
	VOLVO	
	WATSON & CHALIN MFG. INC.	
	WESTERN STAR	
83401		**Not Req'd.**
	CHEVROLET TRUCK	
	GMC TRUCK	
	VOLVO	
	WESTERN STAR	
83456		**142998(2)**
	INTERNATIONAL (NAVISTAR)	
	MITSUBISHI-FUSO	
	VOLVO	
83613		**141083(2)**
	INTERNATIONAL (NAVISTAR)	
	THOMAS SCHOOL BUS	
83634		**Not Req'd.**
	FREIGHTLINER	
83635		**145054**
	NEWAY (HOLLAND) SUSPENSION	
	VOLVO	
	WESTERN STAR	
83636		**Not Req'd.**
	INTERNATIONAL (NAVISTAR)	

GABRIEL #	APPLICATION	MTG. ACC PKG. NO.
85000		**Not Req'd.**
	BENSON TRUCK BODIES INC.	
	EAST TRAILER	
	FREIGHTLINER	
	HENDRICKSON TRAILER SUSPENSION	
	HENDRICKSON TRUCK SUSPENSIONSYSTEMS	
	NEWAY (HOLLAND) SUSPENSION	
	ORION BUS INDUSTRIES	
	REYCO SUSPENSION	
	RIDEWELL CORPORATION	
	STOUGHTON TRAILERS INC.	
	THOMAS SCHOOL BUS	
	TRAILMOBILE CANADA CORP.	
	TWIN COACH	
	VOLVO	
	WATSON & CHALIN MFG. INC.	
85001		**401754(4)**
	FORD	
	KENWORTH	
	MACK	
	REYCO SUSPENSION	
	STERLING TRUCK	
	VOLVO	
85003		**Not Req'd.**
	INTERNATIONAL (NAVISTAR)	
	MARMON	
	REYCO SUSPENSION	
	VOLVO	
85004		**401754(4)**
	NEWAY (HOLLAND) SUSPENSION	
	PETERBILT	
85005		**Not Req'd.**
	CHEVROLET TRUCK	
	FORD	
	GMC TRUCK	
	HENDRICKSON TRAILER SUSPENSION	
	HENDRICKSON TRUCK SUSPENSIONSYSTEMS	
	INTERNATIONAL (NAVISTAR)	
	MACK	
	NEWAY (HOLLAND) SUSPENSION	
	REYCO SUSPENSION	
	RIDEWELL CORPORATION	
	VOLVO	
	VOLVO-AUTOCAR	
	WATSON & CHALIN MFG. INC.	
85006		**Not Req'd.**
	BLUEBIRD SCHOOL BUS	
	BUILT RITE	
	FORD	
	FREIGHTLINER	
	FREIGHTLINER CUSTOM CHASSIS	
	GREAT DANE TRAILER	
	HENDRICKSON TRAILER SUSPENSION	
	MAECO	
	NEWAY (HOLLAND) SUSPENSIONSYSTEMS	
	REYCO SUSPENSION	
	RIDEWELL CORPORATION	
	STERLING TRUCK	
	STOUGHTON TRAILERS INC.	
	THE BINKLEY COMPANY	
	TRAILMOBILE CANADA CORP.	
	VOLVO	
	WESTERN STAR	
85007		**401754(4)**
	FREIGHTLINER	
	KENWORTH	
	MACK	
	VOLVO	

NUMERICAL LISTING
LISTA NUMÉRICA
LISTE NUMÉRIQUE

GABRIEL #	APPLICATION	MTG. ACC PKG. NO.
85009		**145054**
	FREIGHTLINER	
	MITSUBISHI-FUSO	
	NEOPLAN BUS	
85010		**Not Req'd.**
	BLUEBIRD SCHOOL BUS	
	HENDRICKSON TRAILER SUSPENSIONSYSTEMS	
	MACK	
	THOMAS SCHOOL BUS	
85011		**Not Req'd.**
	FREIGHTLINER	
85012		**145080**
	BLUEBIRD SCHOOL BUS	
	BROCKWAY SCHOOL BUS	
	CHEVROLET TRUCK	
	FORD	
	GMC TRUCK	
	INTERNATIONAL (NAVISTAR)	
	ISUZU	
	PETERBILT	
85013		**Not Req'd.**
	BLUEBIRD SCHOOL BUS	
	FORD	
	HENDRICKSON TRAILER SUSPENSIONSYSTEMS	
	HENDRICKSON TRUCK SUSPENSIONSYSTEMS	
	INTERNATIONAL (NAVISTAR)	
	MAECO	
	NEWAY (HOLLAND) SUSPENSION	
	PETERBILT	
	REYCO SUSPENSION	
	STERLING TRUCK	
	TRAILMOBILE CANADA CORP.	
	VOLVO	
85014		**Not Req'd.**
	CHANCE BUS	
	HARDEE MFG	
	HENDRICKSON TRAILER SUSPENSION	
	INTERNATIONAL (NAVISTAR)	
	MACK	
	REYCO SUSPENSION	
	RIDEWELL CORPORATION	
85023		**140149**
	VOLVO	
85024		**140149**
	VOLVO	
	VOLVO-AUTOCAR	
85025		**140169 & 145054**
	VOLVO	
85026		**145054**
	VOLVO	
	VOLVO-AUTOCAR	
85027		**145054**
	INTERNATIONAL (NAVISTAR)	
	VOLVO	
	VOLVO-AUTOCAR	
85029		**Not Req'd.**
	BLUEBIRD SCHOOL BUS	
	DURA SUSPENSION	
	HENDRICKSON TRAILER SUSPENSION	
	INTERNATIONAL (NAVISTAR)	
	PAGE SUSPENSION	
	RIDEWELL CORPORATION	
	TRAILMOBILE CANADA CORP.	

GABRIEL #	APPLICATION	MTG. ACC PKG. NO.
85030		**Not Req'd.**
	BLUEBIRD SCHOOL BUS	
	FORD	
	FRUEHAUF	
	HENDRICKSON TRAILER SUSPENSIONSYSTEMS	
	HENDRICKSON TRUCK SUSPENSION	
	INTERNATIONAL (NAVISTAR)	
	KENWORTH	
	MAECO	
	OSHKOSH MOTORS	
	PACIFIC TRUCK & TRAILER	
	REYCO SUSPENSION	
	STERLING TRUCK	
	VOLVO	
85031		**140169**
	KENWORTH	
85033		**145099**
	PETERBILT	
85036		**Not Req'd.**
	HENDRICKSON TRUCK SUSPENSION	
	MACK	
	PETERBILT	
85040		**401754(4)**
	FORD	
	STERLING TRUCK	
	VOLVO	
85042		**401754(4)**
	FREIGHTLINER	
85043		**Not Req'd.**
	FREIGHTLINER	
	FREIGHTLINER CUSTOM CHASSIS	
	HENDRICKSON TRAILER SUSPENSIONSYSTEMS	
	STERLING TRUCK	
85045		**Not Req'd.**
	HENDRICKSON TRAILER SUSPENSION	
	NEWAY (HOLLAND) SUSPENSIONSYSTEMS	
	REYCO SUSPENSION	
85046		**140149**
	VOLVO	
	VOLVO-AUTOCAR	
85047		**140149**
	FORD	
	STERLING TRUCK	
	VOLVO	
85050		**Not Req'd.**
	CHEVROLET TRUCK	
	GMC TRUCK	
85051		**Not Req'd.**
	BLUEBIRD SCHOOL BUS	
	MUNCIE RECLAMATION	
	NEWAY (HOLLAND) SUSPENSIONSYSTEMS	
	OSHKOSH MOTORS	
	REYCO SUSPENSION	
	STOUGHTON TRAILERS INC.	
	TRAILMOBILE CANADA CORP.	
85052		**Not Req'd.**
	BLUEBIRD SCHOOL BUS	
	HENDRICKSON TRAILER SUSPENSIONSYSTEMS	
	NEWAY (HOLLAND) SUSPENSION	
	REYCO SUSPENSION	
	WATSON & CHALIN MFG. INC.	

GABRIEL #	APPLICATION	MTG. ACC PKG. NO.
85053		**145126(2)**
	WESTERN STAR	
85054		**145080(2)**
	FORD	
	STERLING TRUCK	
85055		**145080(2)**
	FORD	
	STERLING TRUCK	
85058		**Not Req'd.**
	FREIGHTLINER CUSTOM CHASSIS	
	INTERNATIONAL (NAVISTAR)	
	OSHKOSH MOTORS	
85059		**Not Req'd.**
	NEWAY (HOLLAND) SUSPENSION	
	STOUGHTON TRAILERS INC.	
	TRAILMOBILE CANADA CORP.	
85060		**Not Req'd.**
	CHALMERS SUSPENSION	
	PETERBILT	
	VOLVO	
	WESTERN STAR	
85061		**Not Req'd.**
	MACK	
	VOLVO	
85062		**145080(2)**
	PETERBILT	
85063		**145080(2)**
	FORD	
	STERLING TRUCK	
85065		**145128(1) & 145144(1)**
	VOLVO	
85066		**145132**
	VOLVO	
85067		
	KENWORTH	
	PETERBILT	
85069	**N**	
	PETERBILT	
85070	**N**	**401754(2)**
	KENWORTH	
85071	**N**	**145054(2)**
	CHEVROLET TRUCK	
	GMC TRUCK	
85072	**N**	**Not Req'd.**
	HENDRICKSON TRUCK SUSPENSIONSYSTEMS	
85300		**401754(4)**
	CHEVROLET TRUCK	
	FREIGHTLINER	
	FRUEHAUF	
	GMC TRUCK	
	GRANNING SUSPENSION	
	HOBBS TRAILERS	
	INTERNATIONAL (NAVISTAR)	
	MUNCIE RECLAMATION	
	NEWAY (HOLLAND) SUSPENSION	
	OSHKOSH MOTORS	
	OSTERLUND TRUCK	
	OTTAWA TRUCK	
	REYCO SUSPENSION	
	VOLVO	
	WATSON & CHALIN MFG. INC.	
	WESTERN UNIT "STABILAIRE"SUSPENSION	

NUMERICAL LISTING
LISTA NUMÉRICA
LISTE NUMÉRIQUE

GABRIEL #	APPLICATION	MTG. ACC PKG. NO.
85301		**401754(4)**
	BECK BUS	
	CHALMERS SUSPENSION	
	CHEVROLET TRUCK	
	CLARK EQUIPMENT	
	FORD	
	GMC TRUCK	
	NEWAY (HOLLAND) SUSPENSIONSYSTEMS	
	STERLING TRUCK	
	VOLVO	
85302		**401754(4)**
	AM GENERAL	
	CHEVROLET TRUCK	
	CRANE CARRIER	
	DINA BUS	
	FORD	
	FREIGHTLINER	
	FWD TRUCK	
	GILLIG BROS.	
	GMC TRUCK	
	MACK	
	MAECO	
	PETERBILT	
	VOLVO	
85303		**401754(4)**
	ACF BRILL BUS	
	BROCKWAY SCHOOL BUS	
	BUS & TRUCK CO.	
	CHEVROLET TRUCK	
	CONTINENTAL TRAILWAYS-EAGLE INT'L	
	CRANE CARRIER	
	CROWN COACH	
	EAGLE MOTOR COACH	
	GMC TRUCK	
	GREYHOUND BUS	
	HENDRICKSON TRUCK SUSPENSION	
	INTERNATIONAL (NAVISTAR)	
	MACK	
	MAECO	
	MATSON SCHOOL BUS	
	MOHAWK	
	ORION BUS INDUSTRIES	
	OSHKOSH MOTORS	
	OTTAWA TRUCK	
	PREVOST	
	TRANSPORTATION MFG. CORP	
	VOLVO	
	WESTERN STAR	

GABRIEL #	APPLICATION	MTG. ACC PKG. NO.
85304		**401754(4)**
	BECK BUS	
	BLUEBIRD SCHOOL BUS	
	BROCKWAY SCHOOL BUS	
	CHEVROLET TRUCK	
	CONTINENTAL TRAILWAYS-EAGLE INT'L	
	CRANE CARRIER	
	CROWN COACH	
	DIAMOND T	
	DIAMOND-REO	
	FLXIBLE BUS	
	FORD	
	FRUEHAUF	
	GILLIG BROS.	
	GMC TRUCK	
	MACK	
	NEWAY (HOLLAND) SUSPENSION	
	OSHKOSH MOTORS	
	RIDEWELL CORPORATION	
	SOUTHERN COACH	
	SPARTAN MOTORS	
	THOMAS SCHOOL BUS	
	UNITED MANUFACTURING	
	VOLVO	
	WESTERN STAR	
	WESTERN UNIT "STABILAIRE"	
85305		**401754(4)**
	BROCKWAY SCHOOL BUS	
	BUS & TRUCK CO.	
	CHEVROLET TRUCK	
	CONTINENTAL TRAILWAYS-EAGLE INT'L	
	EAGLE MOTOR COACH	
	FLXIBLE BUS	
	FORD	
	FRUEHAUF	
	GMC TRUCK	
	HENDRICKSON TRUCK SUSPENSIONSYSTEMS	
	MACK	
	MAECO	
	MOHAWK	
	PAI CORP	
	RIDEWELL CORPORATION	
	VOLVO	
	WESTERN STAR	
	WESTERN UNIT "STABILAIRE"SUSPENSION	

GABRIEL #	APPLICATION	MTG. ACC PKG. NO.
85307		**401754(4)**
	ACF BRILL BUS	
	BECK BUS	
	BLUEBIRD SCHOOL BUS	
	BROCKWAY SCHOOL BUS	
	BUS & TRUCK CO.	
	CHEVROLET TRUCK	
	CLARK EQUIPMENT	
	CONTINENTAL TRAILWAYS-EAGLE INT'L	
	CRANE CARRIER	
	DIAMOND-REO	
	FLXIBLE BUS	
	FORD	
	GMC TRUCK	
	HENDRICKSON TRUCK SUSPENSION	
	INTERNATIONAL (NAVISTAR)	
	MACK	
	MAECO	
	ONEIDA PRODUCTS	
	ORION BUS INDUSTRIES	
	RIDEWELL CORPORATION	
	THOMAS SCHOOL BUS	
	VOLVO	
	WESTERN STAR	
	WESTERN UNIT "STABILAIRE"	
85308		**401754(4)**
	ACF BRILL BUS	
	CHEVROLET TRUCK	
	EAGLE MOTOR COACH	
	FREIGHTLINER	
	GMC TRUCK	
	INTERNATIONAL (NAVISTAR)	
	MACK	
	MAECO	
	MOHAWK	
	ORION BUS INDUSTRIES	
	PETERBILT	
	PREVOST	
	THOMAS SCHOOL BUS	
	VOLVO	
	WESTERN UNIT "STABILAIRE"	
85310		**141108**
	KENWORTH	
	OTTAWA TRUCK	
	VOLVO	
85311		**141247**
	FLXIBLE BUS	
	INTERNATIONAL (NAVISTAR)	
	PETERBILT	
	VOLVO	
85312		**141247**
	MOTOR COACH INDUSTRIES	
	TRANSPORTATION MFG. CORP	
85313		**401754(4)**
	FLXIBLE BUS	
	GMC TRUCK	
	GREYHOUND BUS	
	MOTOR COACH INDUSTRIES	
	REYCO SUSPENSION	
	TRANSPORTATION MFG. CORP	
85314		**401754(4)**
	EAGLE MOTOR COACH	
	FORD	
	KENWORTH	
	STERLING TRUCK	
	VOLVO	

NUMERICAL LISTING
LISTA NUMÉRICA
LISTE NUMÉRIQUE

GABRIEL #	APPLICATION	MTG. ACC PKG. NO.
85315		**401754(4)**
	CLARK EQUIPMENT	
	CUNHA PRODUCTS OHD	
	FORD	
	JIFFLOX	
	KWK-LOC (JIFFLOX)	
	VOLVO	
	WESTERN STAR	
85316		**145090**
	INTERNATIONAL (NAVISTAR)	
	MAECO	
	OSHKOSH MOTORS	
85318		**145054**
	GILLIG BROS.	
	HAUSMAN	
85319		**145089- 000**
	FREIGHTLINER	
	VOLVO	
85320		**401754(4)**
	FREIGHTLINER	
	MAECO	
85321		**Not Req'd.**
	FRUEHAUF	
	HOLLAND - BINKLEY	
	MACK	
85322		**Not Req'd.**
	FRUEHAUF	
85323		**Not Req'd.**
	EAST TRAILER	
	HENDRICKSON TRAILER SUSPENSIONSYSTEMS	
	NEWAY (HOLLAND) SUSPENSION	
	WATSON & CHALIN MFG. INC.	
85324		**145054(2)**
	CHEVROLET TRUCK	
	GMC TRUCK	
85327		**401754(2)**
	FRUEHAUF	
85329		**401754(4)**
	PREVOST	
85330		**145054**
	PREVOST	
85331		**Not Req'd.**
	FREIGHTLINER	
85332		**145128**
	INTERNATIONAL (NAVISTAR)	
85333		**145128**
	INTERNATIONAL (NAVISTAR)	
85334		**401754(4)**
	ADVANCE MIXER	
85335		**Not Req'd.**
	FREIGHTLINER	
85336	**N**	**145054(2)**
	CHEVROLET TRUCK	
	GMC TRUCK	
	PETERBILT	
85337	**N**	**Not Req'd.**
	HENDRICKSON TRAILER SUSPENSION	
85338	**N**	**Not Req'd.**
	HENDRICKSON TRAILER SUSPENSION	

GABRIEL #	APPLICATION	MTG. ACC PKG. NO.
85376		**401754(4)**
	FORD	
	STERLING TRUCK	
85700		**401754(4)**
	ABC BUS	
	AM GENERAL	
	CHEVROLET TRUCK	
	EAGLE MOTOR COACH	
	FLXIBLE BUS	
	FLYER INDUSTRIES	
	GMC TRUCK	
	GREYHOUND BUS	
	JAY MADSEN	
	MOTOR COACH INDUSTRIES	
	MUNCIE RECLAMATION	
	NOVA BUS	
	ORION BUS INDUSTRIES	
	SICARD	
	TRANSPORTATION MFG. CORP	
85701		**145054(2)**
	CHEVROLET TRUCK	
	FLXIBLE BUS	
	GMC TRUCK	
	MUNCIE RECLAMATION	
	NOVA BUS	
	TRANSPORTATION MFG. CORP	
85702		**401754(4)**
	CHEVROLET TRUCK	
	FLXIBLE BUS	
	GMC TRUCK	
	HAUSMAN	
	MOHAWK	
	MUNCIE RECLAMATION	
	NOVA BUS	
	REYCO SUSPENSION	
	RIDEWELL CORPORATION	
	TRANSPORTATION MFG. CORP	
85703		**141247**
	FLXIBLE BUS	
	GRUMMAN BUS	
	MOHAWK	
	MUNCIE RECLAMATION	
85704		**401754(4)**
	CHEVROLET TRUCK	
	FLXIBLE BUS	
	GMC TRUCK	
	GRUMMAN BUS	
	MOHAWK	
	MOTOR COACH INDUSTRIES	
	MUNCIE RECLAMATION	
	REYCO SUSPENSION	
	RIDEWELL CORPORATION	
85705		**145090(2)**
	FLXIBLE BUS	
	MUNCIE RECLAMATION	
	NEOPLAN BUS	
85706		**145090(2)**
	HAUSMAN	
	NEOPLAN BUS	
85707		**145090(2)**
	FLXIBLE BUS	
	MOHAWK	
	MUNCIE RECLAMATION	
	NEOPLAN BUS	

GABRIEL #	APPLICATION	MTG. ACC PKG. NO.
85708		**145090(2)**
	CHEVROLET TRUCK	
	FLXIBLE BUS	
	FLYER INDUSTRIES	
	GMC TRUCK	
	M.A.N. BUS	
	MOTOR COACH INDUSTRIES	
	MUNCIE RECLAMATION	
	NEW FLYER	
85709		**145090(2)**
	M.A.N. BUS	
	MUNCIE RECLAMATION	
85710		**141247**
	CHEVROLET TRUCK	
	FLXIBLE BUS	
	GMC TRUCK	
	MUNCIE RECLAMATION	
	NOVA BUS	
	TRANSPORTATION MFG. CORP	
85711		**141247**
	CHEVROLET TRUCK	
	FLXIBLE BUS	
	FLYER INDUSTRIES	
	GMC TRUCK	
	NEW FLYER	
	ORION BUS INDUSTRIES	
85712		**401754(4)**
	BLUEBIRD SCHOOL BUS	
	FLUIDRIVE	
	FLXIBLE BUS	
	GRANNING SUSPENSION	
	HENDRICKSON TRAILER SUSPENSION	
	ORION BUS INDUSTRIES	
	RAYDAN MANUFACTURING	
	RIDEWELL CORPORATION	
	SPARTAN MOTORS	
	THOMAS SCHOOL BUS	
85713		**401754(4)**
	CRANE CARRIER	
	EAGLE MOTOR COACH	
	MOTOR COACH INDUSTRIES	
	MUNCIE RECLAMATION	
	NOVA BUS	
	PREVOST	
	REYCO SUSPENSION	
	THOMAS SCHOOL BUS	
	TRANSPORTATION MFG. CORP	
85714		**145093**
	MOHAWK	
	ORION BUS INDUSTRIES	
85715		**145093**
	MOHAWK	
	ORION BUS INDUSTRIES	
85716		**145093**
	DINA BUS	
	FLXIBLE BUS	
	FORD	
	GILLIG BROS.	
	MAECO	
	ORION BUS INDUSTRIES	
85717		**145093**
	MOHAWK	
	ORION BUS INDUSTRIES	
	REYCO SUSPENSION	
85718		**145093**
	FLXIBLE BUS	
	MOHAWK	
	ORION BUS INDUSTRIES	

NUMERICAL LISTING
LISTA NUMÉRICA
LISTE NUMÉRIQUE

GABRIEL #	APPLICATION	MTG. ACC PKG. NO.
85719		**145093**
	ORION BUS INDUSTRIES	
85720		**401754(4)**
	ORION BUS INDUSTRIES	
	OTTAWA TRUCK	
85722		**145090**
	FLYER INDUSTRIES	
	M.A.N. BUS	
	NEW FLYER	
	VOLVO	
85723		**145075**
	GILLIG BROS.	
	MUNCIE RECLAMATION	
85724		**Not Req'd.**
	FREIGHTLINER	
	STERLING TRUCK	
85727		**145140(2) & 405360(2)**
	MOTOR COACH INDUSTRIES	
	NEW FLYER	
85728		**145140(2)**
	MOTOR COACH INDUSTRIES	
85729		**145054(1) & 401754(2)**
	MOTOR COACH INDUSTRIES	
85730		**401754(4)**
	FLXIBLE BUS	
85731		**145054(1) & 401754(2)**
	FLXIBLE BUS	
85732		**145116(2)**
	ORION BUS INDUSTRIES	
85733		**145089-000**
	CHEVROLET TRUCK	
	EAGLE MOTOR COACH	
	FLXIBLE BUS	
	GMC TRUCK	
	MOTOR COACH INDUSTRIES	
	TRANSPORTATION MFG. CORP	
85734	**N**	
	BLUEBIRD SCHOOL BUS	
	CHEVROLET TRUCK	
	CROWN COACH	
	FLXIBLE BUS	
	GMC TRUCK	
	INTERNATIONAL (NAVISTAR)	
	NEWAY (HOLLAND) SUSPENSION	
	OSHKOSH MOTORS	
	SPARTAN MOTORS	
	VOLVO	
85735	**N**	
	CHEVROLET TRUCK	
	GMC TRUCK	
	GREYHOUND BUS	
	MOTOR COACH INDUSTRIES	
	PACIFIC TRUCK & TRAILER	
	VOLVO	
	WESTERN UNIT "STABILAIRE"	
85736	**N**	
	BLUEBIRD SCHOOL BUS	
	FLXIBLE BUS	
	MOHAWK	
	PREVOST	
	THOMAS SCHOOL BUS	

GABRIEL #	APPLICATION	MTG. ACC PKG. NO.
85737	**N**	**Not Req'd**
	MERITOR	
85738	**N**	**Not Req'd.**
	HENDRICKSON TRAILER SUSPENSION	
	REYCO SUSPENSION	
85900		**145054(2)**
	KENWORTH	
85901		**401754(4)**
	FREIGHTLINER	
	RIDEWELL CORPORATION	
85902		**145054(2)**
	KENWORTH	
85903		**Not Req'd.**
	HENDRICKSON TRUCK SUSPENSION	
85904		**Not Req'd.**
	FREIGHTLINER CUSTOM CHASSIS	
	HENDRICKSON TRUCK SUSPENSIONSYSTEMS	
85905		**401754(4)**
	NEWAY (HOLLAND) SUSPENSIONSYSTEMS	
85906		**Not Req'd.**
	FORD	
	MACK	
	NEWAY (HOLLAND) SUSPENSION	
	VOLVO	
	WESTERN STAR	
85907		**Not Req'd.**
	NEWAY (HOLLAND) SUSPENSION	
85908		**Not Req'd.**
	NEWAY (HOLLAND) SUSPENSIONSYSTEMS	
85909		**Not Req'd.**
	FORD	
	KENWORTH	
	MACK	
	NEWAY (HOLLAND) SUSPENSIONSYSTEMS	
85910		**Not Req'd.**
	NEWAY (HOLLAND) SUSPENSION	
	PETERBILT	
85911		**Not Req'd.**
	HENDRICKSON TRAILER SUSPENSIONSYSTEMS	
	NEWAY (HOLLAND) SUSPENSION	
85912		**401754(2)**
	NEWAY (HOLLAND) SUSPENSION	
85913		**401754(2)**
	NEWAY (HOLLAND) SUSPENSIONSYSTEMS	
85914		**Not Req'd.**
	BLUEBIRD SCHOOL BUS	
	NEWAY (HOLLAND) SUSPENSION	
85915	**S Obsolete**	**401754(2)**
	NEWAY (HOLLAND) SUSPENSIONSYSTEMS	
85916		**Not Req'd.**
	NEWAY (HOLLAND) SUSPENSIONSYSTEMS	
85918		**Not Req'd.**
	FREIGHTLINER	
85919		**Not Req'd.**
	BLUEBIRD SCHOOL BUS	
	MERITOR	
	WABASH TRAILER	
	WORKHORSE	

GABRIEL #	APPLICATION	MTG. ACC PKG. NO.
85920		**Not Req'd.**
	FREIGHTLINER	
85921		**145054**
	FREIGHTLINER	
85923	**N**	
	INTERNATIONAL (NAVISTAR)	
85924	**N**	
	INTERNATIONAL (NAVISTAR)	
85925	**N**	
	INTERNATIONAL (NAVISTAR)	
85926	**N**	
	INTERNATIONAL (NAVISTAR)	
85927	**N**	
	INTERNATIONAL (NAVISTAR)	
85928	**N**	
	INTERNATIONAL (NAVISTAR)	
85929	**N**	
	INTERNATIONAL (NAVISTAR)	
85930	**N**	
	INTERNATIONAL (NAVISTAR)	
85931	**N**	
	INTERNATIONAL (NAVISTAR)	
85932	**N**	**Not Req'd.**
	FREIGHTLINER	
	HENDRICKSON TRUCK SUSPENSION	
85933	**N**	**Not Req'd.**
	HENDRICKSON TRUCK SUSPENSION	
	VOLVO	
85934	**N**	**Not Req'd.**
	RIDEWELL CORPORATION	
85935	**N**	**145090(1)**
	INTERNATIONAL (NAVISTAR)	
85936	**N**	**145089-200(1)**
	KENWORTH	
85937	**N**	**145089-200(1)**
	KENWORTH	
85938	**N**	**Not Req'd.**
	HENDRICKSON TRAILER SUSPENSIONSYSTEMS	
	WATSON & CHALIN MFG. INC.	
85939	**N**	**Not Req'd.**
	HENDRICKSON TRAILER SUSPENSION	
	TIMBREN INDUSTRIES	
87001	**S 85734**	**401754(4)**
	RIDEWELL CORPORATION	
87015		
	MERITOR	

GasSLX

89401		**140149**
	FORD	
	MAECO	
	STERLING TRUCK	
89402		**140149**
	FORD	
	STERLING TRUCK	
89403		**140149**
	FORD	

NUMERICAL LISTING
LISTA NUMÉRICA
LISTE NUMÉRIQUE

GABRIEL #	APPLICATION	MTG. ACC PKG. NO.
89405		**Not Req'd.**
	FORD	
	HENDRICKSON TRUCK SUSPENSIONSYSTEMS	
	INTERNATIONAL (NAVISTAR)	
	KENWORTH	
	MACK	
	MARMON	
	NEWAY (HOLLAND) SUSPENSION	
	PETERBILT	
	REYCO SUSPENSION	
	VOLVO	
	WATSON & CHALIN MFG. INC.	
89406		**Not Req'd.**
	ALLCO TRAILER	
	CHEVROLET TRUCK	
	FORD	
	FRUEHAUF	
	GILLIG BROS.	
	GMC TRUCK	
	GREAT DANE TRAILER	
	HENDRICKSON TRUCK SUSPENSION	
	LODAL, INC.	
	MACK	
	MAECO	
	MARMON	
	NEWAY (HOLLAND) SUSPENSIONSYSTEMS	
	OSHKOSH MOTORS	
	REYCO SUSPENSION	
	VOLVO	
	VOLVO-AUTOCAR	
	WESTERN STAR	
89407		**Not Req'd.**
	BENSON TRUCK BODIES INC.	
	BLUEBIRD SCHOOL BUS	
	BROCKWAY SCHOOL BUS	
	CHANCE BUS	
	CHEVROLET TRUCK	
	DURA SUSPENSION	
	FORD	
	GMC TRUCK	
	GREAT DANE TRAILER	
	HARDEE MFG	
	HENDRICKSON TRUCK SUSPENSIONSYSTEMS	
	HIGHWAY PRODUCT	
	INTERNATIONAL (NAVISTAR)	
	KENWORTH	
	MACK	
	MAECO	
	MOHAWK	
	NATIONAL COACH CORP	
	NEWAY (HOLLAND) SUSPENSIONSYSTEMS	
	OSHKOSH MOTORS	
	REYCO SUSPENSION	
	RIDEWELL CORPORATION	
	TRAILMOBILE CANADA CORP.	
	TWIN COACH	
	VOLVO	
89408		**145080**
	PETERBILT	
89409		**140149**
	FORD	
	KENWORTH	
	OSHKOSH MOTORS	
	VOLVO	

GABRIEL #	APPLICATION	MTG. ACC PKG. NO.
89410		**401754(4)**
	FORD	
	KENWORTH	
	MACK	
	REYCO SUSPENSION	
	STERLING TRUCK	
	VOLVO	
89411		**Not Req'd.**
	INTERNATIONAL (NAVISTAR)	
	MARMON	
	REYCO SUSPENSION	
	VOLVO	
89412		**401754(4)**
	FREIGHTLINER	
	KENWORTH	
	MACK	
	VOLVO	
89413		**145080**
	BLUEBIRD SCHOOL BUS	
	BROCKWAY SCHOOL BUS	
	CHEVROLET TRUCK	
	FORD	
	GMC TRUCK	
	INTERNATIONAL (NAVISTAR)	
	ISUZU	
	PETERBILT	
	VOLVO	
89414		**Not Req'd.**
	BLUEBIRD SCHOOL BUS	
	CHEVROLET TRUCK	
	FORD	
	GMC TRUCK	
	HENDRICKSON TRAILER SUSPENSIONSYSTEMS	
	HENDRICKSON TRUCK SUSPENSION	
	INTERNATIONAL (NAVISTAR)	
	MACK	
	MAECO	
	NEWAY (HOLLAND) SUSPENSION	
	PETERBILT	
	REYCO SUSPENSION	
	STERLING TRUCK	
	TRAILMOBILE CANADA CORP.	
	VOLVO	
	WESTERN STAR	
89415		**140149**
	VOLVO	
89416		**140149**
	VOLVO	
	VOLVO-AUTOCAR	
89417		**145054**
	VOLVO	
	VOLVO-AUTOCAR	
89418		**145054**
	INTERNATIONAL (NAVISTAR)	
	VOLVO	
	VOLVO-AUTOCAR	

GABRIEL #	APPLICATION	MTG. ACC PKG. NO.
89419		**401754(4)**
	CHEVROLET TRUCK	
	FREIGHTLINER	
	FRUEHAUF	
	GMC TRUCK	
	GRANNING SUSPENSION	
	HOBBS TRAILERS	
	INTERNATIONAL (NAVISTAR)	
	MUNCIE RECLAMATION	
	NEWAY (HOLLAND) SUSPENSION	
	OSHKOSH MOTORS	
	OSTERLUND TRUCK	
	OTTAWA TRUCK	
	REYCO SUSPENSION	
	VOLVO	
	WATSON & CHALIN MFG. INC.	
	WESTERN UNIT "STABILAIRE"SUSPENSION	
89420		**401754(4)**
	AM GENERAL	
	CHEVROLET TRUCK	
	CRANE CARRIER	
	DINA BUS	
	FORD	
	FREIGHTLINER	
	FWD TRUCK	
	GILLIG BROS.	
	GMC TRUCK	
	MACK	
	MAECO	
	PETERBILT	
	VOLVO	
89422		**401754(4)**
	ACF BRILL BUS	
	CHEVROLET TRUCK	
	EAGLE MOTOR COACH	
	FREIGHTLINER	
	GMC TRUCK	
	INTERNATIONAL (NAVISTAR)	
	MACK	
	MAECO	
	MOHAWK	
	ORION BUS INDUSTRIES	
	PETERBILT	
	PREVOST	
	THOMAS SCHOOL BUS	
	TRANSPORTATION MFG. CORP	
	VOLVO	
	WESTERN UNIT "STABILAIRE"SUSPENSION	
89423		**141108**
	KENWORTH	
	OTTAWA TRUCK	
	VOLVO	
89424		**141247**
	FLXIBLE BUS	
	INTERNATIONAL (NAVISTAR)	
	PETERBILT	
	VOLVO	
89425		**401754(4)**
	EAGLE MOTOR COACH	
	FORD	
	KENWORTH	
	STERLING TRUCK	
	VOLVO	
89426		**145090**
	INTERNATIONAL (NAVISTAR)	
	MAECO	
	OSHKOSH MOTORS	

NUMERICAL LISTING
LISTA NUMÉRICA
LISTE NUMÉRIQUE

GABRIEL #	APPLICATION	MTG. ACC PKG. NO.
89427		**145099**
	PETERBILT	
89428		**145089-000**
	FREIGHTLINER	
	VOLVO	
89429		**401754(4)**
	FREIGHTLINER	
	MAECO	
89430		**Not Req'd.**
	CHEVROLET TRUCK	
	FORD	
	FREIGHTLINER CUSTOM CHASSIS	
	GMC TRUCK	
	HENDRICKSON TRAILER SUSPENSION	
	HENDRICKSON TRUCK SUSPENSIONSYSTEMS	
	HINO	
	INTERNATIONAL (NAVISTAR)	
	MACK	
	NEWAY (HOLLAND) SUSPENSIONSYSTEMS	
	OSHKOSH MOTORS	
	REYCO SUSPENSION	
	RIDEWELL CORPORATION	
	VOLVO	
	VOLVO-AUTOCAR	
	WATSON & CHALIN MFG. INC.	
89431		**Not Req'd.**
	INTERNATIONAL (NAVISTAR)	
	OSHKOSH MOTORS	
89432		**Not Req'd.**
	BLUEBIRD SCHOOL BUS	
	MAECO	
89434		**140149**
	VOLVO	
	VOLVO-AUTOCAR	
89435		**140149**
	FORD	
	STERLING TRUCK	
	VOLVO	

GABRIEL #	APPLICATION	MTG. ACC PKG. NO.
89436		**Not Req'd.**
	BENSON TRUCK BODIES INC.	
	CHANCE BUS	
	CHEVROLET TRUCK	
	DURA SUSPENSION	
	EAST TRAILER	
	FREIGHTLINER	
	FRUEHAUF	
	GMC TRUCK	
	HENDRICKSON TRAILER SUSPENSION	
	HENDRICKSON TRUCK SUSPENSIONSYSTEMS	
	HIGHWAY PRODUCT	
	HUTCHENS SUSPENSION	
	MACK	
	MOHAWK	
	NEWAY (HOLLAND) SUSPENSION	
	ORION BUS INDUSTRIES	
	PAGE SUSPENSION	
	REYCO SUSPENSION	
	RIDEWELL CORPORATION	
	STOUGHTON TRAILERS INC.	
	THOMAS SCHOOL BUS	
	TRAILMOBILE CANADA CORP.	
	TWIN COACH	
	VOLVO	
	WATSON & CHALIN MFG. INC.	
89437		**Not Req'd.**
	HENDRICKSON TRAILER SUSPENSIONSYSTEMS	
	NEWAY (HOLLAND) SUSPENSION	
	THOMAS SCHOOL BUS	
89438		**145080(2)**
	FORD	
	STERLING TRUCK	
89439		**145080(2)**
	FORD	
	STERLING TRUCK	
89440		**Not Req'd.**
	BLUEBIRD SCHOOL BUS	
	FORD	
	FRUEHAUF	
	HENDRICKSON TRAILER SUSPENSIONSYSTEMS	
	HENDRICKSON TRUCK SUSPENSION	
	INTERNATIONAL (NAVISTAR)	
	KENWORTH	
	MAECO	
	OSHKOSH MOTORS	
	PACIFIC TRUCK & TRAILER	
	REYCO SUSPENSION	
	STERLING TRUCK	
	VOLVO	

GABRIEL #	APPLICATION	MTG. ACC PKG. NO.
89441		**145054**
	FORD	
	NEWAY (HOLLAND) SUSPENSIONSYSTEMS	
89442		**145126(2)**
	WESTERN STAR	
89443	**N**	**Not Req'd.**
	FREIGHTLINER	
	STERLING TRUCK	
89446		**401011(4)**
	FORD	
	INTERNATIONAL (NAVISTAR)	
	STERLING TRUCK	
	VOLVO	
89447		**141108**
	BLUEBIRD SCHOOL BUS	
	INTERNATIONAL (NAVISTAR)	
	MITSUBISHI-FUSO	
	VOLVO	
89448		**Not Req'd.**
	VOLVO	
89449		**Not Req'd.**
	FREIGHTLINER	
89450		**145132**
	MACK	
	VOLVO	
89451	**N**	
	KENWORTH	
	PETERBILT	
89453	**N**	**Not Req'd.**
	FREIGHTLINER	
	HENDRICKSON TRUCK SUSPENSIONSYSTEMS	
89454	**N**	**Not Req'd.**
	HENDRICKSON TRUCK SUSPENSION	
	VOLVO	
89455	**N**	**141108(1)**
	PETERBILT	
89456	**N**	**145089-200(1)**
	KENWORTH	

Competitive Interchange List

Piezas de substitución de competidores

Articles concurrents

ARALMEX

Aralmex	Gabriel	Upgrade
2AMG037	G60076	
3AMG001	G60014	
3AMG004	G60021	
3AMG005	G60017	
3AMG006	G60042	

Aralmex	Gabriel	Upgrade
3AMG007	G60015	
3AMG008	G60114	
3AMG009	G60007	
3AMG021	G60035	
3AMG022	G60077	

Aralmex	Gabriel	Upgrade
3AMG023	G60049	
3AMG026	G60080	
3AMG027	G60062	
3AMG029	G60097	
3AMG030	G60302	

Aralmex	Gabriel	Upgrade
3AMG031	G60043	
3AMG032	G60120	
3AMG033	G60171	
3AMG034	G60162	
3AMG035	G60161	

COFAP

Cofap	Gabriel	Upgrade
45011	85702	
8482	85026	89417
ATG-046	G60078	

Cofap	Gabriel	Upgrade
ATG-051	G60062	
ATG-081	G60120	
ATG-084	G60162	

Cofap	Gabriel	Upgrade
ATG-085	G60161	
L-12039	85065	

Cofap	Gabriel	Upgrade
L-12687	83030	
L-12703	85071	

DELCO

Delco	Gabriel	Upgrade
501-13	83318	
501-74	83304	
501-75	83303	
507-1	85304	
507-10	85711	
507-11	85308	
507-12	85701	
507-13	85704	
507-15	85703	
507-16	85702	
507-17	85304	
507-18	85305	
507-19	85700	
507-2	85302	89420
507-24	85336	
507-3	85307	
507-4	85303	
507-5	85308	89422
507-6	85314	89425
	85305	
507-7	85301	
507-8	85301	

Delco	Gabriel	Upgrade
507-9	85700	
508-13	83219	
	85012	
508-14	85012	
	83216	
508-15	83216	
508-16	83308	
508-17	83312	
508-18	83309	
508-19	83314	
508-20	83207	
508-21	83214	
508-22	83217	
508-23	83217	
	83225	
508-24	83215	
508-26	85030	
	83203	
508-28	83207	
508-29	85030	
508-3	83400	
508-30	85005	

Delco	Gabriel	Upgrade
508-35	G60021	
	G60045	
508-39	G60008	
508-42	G60012	
	G60029	
508-47	G60042	
	G60011	
508-48	G60035	
	G60063	
508-5	G60017	
	G60043	
508-50	G60003	
	G60308	
508-52	G60101	
	G60031	
	G60075	
508-56	G60119	
508-57	83123	89405
508-59	G60028	
508-68	85006	
	83209	

Delco	Gabriel	Upgrade
508-70	G60026	
	G60041	
508-71	G60046	
	83314	
508-72	G60023	
508-74	G60024	
	G60030	
508-78	83400	
508-79	G60052	
508-80	G60053	
508-82	G60033	
508-87	85071	
508-9	85000	89436
	83203	89436
550-13	85005	89430
550-73	83303	
	85005	89430
550-74	83304	
550-75	83303	
550-77	83221	

FLEETRITE

Fleetrite	Gabriel	Upgrade	Applications	OE Number
AMS600101	85003*	89411		
AMS600102	83122	89406		
	85005*	89430		
AMS600103	83207	89407		
	85000*	89436		

Fleetrite	Gabriel	Upgrade	Applications	OE Number
AMS600104	83203			
	85000*	89436		
AMS600105	83304			
AMS600106	83312	89409		
	85010*			

Important Note: Competitive Interchanges are to be used for stocking purposes only. **Where multiple crosses are identified, please reference the applications section of this catalog./ Remarque importante**: Les interchanges concurrentiels ne s'utilisent qu'aux fins de stocks. **Dans le cas de références multiples, consulter la section des applications du catalogue**. / **Nota Importante**: Se pueden usar intercambios competitivos para propósitos de almacenamiento solamente. **Cuando se identifican intercambios múltiples, consulte la sección de aplicaciones de este catálogo**.

* Although the competitive product is a 1-3/8" small bore design, Meritor recommends replacement with our 1-5/8" large bore product due to the high durability requirements of this application. / Bien que le produit concurrent ait un petit alésage de 1-3/8 po, Meritor recommande l'utilisation de son produit à grand alésage de 1-5/8 po car cette application exige une grande durabilité. / Aunque el producto competitivo es de un diseño de diámetro interior pequeño de 1-3/8 pulg., Meritor recomienda el reemplazo con un producto de diámetro interior más grande de 1-5/8 pulg. debido a los elevados requerimientos de durabilidad de esta aplicación.

Competitive Interchange List

Piezas de substitución de competidores

Articles concurrents

FLEETRITE ....cont'd

Fleetrite	Gabriel	Upgrade	Applications	OE Number
AMS600107	83309			
AMS600108	83209	89414		
	85005*	89430		
	85013*	89414		
AMS600109	83225			
	85053*	89442		
AMS600110	83303			
AMS600111	83301			
AMS600112	83300			
AMS600113	83215			
AMS600114	83125			
AMS600116	83216			
AMS600117	83308			
AMS600118	83219			
AMS600119	83314			
AMS600120	G60119			
AMS600123	G60028			
AMS600125	83123	89405		
AMS600126	83400			
AMS600128	83401			
AMS600129	83317			
AMS600130	83204			
	85029*			
AMS600131	83318			
AMS600132	83215			
AMS600133	83215			
	83362			
AMS600134	85011*			
	85030*	89440		
AMS600136	83353			
AMS600138	83100			
AMS600142	83209	89414		
AMS600145	85040*	85901		
AMS600146	83105			
AMS600147	83216			
AMS600148	85026*	89417		
AMS600149	83217			
	85042*			
AMS600150	85009*			
AMS600151	85024*	89416		
AMS600152	83242			
AMS600153	83100			
	85003*			
AMS600154	83104			
AMS600155	83103			

Fleetrite	Gabriel	Upgrade	Applications	OE Number
AMS600156	83103			
AMS600157	83221			
AMS600158	605337			
AMS600162	83103			
AMS600163	83101			
AMS600164	83613			
AMS600165	83636			
AMS600166	85052*			
AMS600167	83203			
	85000*	89436		
AMS600168	83635			
AMS600169	85051*			
AMS600172	85005*	89430		
AMS600173	85043*			
AMS600174	83125			
	85006*			
AMS650101	85012	89413		
	85062	89408		
AMS650102	85001	89410		
AMS650103	83215		Mack	
	85053	89442	Western Star	
	85303		International (Navistar)	
	85314	89425	Ford / Sterling	
	85320	89429	Freightliner	
AMS650105	85026	89417		
AMS650107	85316	89426	International (Navistar)	
	85333		International (Navistar)	
AMS650108	85030	89432		
AMS650109	85058	89431		
AMS650110	85005	89430		
AMS650111	85006	89401		
AMS650112	89402			
AMS650113	85012	89413		
AMS650114	85006	89401	Ford	
	89403		Ford	
AMS650115	85027	89418		
AMS650116	83132		Ford	
	85007	89412	Mack	
	85303	89422	Prevost	
	85304		GMC Truck	
AMS650118	83215		Others	
	83362		Hino	
AMS650119	85029			
AMS650120	85010			
AMS650121	89432			

Important Note: Competitive Interchanges are to be used for stocking purposes only. **Where multiple crosses are identified, please reference the applications section of this catalog./ Remarque importante**: Les interchanges concurrentiels ne s'utilisent qu'aux fins de stocks. **Dans le cas de références multiples, consulter la section des applications du catalogue**. / **Nota Importante**: Se pueden usar intercambios competitivos para propósitos de almacenamiento solamente. **Cuando se identifican intercambios múltiples, consulte la sección de aplicaciones de este catálogo**.

* Although the competitive product is a 1-3/8" small bore design, Meritor recommends replacement with our 1-5/8" large bore product due to the high durability requirements of this application. / Bien que le produit concurrent ait un petit alésage de 1-3/8 po, Meritor recommande l'utilisation de son produit à grand alésage de 1-5/8 po car cette application exige une grande durabilité. / Aunque el producto competitivo es de un diseño de diámetro interior pequeño de 1-3/8 pulg., Meritor recomienda el reemplazo con un producto de diámetro interior más grande de 1-5/8 pulg. debido a los elevados requerimientos de durabilidad de esta aplicación.

Competitive Interchange List

Piezas de substitución de competidores

Articles concurrents

FLEETRITE ....cont'd

Fleetrite	Gabriel	Upgrade	Applications	OE Number
AMS650122	85063			
AMS650123	85054	89438		
AMS650124	85053	89442		
AMS650128	85031			
AMS650129	85701			
AMS650130	85061	89450		
AMS650139	85918	89449		
AMS650400	85033	89427		
AMS650401	83314		Ford	
	85013	89414	Others	
AMS650402	85311	89424		
AMS650404	85310	89423	Kenworth	
	85326		Peterbilt	
AMS650405	85023	89415		
AMS650406	85024	89416		
AMS650407	85007	89412	Freightliner	
	87002		Bus App's	
AMS650408	85319	89428		
AMS650409	85003	89411		
AMS650410	85300	89419		
AMS650411	83123	89405	Hendrickson	
	83309	89446	Ford	
	85036	89405	Peterbilt	
AMS650412	83122	89406		
AMS650415	85046	89434		
AMS650416	85000	89436	Standard	
	85323	89436	Hvy Duty	
AMS650417	85322			
AMS650418	85906		Neway	
	89441		Ford	
AMS650419	85000	89436	Hendrickson	
	85911		Neway	
AMS650420	83121		Hendrickson	
	85013	89414	Others	
AMS650421	85005	89430	Ridewell Corporation	
	85030	89440	Bluebird School Bus	
	85321		Fruehauf	
	85916		Neway	
AMS650422	85912			
AMS650423	85040		Ford	
	85907		Neway	
AMS650424	85905			
AMS650425	89441			
AMS650426	85054	89438		
AMS650427	85903			
AMS650428	85321			
AMS650429	85030		Ford	
	85055	89439	Ford	
AMS650430	85712			
AMS650431	85909			
AMS650432	85910			
AMS650433	85910		Neway	
	89437		Neway	
AMS650434	85012	89413		
AMS650435	85901			
AMS650436	85900			
AMS650439	85716		Dina Bus	
	85718		FIxible Bus	
AMS650440	85711			
AMS650441	85700		Motor Coach Industries	
	85701		FIxible Bus	
	85704		Ridewell Corporation	
AMS650442	85313		Gmc Truck	
	85314	89425	Kenworth	
	85700		Nova Bus	
	85714		Orion Bus Industries	
	87004		Motor Coach Industries	
AMS650443	85705		Neoplan Bus	
	85706		Neoplan Bus	
	85707		FIxible Bus	
AMS650444	85311	89424	International (Navistar)	
	85311	89424	Peterbilt	
	85710		Nova Bus	
	85710		Gmc Truck	
AMS650445	85731			
AMS650446	85704		FIxible Bus	
	85730		FIxible Bus	
AMS650447	85703			
AMS650448	85700			
AMS650449	85702		Nova Bus	
	85716		Dina Bus	
AMS650451	85029			
AMS650452	85312		Motor Coach Industries	
	85733		FIxible Bus	
AMS650453	85904			
AMS650454	85713			
AMS650455	85716		FIxible Bus	
	85718		Orion Bus Industries	
AMS650456	85376			
AMS650458	85908			

Important Note: Competitive Interchanges are to be used for stocking purposes only. **Where multiple crosses are identified, please reference the applications section of this catalog./ Remarque importante**: Les interchanges concurrentiels ne s'utilisent qu'aux fins de stocks. **Dans le cas de références multiples, consulter la section des applications du catalogue**. / **Nota Importante**: Se pueden usar intercambios competitivos para propósitos de almacenamiento solamente. **Cuando se identifican intercambios múltiples, consulte la sección de aplicaciones de este catálogo**.

* Although the competitive product is a 1-3/8" small bore design, Meritor recommends replacement with our 1-5/8" large bore product due to the high durability requirements of this application. / Bien que le produit concurrent ait un petit alésage de 1-3/8 po, Meritor recommande l'utilisation de son produit à grand alésage de 1-5/8 po car cette application exige une grande durabilité. / Aunque el producto competitivo es de un diseño de diámetro interior pequeño de 1-3/8 pulg., Meritor recomienda el reemplazo con un producto de diámetro interior más grande de 1-5/8 pulg. debido a los elevados requerimientos de durabilidad de esta aplicación.

Competitive Interchange List

Piezas de substitución de competidores

Articles concurrents

FLEETRITE ....cont'd

Fleetrite	Gabriel	Upgrade	Applications	OE Number
AMS650459	85006		Bluebird School Bus	
	85043		Hendrickson	
AMS650461	85915			
AMS650462	85913			
AMS650463	85040			
AMS650464	85716			
AMS650465	85914			
AMS650466	85024	89416	Volvo	
	85047	89435	Volvo	
AMS650468	85069		Peterbilt	
	85705		Neoplan Bus	
AMS650471	85302	89420		
AMS650472	85330			
AMS650473	85329		Prevost	
	85713		Nova Bus	
AMS650474	85712			
AMS650475	85065			
AMS650478	85030	89440	Hendrickson	
	85058		Freightliner	
AMS650479	83122	89406		
AMS650480	83109		Ford	
	83111		Mack	
AMS650481	83123	89405		
AMS650482	83125		Hendrickson	
	85006		Freightliner	
AMS650486	85066	89448		
AMS660102	83122			
	85005*	89430		
AMS660103	83124	89407	Std	
	85014*		Hvy Duty	
AMS660104	83115		Trailmobile Canada Corp.	
	83203	89436	Std	
	85000*	89436	Hvy Duty	
AMS660105	83304			
AMS660106	83312	89409		
AMS660107	83309	89446		
AMS660108	83209	89414	Std	
	85013*	89414	Hvy Duty	
AMS660109	83217			
	83225			
	85007*	89412		
	85053*	89442	Western Star	
AMS660110	83303			
AMS660111	83301			
AMS660112	83102		Thomas School Bus	
	83456	89447	International (Navistar)	
AMS660113	83215		Std	
	85001*	89410	Hvy Duty	
AMS660114	83125			
	85006*			
AMS660116	83216			
AMS660117	83308		Others	
	85308	89422	Orion Bus Industries	
AMS660118	83219		Ford	
	85012*	89413	International (Navistar)	
AMS660119	83314			
AMS660123	G60028			
AMS660125	83123	89405	Others	
	85010		Hendrickson	
AMS660126	83400			
AMS660128	83401			
AMS660129	83317			
AMS660130	83204		Others	
	85029*		Hendrickson	
	85060		Chalmers Suspension	
AMS660131	83318			
AMS660132	83215		Others	
	85007*	89412	Kenworth	
AMS660133	83215			
	83362			
AMS660134	83221		Mack	
	85011*		Freightliner	
	85030*	89440	Others	
AMS660136	83353			
AMS660138	83100			
AMS660142	83209	89414		
AMS660145	85040*			
AMS660146	83105			
AMS660147	83216			
AMS660148	85026*	89417		
AMS660149	83217		Hino	
	85042*		Freightliner	
AMS660150	85009*		Mitsubishi-Fuso	
	85012*	89413	Isuzu	
	G60177		Isuzu	
AMS660153	83100		International (Navistar)	
	85003*	89411	Marmon	
AMS660154	83104			

Important Note: Competitive Interchanges are to be used for stocking purposes only. **Where multiple crosses are identified, please reference the applications section of this catalog./ Remarque importante**: Les interchanges concurrentiels ne s'utilisent qu'aux fins de stocks. **Dans le cas de références multiples, consulter la section des applications du catalogue**. / **Nota Importante**: Se pueden usar intercambios competitivos para propósitos de almacenamiento solamente. **Cuando se identifican intercambios múltiples, consulte la sección de aplicaciones de este catálogo**.

* Although the competitive product is a 1-3/8" small bore design, Meritor recommends replacement with our 1-5/8" large bore product due to the high durability requirements of this application. / Bien que le produit concurrent ait un petit alésage de 1-3/8 po, Meritor recommande l'utilisation de son produit à grand alésage de 1-5/8 po car cette application exige une grande durabilité. / Aunque el producto competitivo es de un diseño de diámetro interior pequeño de 1-3/8 pulg., Meritor recomienda el reemplazo con un producto de diámetro interior más grande de 1-5/8 pulg. debido a los elevados requerimientos de durabilidad de esta aplicación.

Competitive Interchange List

Piezas de substitución de competidores

Articles concurrents

FLEETRITE ....cont'd

Fleetrite	Gabriel	Upgrade	Applications	OE Number
AMS660157	83221		Others	
	85053*	89442	Western Star	
AMS660160	83114			
AMS660161	G60164			
AMS660162	83103			
AMS660164	83613			
AMS660165	83636			
AMS660166	85052*			
AMS660167	83128			
AMS660168	83635			
AMS660169	85051*			
AMS660170	83016			
AMS660171	83017			
AMS660172	83122	89406	Neway Suspension Systems	90044688
	83126	89430	Neway Suspension Systems	90044626
AMS660173	85043*			
AMS660174	83125			
AMS660175	83120			
AMS660176	83018			
AMS660177	83019			
AMS660182	83004			
AMS660183	83114		Gmc Truck	
	85012*	89413	Gmc Truck	
AMS660187	85049*			
AMS660188	85045*			
AMS660189	83106		Gmc Truck	15588554
	83136		Gmc Truck	88982682
	83219		Volvo	
AMS660190	83107			
AMS660191	83216			
	83308		Ford	
AMS660192	85001*	89410		
AMS660193	83001			
AMS660194	83127		Neway Suspension Systems	90044794
	83207	89407	Neway Suspension Systems	90044769
AMS660195	83130			
	85000*	89436		
AMS660196	G60107			
AMS660198	83007			
AMS660200	83008			
AMS660201	83308	89435	Ford	
	85047*	89435	Ford	
AMS660202	83009			
AMS660203	83112			
AMS660204	83010			
AMS660205	83003			
AMS660208	G60177			
AMS660209	83014			
AMS660211	83110			
AMS660212	83015			
AMS660213	85009*			
AMS660214	83002			
AMS660215	85059*			
AMS660216	83123	89405		
AMS660218	83121			
AMS660219	83215			
AMS660220	83109			
AMS660223	85055*	89439		
AMS660224	83111			
AMS660225	83200			
AMS660232	83114			
AMS660233	83023			
AMS660234	83013			
AMS660236	83025			
AMS660237	83005			
AMS660238	83101			
AMS660244	83125			
	85006*			
AMS660247	83116		Freightliner Custom Chassis	P117253
	83118		Freightliner Custom Chassis	P117146
AMS660248	83117			
AMS660502	630811			
	632155			
AMS660504	632147			
AMS700101	85308	89422	Others	
	85713		Crane Carrier	
AMS700102	85303		Others	
	85308	89422	Prevost Bus	
AMS700103	85302	89420	Crane Carrier	
	85307		Bluebird School Bus	
AMS700104	85304		Beck Bus	
	85712		Flxible Bus	
AMS700105	85305			
	85314	89425		
AMS700106	85301			
AMS700107	85307		Others	
	85702		Ridewell Corporation	
AMS700108	85315			
AMS700112	85722			
AMS700113	87006			

Important Note: Competitive Interchanges are to be used for stocking purposes only. **Where multiple crosses are identified, please reference the applications section of this catalog./ Remarque importante**: Les interchanges concurrentiels ne s'utilisent qu'aux fins de stocks. **Dans le cas de références multiples, consulter la section des applications du catalogue**. / **Nota Importante**: Se pueden usar intercambios competitivos para propósitos de almacenamiento solamente. **Cuando se identifican intercambios múltiples, consulte la sección de aplicaciones de este catálogo**.

* Although the competitive product is a 1-3/8" small bore design, Meritor recommends replacement with our 1-5/8" large bore product due to the high durability requirements of this application. / Bien que le produit concurrent ait un petit alésage de 1-3/8 po, Meritor recommande l'utilisation de son produit à grand alésage de 1-5/8 po car cette application exige une grande durabilité. / Aunque el producto competitivo es de un diseño de diámetro interior pequeño de 1-3/8 pulg., Meritor recomienda el reemplazo con un producto de diámetro interior más grande de 1-5/8 pulg. debido a los elevados requerimientos de durabilidad de esta aplicación.

Competitive Interchange List

Piezas de substitución de competidores

Articles concurrents

FLEETRITE ....cont'd

Fleetrite	Gabriel	Upgrade	Applications	OE Number
AMS700114	85701			
AMS700115	85712			
AMS700116	85325			
AMS700117	85324			
AMS700119	85326			
AMS700120	85332			
AMS700121	85328			
AMS700401	85700		Mci	
	85715		Orion Bus Industries	
AMS700402	85310	89423		
AMS700403	85702			
AMS700404	85311	89424		
AMS700405	85300	89419		
AMS700406	85711			
AMS700407	85004		Std	
	85712		Hvy Duty	
AMS700408	85704			
AMS700410	85314	89425		
AMS700411	85703			
AMS700413	85705		Neoplan Bus	
	85728		Motor Coach Industries	
AMS700414	85723			
AMS700415	85318			
AMS700416	85709			

Fleetrite	Gabriel	Upgrade	Applications	OE Number
AMS700418	85003	89411		
AMS700419	85027	89418	International (Navistar)	
	85708		Bus App's	
AMS700420	85733			
AMS700421	85712			
AMS700422	85308	89422		
AMS700423	85724	89443		
AMS700424	85333			
AMS85722	83400			
AMS85736	G60113			
AMS85768	83209	89414		
AMS85802	83216			
	G60107			
AMS85803	G60021			
AMS85821	G60007			
AMS85853	G60028			
AMS85895	83207	89407		
AMS85900	G60023			
AMS85901	G60024			
AMS85904	G60003			
AMS85905	G60031			
AMS85909	G60046			
AMS85932	G60046			
AMS85960	G60044			

KONI

Koni	Gabriel	Upgrade
30-1348	G60264	
	G60052	
30-1350	G60129	
30-1351	G60099	
30-1365	G60165	
30-1366	G60164	
30-1381	G60062	
30-1421	G60153	
30-1422	G60154	
30-1456	G61122	
	G61122	
30-1457	G61121	
	G61121	
30-1501	G60162	
30-1502	G60161	
	G60222	
30-1565	G60250	
30-1566	G60251	
30-1606	G60051	
30-1607	G60050	
30-1614	G60221	

Koni	Gabriel	Upgrade
30-1624	G60052	
30-1627	G60233	
30-1630	G60053	
	G60265	
80-2516	G60049	
80-2517	G60050	
80-2633	G60051	
80-2634	G60050	
82-1952	G60008	
82-1954	G60014	
82-1955	G60010	
82-1969	G60114	
82-1970	G60011	
82-2158	G60015	
82-2345	G60039	
82-2372	G60163	
	G60302	
82-2384	G60097	
	G60196	
8240-1029	G60023	
8240-1054	G60076	

Koni	Gabriel	Upgrade
8240-1055	G60077	
8240-1148	G60263	
88-1417	83312	89409
88-1422	85030	89440
	85302	89420
88-1457-SP1	83209	89414
88-1458-SP2	83122	89406
88-1476	83353	
88-1489	85036	89405
	83123	89405
88-1490	83207	
88-1499	85001	
88-1558	83209	
	85013	
88-1559-SP1	85036	89405
88-1560	85062	89408
88-1561	85012	89413
88-1562	85003	89411
90-1577-SP1	85310	89423
90-1811	85301	
90-1813SP1	85712	

Koni	Gabriel	Upgrade
90-1862	85709	
	85708	
90-1867	85304	
	85007	89412
	85053	89442
90-1868	85307	
90-1896	85302	89420
	85307	
90-1897	85303	
90-1898	83215	
	85314	89425
	85305	
90-1908 SP1	85723	
90-1909	85318	
90-1910	85315	
	85704	
90-1912	85318	
90-1943	85307	
90-1951-SP1	85304	
	87001	
90-1965	85304	

Important Note: Competitive Interchanges are to be used for stocking purposes only. **Where multiple crosses are identified, please reference the applications section of this catalog./ Remarque importante**: Les interchanges concurrentiels ne s'utilisent qu'aux fins de stocks. **Dans le cas de références multiples, consulter la section des applications du catalogue**. / **Nota Importante**: Se pueden usar intercambios competitivos para propósitos de almacenamiento solamente. **Cuando se identifican intercambios múltiples, consulte la sección de aplicaciones de este catálogo**.

Competitive Interchange List

Piezas de substitución de competidores

Articles concurrents

KONI ... cont'd

Koni	Gabriel	Upgrade
90-1974	85311	89424
9020-1042	85708	
90-2148	85304	
90-2164 SP1	85723	

Koni	Gabriel	Upgrade
90-2209	85308	89422
	85303	
	85001	89410
90-2251	85717	
90-2252	85714	

Koni	Gabriel	Upgrade
90-2254	85720	
90-2255	85719	
90-2256	85718	
90-2257	85716	

Koni	Gabriel	Upgrade
90-2433	85710	
90-2434	85702	
90-2575	85700	
90F-1235	85700	

KYB

KYB	Gabriel	Upgrade
343209	G60304	
344040	G60049	
344041	G60050	
344042	G60051	
344043	G60303	
344044	G60308	
344045	G60101	
344046	G60100	
344049	G60038	
344051	G60048	
344054	G60105	
344066	G60017	
	G60043	
344067	G60309	
	G60112	
	G60008	
344068	G60014	
	G60015	
344069	G60114	
344070	G60012	
344072	G60010	
344074	G60028	
344075	G60039	
344076	G60033	
344077	G60035	
	G60063	

KYB	Gabriel	Upgrade
344079	G60084	
344080	G60062	
344081	G60074	
	G60076	
344082	G60078	
	G60077	
344084	G60120	
	G60079	
344085	G60042	
	G60021	
344088	G60052	
344089	G60053	
344091	G60129	
344092	G60099	
344093	G60306	
344094	G60313	
344095	G60083	
	G60110	
344098	G60104	
GK5534	G60164	
KG4613A	G60310	
	G60136	
KG4652A	G60301	
KG5198A	G60160	
KG5401	G60003	
KG5406	G60023	

KYB	Gabriel	Upgrade
KG5417	G60045	
KG5419	G60031	
KG5420	G60044	
KG5421	G60024	
KG5424	G60002	
KG5425	G00007	
KG5426	G60026	
KG5429	G60046	
KG5431	G60030	
KG5438	G60075	
KG5440	G60011	
KG5442	G60186	
KG5444	G60305	
	G60109	
KG5455	G60081	
KG5456	G60041	
KG5462	G60128	
	G60103	
KG5474	G60086	
	G60153	
KG5475	G60154	
KG5476	G60165	
KG5477	G60307	
KG5478	G60098	
KG5479	G60097	

KYB	Gabriel	Upgrade
KG5480	G60302	
	G60163	
KG5482	G60047	
KG5483	G60080	
KG5485	G60197	
KG5487	G60143	
	G60144	
KG5488	G60111	
KG5489	G60171	
	G60161	
KG5490	G60162	
KG5491	G60152	
KG5494	G60180	
KG5495	G60330	
KG5496	G60184	
KG5497	G60182	
KG5498	G60183	
KG5499	G60181	
KG5513	G60029	
KG5534	G60107	
	G60137	
KG5538	G60087	
KG5555	G60312	
KG6403	G60119	
KG6407	G60113	
KG6412	G60185	

Important Note: Competitive Interchanges are to be used for stocking purposes only. **Where multiple crosses are identified, please reference the applications section of this catalog./ Remarque importante**: Les interchanges concurrentiels ne s'utilisent qu'aux fins de stocks. **Dans le cas de références multiples, consulter la section des applications du catalogue**. / **Nota Importante**: Se pueden usar intercambios competitivos para propósitos de almacenamiento solamente. **Cuando se identifican intercambios múltiples, consulte la sección de aplicaciones de este catálogo**.

Competitive Interchange List

Piezas de substitución de competidores

Articles concurrents

MONROE

Monroe	Gabriel	Upgrade
12872	83219	
32186	G60050	
32194	G60051	
34602	G60164	
34612	83017	
34617	83019	
34657	G60259	
34721	83103	
34722	83400	
34729	G60038	
34730	G60023	
34731	G60035	
34732	G60080	
34733	G60179	
34736	G60113	
34738	G60160	
34741	G60098	
34744	G60199	
34745	G60171	
34750	G60017	
34751	G60161	
34758	G60310	
34759	G60184	
34760	G60182	
34761	G60183	
34762	G60196	
34763	G60196	
34768	83209	89414
34776	G60205	
34777	G60206	
34778	G60216	
34787	G60176	
34788	G60177	
34791	G60235	
34793	G60038	
34802	83216	
34803	G60021	
34817	G60014	
34821	G60007	

Monroe	Gabriel	Upgrade
34822	G60045	
34824	G60010	
34826	G60002	
34828	G60103	
34831	G60017	
34832	G60012	
34839	G60015	
34853	G60028	
34854	G60029	
34868	G60043	
34895	83207	89407
34899	G60114	
34900	G60023	
34901	G60024	
34904	G60003	
34905	G60031	
34906	G60026	
34907	G60030	
34909	G60046	
34910	G60039	
34911	G60011	
34912	G60185	
34919	G60112	
34920	G60047	
34926	G60033	
34927	G60035	
34928	G60041	
34929	G60111	
34930	G60084	
34932	G60046	
34935	G60052	
34936	G60053	
34944	G60008	
34953	G60076	
34954	G60087	
34958	G60042	
34959	G60154	
34960	G60044	
34963	G60007	

Monroe	Gabriel	Upgrade
34964	G60048	
34971	G60077	
34972	G60107	
34975	G60129	
34976	G60099	
34983	G60304	
34984	G60163	
34985	G60097	
34990	G60307	
35002	G60158	
35003	G60063	
35005	G60171	
36012	G60051	
36013	G60050	
36019	G60171	
36022	G60144	
36023	G60143	
36024	G60194	
36025	G60197	
36026	G60303	
36027	G60100	
36034	G60164	
36048	G60120	
36055	G60121	
36056	G60122	
36058	G60106	
36093	G60084	
36094	G60114	
36096	G60152	
36098	G60204	
37013	G60144	
37014	G60143	
37015	G60162	
37016	G60194	
37017	G60197	
37019	G60049	
37020	G60051	
37021	G60050	
37022	G60104	

Monroe	Gabriel	Upgrade
37024	G60107	
37026	G60052	
37027	G60053	
37028	G60305	
37029	G60329	
37030	G60086	
37031	G60105	
37032	G60086	
37033	G60154	
37034	G60038	
37035	G60161	
37036	G60033	
37037	G60233	
37038	G60034	
37039	G60048	
37040	G60008	
37041	G60010	
37042	G60307	
37045	G60028	
37046	G60029	
37047	G60310	
37048	G60101	
37049	G60014	
37051	G60079	
37052	G60007	
37053	G60023	
37054	G60023	
37055	G60080	
37058	G60078	
37060	G60181	
37063	G60304	
37065	G60062	
37066	G60313	
37067	G60083	
37068	G60306	
37069	G60110	
37071	G60312	
37072	G60304	
37073	G60308	

Important Note: Competitive Interchanges are to be used for stocking purposes only. **Where multiple crosses are identified, please reference the applications section of this catalog./ Remarque importante**: Les interchanges concurrentiels ne s'utilisent qu'aux fins de stocks. **Dans le cas de références multiples, consulter la section des applications du catalogue**. / **Nota Importante**: Se pueden usar intercambios competitivos para propósitos de almacenamiento solamente. **Cuando se identifican intercambios múltiples, consulte la sección de aplicaciones de este catálogo**.

Competitive Interchange List

Piezas de substitución de competidores

Articles concurrents

MONROE ... cont'd

Monroe	Gabriel	Upgrade
37074	G60180	
37075	660160	
37076	G60199	
37078	G60308	
37080	G60184	
37081	G60052	
37082	G60186	
37085	G60196	
37088	G60114	
37089	G60011	
37090	G60015	
37091	G60039	
37093	G60017	
37094	G60080	
37095	G60038	
37096	G60017	
37099	G60051	
37100	G60305	
37101	G60204	
37102	G60205	
37103	G60206	
37104	G60216	
37105	G60206	
37111	G60338	
37112	G60232	
37116	G60182	
37117	G60183	
37118	G60038	
37119	G60024	
37120	G60129	
37121	G60099	
37123	G60233	
37125	G60304	
37126	G60163	
551002	83122	89406
555011	G60119	
555012	G60028	
555028	83207	89407
555043	83400	

Monroe	Gabriel	Upgrade
557005	85325	
557006	85325	
557013	85910	
557014	89406	
557015	89414	
557021	85051	
557022	85051	
65101	85062	89408
65102	85001	89410
65103	85320	89429
65104	85304	
65105	85026	89417
65106	89407	
65107	85316	89426
65108	85030	89432
65109	85058	89431
65110	85005	89430
65111	85006	89401
65112	89402	
65113	85012	89413
65114	85006	89401
65115	85027	89418
65116	85303	89422
65118	83215	
65119	85029	
65120	85010	
65121	89432	
65122	85063	
65123	85054	89438
65124	85053	89442
65128	85031	
65129	85701	
65130	85061	89450
65133	85935	
65139	85918	89449
65142	83131	
65143	83135	
65144	85928	
65145	85929	

Monroe	Gabriel	Upgrade
65146	85925	
65147	85924	
65148	85918	89449
65153	85921	
65159	85070	
65400	85033	
65401	85013	89414
65402	85311	89424
65404	85310	89423
65405	85023	89415
65406	85024	89416
65407	85736	
65408	85319	89428
65409	85003	89411
65410	85300	89419
65411	85036	89405
65412	83122	89406
65415	85046	89434
65416	85323	89436
65417	85322	
65418	85906	
65419	85000	89436
65420	85013	89414
65421	85916	
65422	85912	
65423	85907	
65424	85905	
65425	89441	
65427	85903	
65428	85321	
65429	85030	89440
65430	85712	
65431	85909	
65432	85910	
65433	85910	
65434	85012	89413
65435	85901	
65436	85900	
65439	85718	

Monroe	Gabriel	Upgrade
65440	85711	
65441	85704	
65442	85700	
65443	85706	
65444	85311	89424
65445	85731	
65446	85730	
65447	85703	
65448	85700	
65449	85736	
65451	85029	
65452	85733	
65453	85904	
65454	85713	
65455	85716	
65456	85376	
65457	85909	
65458	85908	
65459	85043	
65461	85915	
65462	85913	
65463	85040	
65464	85716	
65465	85939	
65466	85047	89435
65467	85054	89438
65468	85069	89455
65471	85302	89420
65472	85330	
65473	85713	
65474	85712	
65475	85065	
65478	85030	89440
65479	83122	89406
65480	83111	
65481	85036	89405
65482	85006	89401
65484	85013	89414
65486	85066	89448

Important Note: Competitive Interchanges are to be used for stocking purposes only. **Where multiple crosses are identified, please reference the applications section of this catalog./ Remarque importante**: Les interchanges concurrentiels ne s'utilisent qu'aux fins de stocks. **Dans le cas de références multiples, consulter la section des applications du catalogue**. / **Nota Importante**: Se pueden usar intercambios competitivos para propósitos de almacenamiento solamente. **Cuando se identifican intercambios múltiples, consulte la sección de aplicaciones de este catálogo**.

Competitive Interchange List

Piezas de substitución de competidores

Articles concurrents

MONROE ... cont'd

Monroe	Gabriel	Upgrade
65487	85927	
65488	85926	
65489	85331	
65490	85724	89443
65491	85930	
65492	85931	
65493	85934	
65494	85933	89454
65495	85067	89451
65496	83138	
65497	85933	89454
65501	85738	
65503	85919	
65504	85072	
65505	83215	
65507	83143	
65508	83142	
65510	85052	
65511	85939	
65512	85938	
65513	85338	
65515	83125	
65516	83209	89414
65519	83127	
65523	85937	
6603	83103	
6604	83101	
6605	83613	89418
6606	83636	
6607	85052 *	
6608	83128	
6609	83635	
6610	85051 *	
66101	83030	
66104	83021	
66106	83016	
66108	83028	
66111	83016	
66112	83017	

Monroe	Gabriel	Upgrade
66116	83018	
66117	83019	
66118	83001	
66122	83038	
66123	83004	
66124	83040	
66125	83035	
6613	83123	89405
66132	83001	
6614	83125	
66143	83007	
66145	83008	
66147	83009	
66149	83022	
6615	83120	
66150	83003	
66154	83014	
66157	83015	
66159	83031	
66162	83025	
66178	83023	
66179	83013	
66181	83025	
66182	83005	
66189	83041	
66193	83025	
66195	83033	
66406	85920	
66407	83134	
66486	85066	
66502	646155	
66504	632147	
6658	85009 *	
66601	83114	
66602	G60164	
66603	83103	
66604	83101	
66605	83613	
66606	83636	

Monroe	Gabriel	Upgrade
66607	85052*	
66608	83128	
66609	83635	
66610	85051*	
66611	83016	
66612	83017	
66613	83123	89405
66614	83125	
66615	83120	
66616	83018	
66617	83019	
66618	85012*	89413
66623	83004	
66624	83141	
66626	85049*	
66627	85045*	
66628	83136	
66629	83107	
66630	83216	
66631	83132	
66632	83001	
66633	83127	
66634	83203	89436
66636	83127	
66637	83304	
66638	83123	89405
66639	G60107	
66643	83007	
66645	83008	
66646	83308	89435
66647	83009	
66648	83112	
66649	83010	
66650	83003	
66653	G60177	
66654	83014	
66656	83110	
66657	83015	
66658	85009*	

Monroe	Gabriel	Upgrade
66659	83002	
66660	85059*	
66661	83123	89405
66663	83121	
66664	83215	
66665	83109	
66668	85055*	89439
66669	83111	
66670	83200	
66677	83114	
66678	83023	
66679	83013	
66681	83025	
66682	83005	
66683	83101	
66691	83118	
66692	83117	
66693	83034	
66695	83033	
66699	83113	
66701	83215	
66707	83215	
66708	83100	
66710	83209	89414
66712	85040*	
66713	83105	
66714	83216	
66715	85026*	89417
66716	85042*	
66717	G60177	
66719	83242	
66801	G60087	
66811	83312	89409
66828	85012*	89413
66829	83103	
66833	83126	89430
66841	83216	
66858	G60028	
66860	83308	89435

Important Note: Competitive Interchanges are to be used for stocking purposes only. **Where multiple crosses are identified, please reference the applications section of this catalog./ Remarque importante**: Les interchanges concurrentiels ne s'utilisent qu'aux fins de stocks. **Dans le cas de références multiples, consulter la section des applications du catalogue**. / **Nota Importante**: Se pueden usar intercambios competitivos para propósitos de almacenamiento solamente. **Cuando se identifican intercambios múltiples, consulte la sección de aplicaciones de este catálogo**.

* Although the competitive product is a 1-3/8" small bore design, Meritor recommends replacement with our 1-5/8" large bore product due to the high durability requirements of this application. / Bien que le produit concurrent ait un petit alésage de 1-3/8 po, Meritor recommande l'utilisation de son produit à grand alésage de 1-5/8 po car cette application exige une grande durabilité. / Aunque el producto competitivo es de un diseño de diámetro interior pequeño de 1-3/8 pulg., Meritor recomienda el reemplazo con un producto de diámetro interior más grande de 1-5/8 pulg. debido a los elevados requerimientos de durabilidad de esta aplicación.

Competitive Interchange List

Piezas de substitución de competidores

Articles concurrents

MONROE ... cont'd

Monroe	Gabriel	Upgrade
66861	83309	89446
66863	83314	
66864	83104	
66868	83219	
66871	83119	
66878	83221	
66883	83314	
66884	83125	
66886	83124	89407
66891	85001*	
66893	85000*	89436
66894	83209	89414
66897	83126	89430
66898	83125	
66902	83401	
66903	83400	
66912	83304	
66913	83303	
66921	83318	
66922	83301	
66923	83456	89447
66924	83317	
66956	83101	
66957	83225	
66966	83353	
66969	83126	89430
6701	83215	
6707	83215	
6708	83100	
6710	83209	89414
6712	85040 *	85901
6713	83105	
6714	83216	
6715	85026 *	89417
6716	85042 *	

Monroe	Gabriel	Upgrade
6717	G60177	
6718	85024 *	89416
6719	83242	
6720	85003 *	89411
6721	83103	
6801	G60087	
6803	G60308	
6811	83312	89409
6817	G60014	
6824	G60010	
6828	83219	
6829	83103	
6831	G60017	
6833	83126	89430
6839	G60015	
6840	83217	
6841	83216	
6858	G60028	
6860	83308	89435
6861	83309	89446
6863	83314	
6864	83104	
6868	G60043	
6878	83221	
6886	83124	89407
6891	83215	
6893	83203	89436
6894	83209	89414
6895	83204	89437
6897	83126	89430
6898	83125	
6900	G60023	
6901	G60024	
6902	83401	
6903	83400	

Monroe	Gabriel	Upgrade
6904	G60003	
6910	G60039	
6911	G60011	
6912	83304	
6913	83303	
6916	83123	89405
6920	G60112	
6921	83318	
6922	83301	
6923	83456	89447
6927	G60035	
6945	G60049	
6956	83101	
6957	83225	
6960	G60044	
6969	83126	89430
6994	83122	89406
70039	85303	89422
70166	85301	
70300	85320	89429
70334	85316	89426
74001	85307	
74003	85314	89425
74004	85315	
74006	85304	
74012	85736	
74024	85308	89422
74025	85303	89422
74028	85302	89420
74029	85308	89422
74069	85301	
74070	85701	
74073	85320	89429
74074	85722	
74075	85712	

Monroe	Gabriel	Upgrade
74076	85325	
74077	85324	
74078	85027	89418
74079	85326	
74080	85332	
74081	85328	
74400	85700	
74402	85711	
74405	85300	89419
74406	85712	
74408	85702	
74409	85310	89423
74410	85701	
74411	85703	
74412	85704	
74413	85314	89425
74414	85723	
74415	85318	
74416	85705	
74417	85311	89424
74418	85709	
74420	85733	
74421	85708	
74422	85733	
74423	85712	
74424	85308	89422
74425	85724	89443
74426	85333	
74427	85308	89422
74436	85334	
74438	85734	
74439	85728	
74440	85729	
74442	85727	

Important Note: Competitive Interchanges are to be used for stocking purposes only. **Where multiple crosses are identified, please reference the applications section of this catalog./ Remarque importante**: Les interchanges concurrentiels ne s'utilisent qu'aux fins de stocks. **Dans le cas de références multiples, consulter la section des applications du catalogue**. / **Nota Importante**: Se pueden usar intercambios competitivos para propósitos de almacenamiento solamente. **Cuando se identifican intercambios múltiples, consulte la sección de aplicaciones de este catálogo**.

* Although the competitive product is a 1-3/8" small bore design, Meritor recommends replacement with our 1-5/8" large bore product due to the high durability requirements of this application. / Bien que le produit concurrent ait un petit alésage de 1-3/8 po, Meritor recommande l'utilisation de son produit à grand alésage de 1-5/8 po car cette application exige une grande durabilité. / Aunque el producto competitivo es de un diseño de diámetro interior pequeño de 1-3/8 pulg., Meritor recomienda el reemplazo con un producto de diámetro interior más grande de 1-5/8 pulg. debido a los elevados requerimientos de durabilidad de esta aplicación.

Competitive Interchange List

Piezas de substitución de competidores

Articles concurrents

MOTORCRAFT

Motorcraft	Gabriel	Upgrade
AA-229	G61113	
AA-450	G61113	
AA-456	G61112	
AA-457	G61114	
AA-494	83131	
AS-1086	G60221	
AS-498G	G60221	
ASH-51	G61113	
AT-504G	G60222	
AT-506G	G60222	
AT-507G	G60161	
AT-546	G61114	
AT-547	G61115	
AT-611	G60084	
AT-620	G61117	
AT-621	G60258	
AT-682	G60221	
AT-683	G60222	
AT-684	G60222	
AT-685	G60222	
AT-696	83132	
AT-764	G60221	
AT-765	G61112	
AX-131A	85007	89412
	83225	
	83217	
AX-135A	G60007	
AX-267A	83309	89446
AX-269A	83312	89409
	83308	
AX-277A	83219	
AX-282A	85010	89409

Motorcraft	Gabriel	Upgrade
AX-310	83215	
AX-327	G61113	
AX-79A	85030	89440
	83221	
AX-97A	83122	89406
	85005	89430
CAH-001	85711	
	85307	
CAH-003	83207	89407
	83215	
	85001	89410
CAH-006	85304	89420
CAH-012	87006	
CAH-025	85303	
	85007	89412
CAH-028	85302	89420
CAH-029	85308	89422
CAH-069	83219	
	85301	
CAHL-400	85303	
	85700	
CAHL-405	85300	89419
CAHL-406	87001	
	85004	
CAHL-409	85310	89423
CAHL-417	85311	89424
	85710	
CAT-722	83400	
CAT-729	G60038	
CAT-730	G60023	
CAT-731	G60035	
CAT-732	G60080	

Motorcraft	Gabriel	Upgrade
CAT-733	G60179	
CAT-736	G60113	
CAT-737	G60120	
CAT-739	G60158	
CAT-740	G60051	
CAT-741	G60098	
CAT-745	G60162	
	G60171	
CAT-750	G60017	
CAT-751	G60161	
CAT-758	G60310	
CAT-759	G60184	
CAT-760	G60182	
CAT-761	G60183	
CAT-762	G60196	
CAT-768	83209	
CAT-776	G60205	
CAT-777	G60206	
CAT-778	G60216	
CAT-793	G60038	
CAT-802	G60329	
	G60101	
	G60075	
CAT-803	G60021	
CAT-817	G60014	
CAT-824	G60010	
CAT-826	G60002	
CAT-828	G60103	
CAT-831	G60017	
CAT-832	G60012	
CAT-839	G60015	
CAT-853	G60028	89413

Motorcraft	Gabriel	Upgrade
CAT-854	G60029	
CAT-868	G60043	
CAT-895	83207	
CAT-899	G60114	
CAT-900	G60023	
CAT-901	G60024	
CAT-904	G60003	
CAT-905	G60031	
CAT-906	G60026	
CAT-907	G60030	
CAT-909	G60046	
CAT-910	G60039	
CAT-911	G60011	
CAT-912	G60185	
CAT-919	G60112	
CAT-920	G60047	
CAT-926	G60033	
CAT-927	G60035	
	G60233	
CAT-928	G60033	
CAT-929	G60111	
CAT-930	G60084	
CAT-932	G60046	
CAT-935	G60052	
CAT-936	G60053	
CAT-944	G60309	
	G60008	
CAT-945	G60078	
	G60049	
CAT-948	G60310	
CAT-953	G60304	
	G60076	
	G60301	

Important Note: Competitive Interchanges are to be used for stocking purposes only. **Where multiple crosses are identified, please reference the applications section of this catalog./ Remarque importante**: Les interchanges concurrentiels ne s'utilisent qu'aux fins de stocks. **Dans le cas de références multiples, consulter la section des applications du catalogue**. / **Nota Importante**: Se pueden usar intercambios competitivos para propósitos de almacenamiento solamente. **Cuando se identifican intercambios múltiples, consulte la sección de aplicaciones de este catálogo**.

Competitive Interchange List

Piezas de substitución de competidores

Articles concurrents

MOTORCRAFT ... cont'd

Motorcraft	Gabriel	Upgrade
CAT-955	G60077	
CAT-958	G60042	
CAT-960	G60044	
CAT-963	G60144	
	G60063	
CAT-964	G60048	
	G60081	
CAT-972	G60107	
CAT-975	G60129	
CAT-976	G60099	
CAT-977	G60313	
CAT-978	G60083	
CAT-983	G60098	
CAT-984	G60163	
	G60302	
CAT-985	G60097	
CAT-986	G60098	
CAT-990	G60307	

Motorcraft	Gabriel	Upgrade
CAX-001	85307	
CAX-707	85001	89410
	83215	89410
CAX-710	83209	89414
CAX-720	85003	89411
CAX-811	83312	89409
CAX-828	85012	89413
	83207	89407
CAX-833	83303	
	85005	89430
CAX-841	83216	
CAX-860	83308	
CAX-861	83309	89446
CAX-863	83314	
CAX-878	83221	
CAX-886	85014	
	83207	89407

Motorcraft	Gabriel	Upgrade
CAX-891	83215	
	85314	89425
CAX-893	83203	89436
	85043	
	85000	89436
CAX-894	85005	89430
	83209	89414
	85013	89414
CAX-898	85006	
	83125	
CAX-912	83304	
CAX-913	83303	
CAX-916	83123	89405
	85036	89405
CAX-921	83318	
CAX-923	83300	89447
	83102	

Motorcraft	Gabriel	Upgrade
CAX-924	83317	
CAX-957	83217	
	83225	
CAX-969	85030	89440
	85011	
	83221	
CLT-109	G60171	
CLT-112	G60144	
CLT-113	G60143	
CLT-114	G60194	
CLT-115	G60115	
CLT-116	G60303	
CLT-124	G60164	
CLT-138	G60120	
CLT-145	G60121	
CLT-146	G60122	
CLT-148	G60106	

SACHS

Sachs	Gabriel	Upgrade
106-884	85708	
112-885	85709	

Sachs	Gabriel	Upgrade
141700000373	85061	89450
141700000443	85066	89448

Sachs	Gabriel	Upgrade
471700000426	85014	

Sachs	Gabriel	Upgrade
471700000449	85918	89449

TRUCKMASTER

Truckmaster	Gabriel	Upgrade
665632	85013	
665633	85033	
665783	83123	
	83123	89405
665784	83122	
	83122	89406
665785	83121	
665918	85900	

Truckmaster	Gabriel	Upgrade
665926	85047	
665927	85901	
665928	85062	
665930	85001	
665931	83312	
665932	85012	
665950	85902	
680237	85303	

Truckmaster	Gabriel	Upgrade
680239	85310	
680240	85302	
680241	85311	
680242	85308	
680253	85314	
680279	83209	
680280	83207	
	83124	

Truckmaster	Gabriel	Upgrade
680281	85003	
680283	83353	
680303	85007	
680425	85320	
680435	85317	
680473	85319	
680601	85012	

Important Note: Competitive Interchanges are to be used for stocking purposes only. **Where multiple crosses are identified, please reference the applications section of this catalog./ Remarque importante**: Les interchanges concurrentiels ne s'utilisent qu'aux fins de stocks. **Dans le cas de références multiples, consulter la section des applications du catalogue**. / **Nota Importante**: Se pueden usar intercambios competitivos para propósitos de almacenamiento solamente. **Cuando se identifican intercambios múltiples, consulte la sección de aplicaciones de este catálogo**.

O.E.M. INTERCHANGE

INTERCAMBIOS CON PIEZAS O.E.M.

ARTICLES DU MARCHÉ DES ÉQUIPEMENTS D'ORIGINE

O.E.M. #	GABRIEL #
ABC Bus	
12B-5-1	85700
3166657	85700
ACF Brill Bus	
610513	85307
631237	85308 or 89422
641521	85308 or 89422
649648	85308 or 89422
659129	85303
661732	83215
661733	83225
995891	85307
Advance Mixer	
680087	85334
Allco Trailer	
727602	83122 or 89406
AM General	
3166657	85700
4975501	85700
5565748	85700
5957136	85700
5969438	85700
5978712	85700
5979484	85302 or 89420
5979574	85700
5982537	85700
Beck Bus	
14QK-140	85304
14QK-2102	85304
Benson Truck Bodies Inc.	
90044089	83124 or 89407
A-20002	85000 or 89436
Bering Truck Corp.	
47902-24	83121
The Binkley Company	
16965	85006
6898	83125
Bluebird School Bus	
0523047	85736
0823054	85304
0961284	85734
1004167	85712
1217934	85304
1316546	85006
1317767	85029
1526417	85052
1658525	89432
1658533	85010
1667831	85029

O.E.M. #	GABRIEL #
Bluebird School Bus (Cont'd)	
1668722	85030 or 89440
1668730	85013 or 89414
1722214	85030 or 89440
1722222	85013 or 89414
1746163	85006
1750793	85712
1962422	85304
1962430	83207 or 89407
2021459	85012 or 89413
300-0823047	85736
300-0823054	85304
300-09612284	85734
300-1316546	85006
303-1350628	85712
4759272	89447
609180	85304
614958	85307
614966	85307
614974	85304
680155	85712
70317	89432
70397	85006
7805M1001	85919
90044448	85051
90045050	85914
90-1813	85712
90-1968	85712
A-4890	85712
Breda Bus	
500-403-4	.....
Brockway School Bus	
14QK-281P10	85305
14QK-282P3	83216
152398	85304
152412	83215
508657	85307
515231	85303
530873	83207 or 89407
532397	85307
Built Rite	
318-06-100	85006
Bus & Truck Co.	
0100-905	85307
680091	85303
70039	85303
70041	85305
Cascade Trailer	
120-1	83125

O.E.M. #	GABRIEL #
Challenge	
1540459	630811
632147	632147
632155	632155
Chalmers Suspension	
665174	85060
800670	85301
Chance Bus	
270-6708	85014
59039	83207 or 89407
665017	85014
6892	83207 or 89407
6893	83203 or 89436
728600	83203 or 89436
AS789B	85014
Chevrolet Truck	
1202-0012	83023
1202-0032	83016
1202-0054	83021
12474915	83122 or 89406
12474917	83121
15123676	83136
1-51630-168-1	G60107
1-51630-217-0	83114
1-51630-217-1	83114
1-51630-219-1	83114
15174902	85071
15588554	83136
15642943	83136
15740554	83121
15963161	83122 or 89406
21998392	85336
22002293	85005 or 89430
22002294	83304
22002295	83303
22007700	83207 or 89407
22007701	85005 or 89430
22007702	83304
22007703	83303
22007750	83207 or 89407
22007751	83303
22007752	83304
22007753	83303
22012065	85304
22012067	85700
22012079	85701
22012082	85702

O.E.M. #	GABRIEL #
Chevrolet Truck (Cont'd)	
22012083	85711
22012090	85308 or 89422
22012091	85303
22012095	85005 or 89430
22012096	83221
22012114	85700
22012131	85711
22012166	85005 or 89430
22012169	83221
22017530	83303
22017531	83303
22024062	85701
22024673	85710
22045526	85702
22046481	85702
22046483	85304
22046485	85710
22046499	85710
2204683	85304
22052014	85702
22052336	85304
22052424	85710
22064230	83136
22064231	85324
22064232	85071
22064233	83136
22064432	85050
22064489	85336
22064804	83136
22064805	83136
22064806	83136
22064807	83136
22099889	85336
22165187	83136
22165188	83136
22165189	83136
22166442	83136
3171068	83216
3171069	85304
3171462	85005 or 89430
3171696	85307
3172948	85303
3175509	85735
3178157	85700
3178233	85734
3178507	85700
3178995	85700
3188626	85300 or 89419
3188729	85303
3192657	83216
3192890	85005 or 89430

O.E.M. INTERCHANGE

INTERCAMBIOS CON PIEZAS O.E.M.

ARTICLES DU MARCHÉ DES ÉQUIPEMENTS D'ORIGINE

O.E.M. #	GABRIEL #
Chevrolet Truck (Cont'd)	
3192892	83221
4939852	85308 or 89422
4939967	85308 or 89422
4940600	83209 or 89414
4940601	83216
4940606	85005 or 89430
4940614	83216
4940627	83203 or 89436
4940640	83216
4940650	83207 or 89407
4940654	83216
4940660	83207 or 89407
4940662	85005 or 89430
4963844	85307
4963853	83216
4963854	83216
4964853	83217
4974401	85700
4975429	85300 or 89419
4975467	83207 or 89407
4975479	83400
4975480	83400
4975494	83207 or 89407
4975497	85005 or 89430
4975510	83221
4975511	83303
4975515	85701
4975516	85702
4975518	85704
4975538	85700
4975549	83216
4975550	85702
4984526	83216
5171068	83216
5316784	85700
5316791	83219
5316792	85305
5316793	85305
5321920	85307
5321929	85307
5348631	83203 or 89436
5352858	85305
5353054	85303
5355798	85307

O.E.M. #	GABRIEL #
Chevrolet Truck (Cont'd)	
5357955	85300 or 89419
5357956	85734
5357959	85300 or 89419
5361994	85734
5374779	85308 or 89422
5374999	85307
5385939	85307
5392387	85303
5394448	85305
5394467	85305
5394468	85735
5455798	85307
5513489	83216
5513716	85304
5516459	85305
5522781	85735
5522794	85308 or 89422
5522818	85305
5527001	85300 or 89419
5527271	85700
5527272	85700
5527606	85305
5531027	85301
5531435	85307
5531436	85307
5531437	85307
5532026	85304
5532425	83207 or 89407
5532433	83207 or 89407
5532675	85307
5534430	85303
5534439	85304
5534447	85303
5544060	85302 or 89420
5544112	83216
5544581	85302 or 89420
5544716	85304
5544717	85304
5544812	83308
5544818	85735
5549899	83207 or 89407
5549924	85700
5549925	85304
5552111	85304
5552112	85307
5552114	83216
5552205	83217

O.E.M. #	GABRIEL #
Chevrolet Truck (Cont'd)	
5552206	83214
5552207	83217
5552208	83217
5552209	83215
5552210	85308 or 89422
5552244	85308 or 89422
5552285	83214
5552286	83217
5552287	83217
5552288	83217
5552451	85308 or 89422
5552452	85303
5552453	85301
5552456	85307
5552527	85735
5552552	85303
5554184	85302 or 89420
5554589	85307
5554596	85303
5554814	85302 or 89420
5554959	83401
5554995	85305
5559363	83203 or 89436
5585939	85307
684280	83209 or 89414
88963409	85336
88982682	83136
88982684	83136
88982686	85071
88982688	85336
8-94454-986-0	G60177
8-94454-987-0	G60177
94033786	83114
94051090	83114
94057593	83114
94454987	G60177
9-51630-647-1	G60177
9-51630-666-0	85012 or 89413
9-51630-666-2	85012 or 89413
97083027	G60177
97083029	G60177
97201960	G60177
97-2210-00153	85701
97-2210-00164	85708
97-2210-00170	85733

O.E.M. #	GABRIEL #
Clark Equipment	
355778	85315
5532675	85307
680042	85301
Continental Trailways-Eagle Int'l	
01-0100-020	85307
01-0100-905	85303
5394467	85305
5532026	85304
6-05-5	85307
680091	85303
70039	85303
70041	85305
Crane Carrier	
277A-1	85307
277A-12	85304
277A-13	85302 or 89420
277A-14	85304
277A-8	85303
277A-9	85307
680088	85713
680091	85303
Crown Coach	
3188729	85303
5532026	85304
5532036	85734
Cunha Products Ohd	
CP-5222	85315
Diamond T	
5549925	85304
Diamond-reo	
220-55-1	83214
220-55-2	85304
220-55-6	83214
220-55-7	85304
220-55-8	83217
Dina Bus	
39380353-6	85716
39390339-6	85302 or 89420
39390340-4	85716
Dodge Truck	
2516009	G60028
2960707	G60028
2961043	G60028
3633643	G60028
3633744	G60028
3638112	G60028
3638631	G60119
4036892	G60119
Duplex Truck	
59024	83204
7604-3371	83204

O.E.M. INTERCHANGE

INTERCAMBIOS CON PIEZAS O.E.M.

ARTICLES DU MARCHÉ DES ÉQUIPEMENTS D'ORIGINE

O.E.M. #	GABRIEL #
Dura Suspension	
1080099	83203 or 89436
12866	83207 or 89407
59024	83204
59030	83203 or 89436
665133	83203 or 89436
665267	85029
7604-3371	83204
A-2212	85029
Eagle Motor Coach	
01-0100-905	85303
014-0100-905	85308 or 89422
0140100-905	85308 or 89422
101364	85305
12B-5-1	85700
12J-5-10	85733
154-0100-514	85314 or 89425
5394467	85305
680091	85303
690060	85713
70041	85305
East Trailer	
A-20002	85000 or 89436
A-20126	85323 or 89436
Fluidrive	
2697	85712
Flxible Bus	
015813	85708
06-0367-00151	85700
06-0367-00156	85702
06-0367-00157	85701
22012067	85700
22012114	85700
22024061	85704
22024062	85701
22024506	85703
22025066	85703
22025067	85704
22025305	85704
3166657	85700
3192333	85700
48-1-239	85736
48-1-241	85712
4975518	85704
6-05-1	85736
6-05-10	85734
6-05-13	85304
6-05-2	85736

O.E.M. #	GABRIEL #
Flxible Bus (Cont'd)	
6-05-3	85736
6-05-4	85736
6-05-5	85307
6-05-6	85736
6-05-7	85736
6-05-8	85736
6-05-9	85304
6-367-1	85711
6-367-11	85711
6-367-12	85700
6-367-14	85700
6-367-16	85700
6-367-17	85700
6-367-2	85736
6-367-3	85304
6-367-4	83217
6-367-6	85711
6-367-7	85305
6-367-8	85700
6-367-9	85711
680155	85712
695125	85704
74412	85704
87-2519-00001	85703
87-2519-00002	85731
87-2519-00003	85703
87-2519-00004	85731
87-2520-00001	85704
87-2520-00002	85730
87-2520-00003	85704
87-2520-00004	85730
97-2201-00001	85703
97-2201-00002	85703
97-2201-00003	85703
97-2201-00004	85703
97-2201-00005	85703
97-2201-00006	85703
97-2201-00007	85703
97-2201-00008	85731
97-2201-00009	85703
97-2201-00151	85700
97-2210-00001	85704
97-2210-00003	85704
97-2210-00004	85704
97-2210-00005	85704
97-2210-00006	85704
97-2210-00009	85704
97-2210-00010	85730
97-2210-00011	85704
97-2210-00153	85701
97-2210-00156	85702
97-2210-00157	85708
97-2210-00160	85705
97-2210-00162	85701
97-2210-00164	85708
97-2210-00170	85733

O.E.M. #	GABRIEL #
Flxible Bus (Cont'd)	
97-9999-00732	85707
97-9999-02514	85700
97-9999-02515	85702
97-9999-02516	85701
97-9999-02519	85707
97-9999-02592	85710
97-9999-02595	85313
97-9999-02632	85711
97-9999-02633	85311 or 89424
97-9999-02634	85733
97-9999-02635	85718
97-9999-02636	85716
97-9999-807	85307
Flyer Industries	
009863	85722
01595	85711
15813	85708
22012067	85700
22012114	85700
3166657	85700
3192333	85700
4975501	85700
4975552	85711
592-6568	85700
5979574	85700
Ford	
1202-0012	83023
1202-0032	83016
1202-0042	83025
1202-0043	83032
1202-1043	83025
1202-1044	83025
47902-13	83122 or 89406
47902-28	85013 or 89414
47902-8	83122 or 89406
57241-2	83109
57365-111	85006 or 89401
680029	85301
70127	85006 or 89401
70128	85006 or 89401
87HU-18045-AA	85301
90044769	83207 or 89407
90044770	83207 or 89407
90045068	89441
90045099	85906
90045132	85909
AA-494	83131

O.E.M. #	GABRIEL #
Ford (Cont'd)	
AT-611	G60084
AT-696	83132
AX267A	83309 or 89446
AX-310	83215
B3Q-18124-A	83219
B3Q-18125-A	83217
B3T-18125-A	83217
B3TZ-18125-A	83217
B6TZ-18124-A	83219
B7C-18125-A	83217
B7J-18124-A	83219
B7J-18125-A	83217
B7J-18125-C	83217
B7T-18124-A	83219
B7T-18124-B	83216
B7T-18124-C	83217
B7TZ-18124-B	83216
B7TZ-18124-C	83216
B7TZ-18124-D	83219
B7TZ-18124-E	83217
B7TZ-18125-C	83217
B8Q-18125-A	85307
B8QZ-18124-A	83312 or 89409
B8T-18124-A	83219
B9TT-18045-C	83219
B9TT-18045-D	83219
C0TT-18045-A	83219
C0TT-18045-D	83216
C0TZ-18124-A	83216
C1TT-18045-C	83312 or 89409
C1TT-18045-D	G60007
C1TT-18045-E	83314
C1TZ-18045-C	83312 or 89409
C1TZ-18124-A	83217
C1TZ-18124-B	83216
C1TZ-18124-C	83312 or 89409
C1TZ-18124-D	83309 or 89446
C1TZ-18124-N	83314
C1TZ-18125-B	83217
C1VT-18080-B	83217
C2TA-18045-A	83216
C2TA-18045-B	83308
C2TZ-18124-A	83308
C3TA-18045-A	83216
C3TZ-18124-A	83308
C4HZ-18124-A	83312 or 89409
C4HZ-18124-B	83309 or 89446
C4HZ-18124-C	83314

O.E.M. INTERCHANGE

INTERCAMBIOS CON PIEZAS O.E.M.

ARTICLES DU MARCHÉ DES ÉQUIPEMENTS D'ORIGINE

O.E.M. #	GABRIEL #
Ford (Cont'd)	
C4HZ-18124-D	83312 or 89409
C4HZ-18124-E	83309 or 89446
C4HZ-18124-F	83308
C4PF-18045-H	83216
C4TZ-18124-AA	83308
C4TZ-18124-AB	83308
C4TZ-18124-B	83308
C5TZ-18124-A	83308
C6PF-18077-A	G60021
C6PF-18077-DD	83216
C6PF-18077-DE	83219
C6PF-18077-DL	83312 or 89409
C6PF-18077-DN	83314
C6PF-18077-F	83225
C6TA-18045-U	85301
C6TA-18045-V	85301
C6TA-18045-Y	85301
C6TA-18045-Z	85301
C6TS-18080-A	83217
C6TZ-18124-D	85301
C6TZ-18124-E	85301
C6TZ-18124-H	85301
C6TZ-18124-J	85301
C7HZ-18124-A	83312 or 89409
C7PF-18077-A	83225
C7PF-18077-Z	83217
C7TA-18045-R	83216
C7TA-18045-Z	85301
C8HA-18045-A	83312 or 89409
C8PF-18045-CM	83216
C8TA-18045-AA	G60023
CITT-18045-G	83216
D0HA-18045-D	83309 or 89446
D0HA-18045-E	83312 or 89409
D0HZ-18124-A	83309 or 89446
D0HZ-18124-B	83312 or 89409
D0HZ-18124-C	83314
D1TF-18045-LA	83312 or 89409
D1TZ-18124-D	83308
D1TZ-18124-E	83216
D1TZ-18125-E	83217
D2EF-18045-AA	83312 or 89409
D2EF-18124-AA	83312 or 89409
D2HA-18045-E1A	85304
D2HA-18045-E1B	85304

O.E.M. #	GABRIEL #
Ford (Cont'd)	
D2HA-18045-E2A	85304
D2HA-18045-E2B	85304
D2HA-18045-EB	85301
D2HA-18045-F1A	85301
D2HA-18045-F1B	85301
D2HA-18045-F2A	85301
D2HA-18045-F2B	85301
D2HF-18045-A	83314
D2HF-18045-AA	83314
D2HF-18045-BA	83309 or 89446
D2HF-18045-CA	83308
D2HF-18045-DA	83312 or 89409
D2HF-18124-AA	83314
D2HT-18045-CA	83314
D2HT-18045-EA	83312 or 89409
D2HT-18045-GA	83308
D2HT-18080-HA	83225
D2HZ-18080-A	83209 or 89414
D2HZ-18125-A	83209 or 89414
D2HZ-18125-B	83209 or 89414
D2KF-18045-AA	83312 or 89409
D2KF-18124-AA	83312 or 89409
D2TA-18045-AAA	83219
D2TA-18045-ZA	83219
D2TF-18045-AA	83312 or 89409
D2TF-18045-GA	83308
D2TF-18080-HA	83225
D2TF-18124-F	83309 or 89446
D2TZ-18124-A	83308
D2TZ-18124-E	83312 or 89409
D2TZ-18124-F	83309 or 89446
D2TZ-18124-G	83314
D2TZ-18124-H	83308
D2TZ-18124-J	83312 or 89409
D3TA-18045-BA	83219
D3TZ-18124-B	83219
D3TZ-18125-C	83217
D3TZ-18125-D	83217
D4HA-18080-A	83209 or 89414
D4HA-18080-AA	83209 or 89414
D4TZ-18124-J	83308
D5TZ-18124-B	83308

O.E.M. #	GABRIEL #
Ford (Cont'd)	
D5TZ-18124-C	83312 or 89409
D7HA-18080-AA	83123 or 89405
D7HF-18045-FA	83312 or 89409
D7HF-18080-AA	83215
D7HF-18125-AA	83215
D7HT-18045-BA	83312 or 89409
D7HT-18045-CA	83314
D7HT-18045-DA	83309 or 89446
D7HT-18045-EA	83312 or 89409
D7HT-18045-GA	83308
D7HT-18045-HA	85012 or 89413
D7HT-18045-JA	83308
D7HT-18045-NA	85301
D7HT-18080-AA	83215
D7HT-18080-BA	83225
D7HT-18080-CA	83225
D7HT-18080-DA	83215
D7HT-18124-BA	83312 or 89409
D7HT-18124-CA	83314
D7HT-18124-DA	83309 or 89446
D7HT-18124-EA	83312 or 89409
D7HT-18124-FA	83312 or 89409
D7HT-18124-GA	83308
D7HT-18124-HA	83219
D7HT-18124-JA	83308
D7HT-18124-KA	85301
D7HT-18125-BA	83217
D7HT-18125-CA	83217
D7HT-18125-DA	83215
D7HT-18125-FA	83123 or 89405
D7HZ-18125-A	83215
D7KF-18045-EA	83312 or 89409
D7TA-18124-GA	83314
D8HT-18A160-AB	.....
D8HZ-18124-A	85301
D8HZ-18125-A	83209 or 89414
D8HZ-18125-B	83123 or 89405
E0HT-18045-AA	83309 or 89446
E0HT-18045-AB	83309 or 89446
E0HT-18080-AA	83215

O.E.M. #	GABRIEL #
Ford (Cont'd)	
E0HZ-18124-A	83309 or 89446
E1TA-18045-AA	83309 or 89446
E1TD-18045-AA	83309 or 89446
E5HT-18045-AA	85301
E5HT-18045-DA	85301
E5HT-18045-EA	85301
E5HT-18080-DA	85315
E5HT-18080-EA	85315
E6HT-18080-AA	83215
E6HZ-18124-A	85301
E6HZ-18124-D	85301
E6HZ-18125-D	83215
E7HZ-18124-A	85301
E7XZ-18124-A	G60023
E7XZ-18124-F	G60046
E7XZ-18124-G	G60046
E7XZ-18125-B	G60024
E9HS-18045-AA	83309 or 89446
E9HS-18080-AA	85716
E9HZ-18124-A	83309 or 89446
E9HZ-18125-A	85716
F0HS-18045-AA	85006 or 89401
F0HT-18045-CA	85006 or 89401
F0HT-18080-AA	85005 or 89430
F0HZ-18124-B	85006 or 89401
F0HZ-18125-A	85005 or 89430
F1HT-18045-AA	83309 or 89446
F1HT-18045-CA	83308
F1HT-18045-CB	83216
F1HT-18045-DA	83312 or 89409
F1HT-18045-DB	83308
F1HT-18045-EA	89402
F1HT-18045-EB	89402
F1HT-18045-GA	85006 or 89401
F1HT-18045-GB	89403
F1HT-18045-HB	85006 or 89401
F1HT-18045-LB	85006 or 89401
F1HT-18045-NA	85040
F1HT-18045-RA	89402
F1HT-18045-RB	89402
F1HZ-18124-A	83309 or 89446

O.E.M. INTERCHANGE

INTERCAMBIOS CON PIEZAS O.E.M.

ARTICLES DU MARCHÉ DES ÉQUIPEMENTS D'ORIGINE

O.E.M. #	GABRIEL #
Ford (Cont'd)	
F1HZ-18124-B	83308 or 89435
F1HZ-18124-C	89402
F1HZ-18124-D	85006 or 89401
F1HZ-18124-E	85006 or 89401
F1HZ-18124-F	85006 or 89401
F1HZ-18124-G	85006 or 89401
F1HZ-18124-H	85040
F1HZ-18124-J	83308
F1HZ-18124-K	89402
F2HT-18045-BA	85376
F2HT-18045-CA	85376
F2HZ-18124-A	85376
F2HZ-18124-B	85301
F4HT-18045-AB	83314
F4HT-18045-AC	83314
F4HT-18045-CB	83107
F4HT-18045-DA	85063
F4HT-18045-EA	83125
F4HT-18080-AA	85314 or 89425
F4HT-18080-AB	85314 or 89425
F4HT-18080-BA	85001 or 89410
F4TA-18045-TA	G60080
F4TA-18080-PA	G60084
F4TZ-18124-K	G60080
F4TZ-18125-E	G60084
F5HZ-18124-A	83314
F5HZ-18124-B	83107
F5HZ-18124-C	85063
F5HZ-18124-D	83125
F5HZ-18125-A	85314 or 89425
F5HZ-18125-B	85001 or 89410
F5HZ-18125-DA	85314 or 89425
F6HT-18045-AA	85054 or 89438
F6HT-18045-AC	85054 or 89438
F6HT-18045-BC	85047 or 89435
F6HT-18045-CC	85055 or 89439
F6HT-18045-EB	85055 or 89439
F6HT-18045-EC	85055 or 89439
F6HT-18045-GB	85030 or 89440

O.E.M. #	GABRIEL #
Ford (Cont'd)	
F6HT-18045-GC	85030 or 89440
F6HT-18045-HB	85054 or 89438
F6HT-18045-HC	85054 or 89438
F6HT-18045-JB	83200
F6HT-18045-JC	83200
F6HT-18045-KA	83200
F6HT-18045-LA	85376
F6HT-18045-MA	85006 or 89401
F6HT-18080-CA	85314 or 89425
F6HT-18080-DA	83109
F6HT-18080-EA	85906
F6HT-18080-FC	85013 or 89414
F6HT-18080-JA	85305
F6HZ-18080-FC	85013 or 89414
F6HZ-18124-A	85054 or 89438
F6HZ-18124-B	83308 or 89435
F6HZ-18124-C	85055 or 89439
F6HZ-18124-D	85055 or 89439
F6HZ-18124-E	85055 or 89439
F6HZ-18124-F	85055 or 89439
F6HZ-18124-G	85054 or 89438
F6HZ-18124-H	85054 or 89438
F6HZ-18124-J	83200
F6HZ-18124-KA	83200
F6HZ-18124-MA	85006 or 89401
F6HZ-18125-A	85314 or 89425
F6HZ-18125-B	83109
F6HZ-18125-C	89441
F6HZ-18125-D	85013 or 89414
F6HZ-5K407-AB	83034
F6HZ-5K407-BA	83033
F81A-18080-DCA	G60084
F81A-18080-ZC	83132
F81Z-18125-DC	G60084
F81Z-18125-ZA	83132
F8HT-5K407-AA	83033
TACAA-18045-A	83216
TANNA-18045-A	83312 or 89409
TBDA-18080-A	83217

O.E.M. #	GABRIEL #
Ford (Cont'd)	
TBDA-18080-B	83217
TDAA-18080-B	83217
TDBA-18045-A	83219
TDBA-18045-B	83219
TDBA-18080-A	83217
TDBA-18080-B	83217
TDBA-18080-C	83217
TDBE-18045-A	83219
TFAA-18045-B	83219
TFAA-18045-C	83219
TFAA-18080-A	85307
THAB-18045-A	83219
THAB-18045-B	83219
TQSH-18045-A	83309 or 89446
XC35-18045-AB	83131
XC35-18045-JA	83131
XC3Z-18124-JA	83131
Freightliner	
10-12030-002	85320 or 89429
10-12032-000	85320 or 89429
10-12032-001	85320 or 89429
10-12032-002	85320 or 89429
10-12032-003	85320 or 89429
10-12032-004	85320 or 89429
10-12388-000	85920
10-12390-000	85920
10-12470-000	.....
10-12542-000	85901
10-12703-000	85918 or 89449
10-12704-000	85918 or 89449
10-13021-000	85918 or 89449
10-13063-000	85918 or 89449
10-13211-000	85918 or 89449
10-13634-000	85918 or 89449
1202-0012	83023
1202-0032	83016
1202-0042	83025
1202-0043	83032
1202-0044	83025
1202-0054	83021
1202-1043	83025
1202-1044	83025
16-10688-000	85042

O.E.M. #	GABRIEL #
Freightliner (Cont'd)	
16-11133-000	85007 or 89412
16-12117-000	85007 or 89412
16-13947-000	85319 or 89428
16-13957-000	85724 or 89443
16-13957-003	85724 or 89443
16-14259-000	85331
16-14577-000	85043
16-14669-000	G60111
16-14759-000	85000 or 89436
16-15765-000	85921
16-15817-000	85724 or 89443
16-16442-000	83134
16-16486-000	83134
16-16577-000	85335
18-29846-000	83009
18-30378	83006
18-30378-000	83001
18-31476-000	83020
18-32999-000	83001
18-32999-001	83006
18-41762-000	83038
18-41762-001	
18-41762-002	83038
18-44321-000	83009
18-45067-000	83034
18-47349-000	83039
18-47350-000	83040
535228	85302 or 89420
58913-003	85932 or 89453
650224	83225
654654	85043
660235	85042
665236	85007 or 89412
665538	85006
680008	85300 or 89419
680009	85302 or 89420
680017	85302 or 89420
6803230200	85043
6803230300	85006
6803260000	83120
680339	85724 or 89443
6813230900	85009
6813231300	.....

O.E.M. INTERCHANGE

INTERCAMBIOS CON PIEZAS O.E.M.

ARTICLES DU MARCHÉ DES ÉQUIPEMENTS D'ORIGINE

O.E.M. #	GABRIEL #
Freightliner (Cont'd)	
6813260000	83634
6813260200	85011
6813260400	85319 or 89428
681-891-02-05	83017
70029	85308 or 89422
70042	85302 or 89420
90044162	83128
Freightliner Custom Chassis	
10-13358-000	85904
1398980	83127
16-14782-000	.....
16-15089-000	.....
16-15394-000	.....
16-15436-000	.....
16-15473-000	.....
16-15676-000	85058
16-15705-000	.....
16-16082-000	85043
16-16331-000	.....
16-17019-000	.....
16-17684-000	85058
1745500	85058
651375	83119
66554540l	89430
6803230300	85006
6803260000	83120
GBL654725	83120
GBL654875	83117
GBL654918	83118
GBL665538	85006
MAE16950	83118
P110799	.....
P116168	83117
P117099	.....
P117146	83118
P117253	83116
RW24285	83119
Fruehauf	
144-5910	85300 or 89419
5116-117	83122 or 89406
5352858	85305
680117	85300 or 89419
680298	85321
UCA-01113	85304
UCA-5431	85305
UCD-006216-001	83203 or 89436
UCD-6216-1	83203 or 89436

O.E.M. #	GABRIEL #
Fruehauf (Cont'd)	
UCE-1295-1	85300 or 89419
UCE-1295-901	85300 or 89419
UCE-2983-000	85322
UCE-2983-001	85322
UCE-2983-1	85322
UCE-9399-1	83122 or 89406
UCF-8339-001	85321
UCF-8339-002	85321
UEY 1124-001	85030 or 89440
Fwd Truck	
450739	85302 or 89420
Gillig Bros.	
200-171	85304
53-02132	85723
53-02133-000	85318
53-14010	85318
53-176	85304
53-24685	85723
57113	83219
57131	83216
680009	85302 or 89420
695109	85723
695110	85318
70034	85302 or 89420
82-01878	83122 or 89406
82-21542-000	85716
90F-1912	85318
H53-02132/14005	85723
MR-6394	85723
GMC	
1202-0012	83023
1202-0032	83016
1202-0054	83021
GMC Truck	
12474915	83122 or 89406
12474917	83121
15123676	83136
1-51630-168-1	G60107
1-51630-217-0	83114
1-51630-217-1	83114
1-51630-219-1	83114
15174902	85071
15588554	83136
15642943	83136
15740554	83121
15963161	83122 or 89406

O.E.M. #	GABRIEL #
GMC Truck (Cont'd)	
21998392	85336
22002293	85005 or 89430
22002294	83304
22002295	83303
22007701	85005 or 89430
22007703	83303
22007750	83207 or 89407
22007751	83303
22007752	83304
22007753	83303
22007757	83304
22012065	85304
22012067	85700
22012079	85701
22012082	85702
22012083	85711
22012090	85308 or 89422
22012091	85303
22012095	85005 or 89430
22012096	83221
22012114	85700
22012131	85711
22012166	85005 or 89430
22012169	83221
22012196	83221
22017530	83303
22017531	83303
22024062	85701
22024673	85710
22045526	85702
22046481	85702
22046483	85304
22046485	85710
22046499	85710
22052014	85702
22052336	85304
22052424	85710
22064230	83136
22064231	85324
22064232	85071
22064233	83136
22064432	85050
22064489	85336
22064804	83136
22064805	83136
22064806	83136
22064807	83136
22099889	85336
2212169	83221
22165187	83136
22165188	83136

O.E.M. #	GABRIEL #
GMC Truck (Cont'd)	
22165189	83136
22166442	83136
3166657	85700
3171068	83216
3171069	85304
3171462	85005 or 89430
3171696	85307
3172948	85303
3175509	85735
3178106	85700
3178157	85700
3178233	85734
3178507	85700
3178995	85700
3182842	85711
3188599	85711
3188626	85300 or 89419
3188729	85303
3189265	85700
3192333	85700
3192416	85711
3192657	83216
3192890	85005 or 89430
3192891	83221
3192892	83221
4939852	85308 or 89422
4939967	85308 or 89422
4940600	83209 or 89414
4940601	83216
4940606	85005 or 89430
4940614	83216
4940627	83203 or 89436
4940640	83216
4940650	83207 or 89407
4940654	83216
4940660	83207 or 89407
4940662	85005 or 89430
4963844	85307
4963853	83216
4963854	83216
4964853	83217
4974401	85700
4975429	85300 or 89419
4975467	83207 or 89407

O.E.M. INTERCHANGE

INTERCAMBIOS CON PIEZAS O.E.M.

ARTICLES DU MARCHÉ DES ÉQUIPEMENTS D'ORIGINE

O.E.M. #	GABRIEL #
GMC Truck (Cont'd)	
4975479	83400
4975480	83400
4975494	83207 or 89407
4975497	85005 or 89430
4975510	83221
4975511	83303
4975515	85701
4975516	85702
4975518	85704
4975538	85700
4975549	83216
4975550	85702
4975552	85711
4984526	83216
5171068	83216
5304059	85700
5316784	85700
5316791	83219
5316792	85305
5316793	85305
5316794	85700
5316984	85313
5321920	85307
5321929	85307
5348631	83203 or 89436
5352857	85700
5352858	85305
5353054	85303
5355798	85307
5357955	85300 or 89419
5357956	85734
5357959	85300 or 89419
5361994	85734
5374779	85308 or 89422
5374999	85307
5385939	85307
5392387	85303
5394448	85305
5394467	85305
5394468	85735
5455798	85307
5513489	83216
5513716	85304
5516459	85305
5522781	85735
5522794	85308 or 89422
5522818	85305
5527001	85300 or 89419
5527271	85700

O.E.M. #	GABRIEL #
GMC Truck (Cont'd)	
5527272	85700
5527606	85305
5531027	85301
5531435	85307
5531436	85307
5531437	85307
5532026	85304
5532425	83207 or 89407
5532433	83207 or 89407
5532675	85307
5534430	85303
5534439	85304
5534447	85303
5544060	85302 or 89420
5544112	83216
5544581	85302 or 89420
5544716	85304
5544717	85304
5544812	83308
5544818	85735
5549899	83207 or 89407
5549924	85700
5549925	85304
5552111	85304
5552112	85307
5552114	83216
5552205	83217
5552206	83214
5552207	83217
5552208	83217
5552209	83215
5552210	85308 or 89422
5552244	85308 or 89422
5552285	83214
5552286	83217
5552287	83217
5552288	83217
5552451	85308 or 89422
5552452	85303
5552453	85301
5552454	85302 or 89420
5552456	85307
5552527	85735
5554184	85302 or 89420
5554589	85307
5554596	85303

O.E.M. #	GABRIEL #
GMC Truck (Cont'd)	
5554814	85302 or 89420
5554959	83401
5554995	85305
5559363	83203 or 89436
5585939	85307
684280	83209 or 89414
8-51630-666-0	85012 or 89413
88963409	85336
88982682	83136
88982684	83136
88982686	85071
88982688	85336
8-94454-986-0	G60177
8-94454-987-0	G60177
8-97083-029-0	G60177
90044769	83207 or 89407
90044770	83207 or 89407
94033786	83114
94051090	83114
94057593	83114
94454987	G60177
9-51630-647-1	G60177
97083027	G60177
97083029	G60177
97-2210-00153	85701
97-2210-00164	85708
97-2210-00170	85733
Granning Suspension	
1085	83214
2697	85712
680162	85300 or 89419
701071-01	646155
Great Dane Trailer	
18163-01	83207 or 89407
18164-01	83122 or 89406
18165-01	85006
Greyhound Bus	
12 TA-01-013	85303
12B-5-1	85700
3166657	85700
3178154	85735
3178157	85700
3192333	85700
5316984	85313
690029	85700

O.E.M. #	GABRIEL #
Grumman Bus	
22024506	85703
22025066	85703
22025067	85704
22025305	85704
97-2201-00001	85703
97-2201-00002	85703
97-2201-00003	85703
97-2201-00004	85703
97-2201-00005	85703
97-2210-00001	85704
97-2210-00002	85704
97-2210-00003	85704
97-2210-00004	85704
97-2210-00005	85704
Hardee Mfg	
8030223	83207 or 89407
AS789B	85014
Hausman	
695110	85318
695119	85702
695198	85706
Hendrickson Suspension	
A-14496	632155
Hendrickson Trailer Suspension Systems	
A-10348	85043
A-14583	85000 or 89436
A-1667	85000 or 89436
A-1668	85000 or 89436
A-20001	85000 or 89436
A-20002	85000 or 89436
A-20126	85323 or 89436
A-20345	.....
A-20819	.....
A-20886	89440
A-20887	85005 or 89430
A-20889	85323 or 89436
A-21292	85052
A-2160	85014
A-2212	85029
A-2213	85010
A-2218	85030 or 89440
A-2230	85005 or 89430
A-2232	85005 or 89430

O.E.M. INTERCHANGE

INTERCAMBIOS CON PIEZAS O.E.M.

ARTICLES DU MARCHÉ DES ÉQUIPEMENTS D'ORIGINE

O.E.M. #	GABRIEL #
Hendrickson Trailer Suspension Systems (Cont'd)	
A-2240	85013 or 89414
A-2240-1	85043
A-2471	85006
A-4084	85005 or 89430
A-4089	83209 or 89414
A-4890	85712
B-21832	85323 or 89436
B-21936	85938
B-21947	85052
B-22311	85045
B-22312	85939
B-22345	85911
B-22862	85045
B-23361	85911
B-23362	89437
B-23566	85000 or 89436
B-23649	85938
B-23650	85052
B-23651	85045
B-23743	85938
B-24023	85738
B-24088	85000 or 89436
B-24125	85323 or 89436
B-24579	85939
B-25436	89430
B-25437	85337
B-25515	85338
S-1667	85000 or 89436
S-2160	85014
Hendrickson Truck Suspension Systems	
12738	83225
47902-11	83207 or 89407
47902-13	83122 or 89406
47902-15	83121
47902-18	85030 or 89440
47902-19	83123 or 89405
47902-24	83121
47902-25	83125
47902-28	85013 or 89414
47902-3	85005 or 89430
47902-8	83122 or 89406

O.E.M. #	GABRIEL #
Hendrickson Truck Suspension Systems (Cont'd)	
47902-9	83123 or 89405
503610C2	83207 or 89407
5554596	85303
57241-1	83111
57241-3	83112
57241-4	83110
57241-6	83111
57324-11	85305
57324-5	85903
57324-6	85904
58913-003	85932 or 89453
60657-3	85072
60657-7	85072
60665-1	.....
60665-2	.....
60665-3	83137
60665-4	85036 or 89405
60665-5	.....
60665-9	85904
60670-1	83123 or 89405
60670-10	.....
60670-11	.....
60670-2	83207 or 89407
60670-3	83122 or 89406
60670-4	83123 or 89405
60670-5	83121
60670-6	83215
60670-7	83144
60670-8	83123 or 89405
60670-9	85013 or 89414
60675-1	.....
60675-2	.....
60675-3	.....
60675-4	.....
60675-5	.....
60680-1	83111
60680-2	83109
60680-3	83112
60680-4	83143
60680-5	83142
60685-1	.....
64838-001	85933 or 89454
64838-002	85933 or 89454
680091	85303

O.E.M. #	GABRIEL #
Hendrickson Truck Suspension Systems (Cont'd)	
70018	85303
70021	85303
70088	85307
AE76164-3	85307
AE76164-4	83225
BE76164-2	85303
BE76164-3	85307
BE76164-4	83225
S-1667	85000 or 89436
Highway Product	
A1-6-134	83207 or 89407
A1-6-135	83203 or 89436
Hino	
48500-1800	83216
48500-1801	83216
48500-1940	83141
48500-1941	83141
48500-1950	G60107
48500-3710	83126 or 89430
48500-3720	83140
48530-1120	83104
48530-1460	83215
48530-1620	83104
48530-1770	83215
48530-1880	83362
48530-1890	83104
48530-1900	83104
48530-1910	83216
48530-2050	83217
48530-2510	G60107
Hobbs Trailers	
680117	85300 or 89419
Holland - Binkley	
680298	85321
6898	83125
Hutchens Suspension	
9423-00	83203 or 89436
Hyster	
650150	83217
73516	83217
Ingersall Machine	
665472	665472
665904	665472
International (Navistar)	
1201-1043	83025
1201-1049	83025
1202-0012	83023
1202-0032	83016

O.E.M. #	GABRIEL #
International (Navistar) (Cont'd)	
1202-0042	83025
1202-0043	83032
1202-0044	83025
1202-0054	83021
1202-1043	83025
1202-1044	83025
1202-1212	83013
1202-1213	83005
1660846C1	83101
1660846C91	83101
1663471C1	83103
1663606C91	85027 or 89418
1664149C1	85029
1664524C1	85935
1664788C2	85316 or 89426
1667520C1	85058 or 89431
1675455C1	85003 or 89411
1675496C91	83636
1677707C1	85030 or 89440
1690035C1	85003 or 89411
2012769C2	83005
	83005
2015556C1	85316 or 89426
2015557C1	85030 or 89440
2018987C1	85003 or 89411
2023684C1	83015
	83015
2023685C1	83015
	83015
2025790C1	83013
	83013
2029200C91	85030 or 89440
2032533C1	85316 or 89426
2039549C1	85333
2039565C1	83100
204994R91	83225
206620R91	83216
206621R91	83216
206621R92	83216
208664C91	85307
210533R91	83225
210534R92	83225
210535R91	83225
210536R91	83225
210537R91	83225

O.E.M. INTERCHANGE

INTERCAMBIOS CON PIEZAS O.E.M.

ARTICLES DU MARCHÉ DES ÉQUIPEMENTS D'ORIGINE

O.E.M. #	GABRIEL #
International (Navistar) (Cont'd)	
210538R91	83225
210918R91	83215
210919R91	85307
210920R91	85308 or 89422
2200327C1	85332
2500013C1	83013
2503529C1	83025
2508326C1	83021
2508327C1	83025
287318C91	G60021
288920C91	83225
288921C91	83225
288921R92	83225
293009C91	85308 or 89422
294334C91	83216
3000070C91	83456 or 89447
306444C91	85012 or 89413
3085640C92	83216
308646C91	85012 or 89413
308648C91	83225
308649C91	83216
308650C91	83216
308650C92	83216
308664C91	85307
308668C91	85012 or 89413
308668C92	85012 or 89413
308669C91	85012 or 89413
320444C91	85012 or 89413
329316C92	85012 or 89413
350425C1	85300 or 89419
350426C1	85734
350426C91	85734
3533356C1	83135
3533356C2	83135
3533357C1	85928
3541456C1	85929
3544766C1	85930
3544768C1	85926
3549099C2	85923
3549100C1	85926
3553628C1	85927
3553628C2	85927
3558089C1	85925
3558089C2	85925
3558989C1	85925
3558989C2	85925
3571711C1	85316 or 89426
3571713C1	85333
3573265C1	85931
3578858C1	85926
3581106C1	85924
3581107C1	85924
3581107C2	85924
3581109C1	85924
3581109C3	85924
3584535C1	85924
3586883C1	85931
360444C91	85012 or 89413
383379C91	83308
384435C91	83216
426744R91	85303
426744R92	85303
452566C91	83225
453531C91	G60021
453556C91	85012 or 89413
453557C91	G60021
453561C91	83225
453562C91	83225
453564C91	85012 or 89413
453565C91	83225
453566C91	83225
453567C91	83216
453568C91	83225
453569C91	83225
453570C91	83216
453571C91	83216
453572C91	83309 or 89446
453574C91	85307
453575C91	83308
453576C91	85303
453576C92	85303
453577C91	85308 or 89422
453579C91	85308 or 89422
453597C91	83216
462557C91	85300 or 89419
462753C91	83216
467371C91	83225
467372C91	83225
467980C91	G60021
467983C91	85012 or 89413
467984C91	83216
467985C91	85012 or 89413
471201C91	85012 or 89413
471203C91	83308
472367C91	83318
472411C91	83456 or 89447
472412C91	83456 or 89447
472414C91	83318
474002C91	83308
477132C1	85303
480945C1	83014
480945C2	83014
501506C91	83317
501553C91	85003 or 89411
501905C91	83301
501906C91	83317
503550C1	83207 or 89407
503610C2	83207 or 89407
506911C91	.....
507202C1	85030 or 89440
534464C1	85734
537524C91	83123 or 89405
537525C91	83123 or 89405
540395C92	83613
548532C1	83103
56101 Z1030	85311 or 89424
56101 Z2000	85311 or 89424
56101 Z5008	83114
56101 Z5011	G60164
56101-Z5008	83114
586724C91	83456 or 89447
596329C1	85014
790335C91	83209 or 89414
873619C92	83314
873619C93	83314
873622C91	83308
874695R91	85012 or 89413
874695R92	85012 or 89413
874696R91	85012 or 89413
AMS 600102	85005 or 89430
AMS 600172	85030 or 89440
AMS 650420	85013 or 89414
AMS650420	85013 or 89414
Isuzu	
1-51630-160-0	.....
1-51630-167-0	.....
1-51630-168-1	G60107
1-51630-180-3	.....
1-51630-215-0	.....
1-51630-217-0	83114
1-51630-217-1	83114
1-51630-219-1	83114
1-51630-304-0	.....
8-94454-647-1	G60177
8-94454-986-0	G60177
8-94454-987-0	G60177
8-97083-027-0	G60177
8-97083-028-0	.....
8-97083-029-0	G60177
8-97119-729-0	.....
94033786	83114
9-51630-647-1	G60177
9-51630-666-0	85012 or 89413
9-51630-666-2	85012 or 89413
Jay Madsen	
3166657	85700
3192333	85700
Jifflox	
CP5222	85315
Kenworth	
1202-0012	83023
1202-0032	83016
1202-0042	83025
1202-0043	83032
1202-0044	83025
1202-0054	83021
1202-1043	83025
1202-1064	83024
1202-1065	83002
1202-1164	83031
1202-1264	83031
16725-01	83221
19495-01	85030 or 89440
47902-19	83123 or 89405
47902-24	83121
665092	83312 or 89409

O.E.M. INTERCHANGE

INTERCAMBIOS CON PIEZAS O.E.M.

ARTICLES DU MARCHÉ DES ÉQUIPEMENTS D'ORIGINE

O.E.M. #	GABRIEL #
Kenworth (Cont'd)	
665118	83312 or 89409
665331	83353
665565	85007 or 89412
665617	85031
665753	.....
665858	85070
665903	85900
665906	85902
665944	85900
665945	85902
671656	.....
671962	85936 or 89456
671963	85937
70701	85900
90044089	83124 or 89407
90045132	85909
96027.10545	83011
ACHB966	83136
C71-1002	85067 or 89451
K374-11	85001 or 89410
K374-13	83353
K374-13-1	83353
K374-14	83312 or 89409
K374-15	83353
K374-16	85001 or 89410
K374-26	85001 or 89410
K374-27	85001 or 89410
K374-28	85314 or 89425
K374-29	85310 or 89423
K374-3	83312 or 89409
K374-3-1	83312 or 89409
K374-32	85310 or 89423
K374-33	83312 or 89409
K374-4	85314 or 89425
K374-5	83312 or 89409
K374-7	85310 or 89423
K374-9	85310 or 89423

O.E.M. #	GABRIEL #
Kenworth (Cont'd)	
K374-C31	83312 or 89409
K374-C7	85310 or 89423
KW1102-B	83016
KWE90112	83016
PP2582.870	83012
Kwk-loc (jifflox)	
CP-5222	85315
Link Manufacturing	
1202-0012	83023
1202-0032	83016
1202-0042	83025
1202-0043	83032
1202-0044	83025
1202-0054	83021
1202-1042	83025
1202-1043	83025
1202-1044	83025
1202-1064	83024
1202-1065	83002
1202-1164	83031
1202-1212	83013
1202-1213	83005
LG40450	83016
LG40470	83016
Link/high-steer	
1210-0007	665937
632155	632155
Lodal, Inc.	
9960257	83122 or 89406
M.A.N. Bus	
134	85709
25-1700-106-654	85708
81-43701-6537	85709
81-43701-6538	85708
81-43701-6539	85708
81-43701-6543	85708
81-43701-6572	85708
81-43701-6573	85722
81-43701-6609	85709
9020M-1042	85709
Mack	
1202-0012	83023
1202-0032	83016
14QK-1200P4	83207 or 89407
14QK-140	85304
14QK-140P1	83225
14QK-142	85305
14QK-142AP1	83215
14QK-142P1	83215
14QK-143	83207 or 89407

O.E.M. #	GABRIEL #
Mack (Cont'd)	
14QK-145	85307
14QK-20001P2	85308 or 89422
14QK-2100D-P4	83207 or 89407
14QK-2100P1	83221
14QK-2100P2	83209 or 89414
14QK-2100P3	83207 or 89407
14QK-2100P4	83207 or 89407
14QK-2100P5	83221
14QK-2100P6	85036 or 89405
14QK-2100P7	83221
14QK-2100-P8	83242
14QK-2102	85304
14QK-2105	83209 or 89414
14QK-2107	83215
14QK-2107P1	83215
14QK-2107P2	83215
14QK-2107P3	83215
14QK-2108	83203 or 89436
14QK-2110	85305
14QK-2110P1	85305
14QK-2111	83019
14QK-2111-P2	83019
14QK-2111-P4	83019
14QK-2113M	85001 or 89410
14QK-2113P3	85001 or 89410
14QK-2113P4	85007 or 89412
14QK-2113P5	85001 or 89410
14QK-2113P6	85007 or 89412
14QK-2115	85305
14QK-2133M	85001 or 89410
14QK-2133M2	85001 or 89410
14QK-282P3	83216
14QK-288P2	83217
14QK-29001P2	85303
14QK-29301P1	83207 or 89407
14QK-29301P2	83207 or 89407
14QK-29302	83207 or 89407
14QK-29302P1	83207 or 89407
14QK-29303-P2	83014

O.E.M. #	GABRIEL #
Mack (Cont'd)	
14QK-3101M	.....
14QK-366	85036 or 89405
14QK-366P1	85036 or 89405
14QK-366P2	85036 or 89405
14QK-366P3	85036 or 89405
14QK-366P4	83209 or 89414
14QK-372M	83221
14QK-372M2	83209 or 89414
14QK-372M3	83122 or 89406
14QK-373	83215
14QK-375M	83123 or 89405
14QK-376	83003
14QK-377M	83215
14QK-378	83215
14QK-378M	83215
14QK-382	83018
14QK-382-P2	83018
14QK-390	83105
14QK-391AM	83041
14QK-391AM,AM2	83041
14QK-391BM	83041
14QK-392AM	85005 or 89430
14QK-392AM2	83123 or 89405
14QK-392AM3	85005 or 89430
14QK-392BM	85005 or 89430
14QK-392BM2	85321
14QK-392BM3	85005 or 89430
14QK-392M	85005 or 89430
14QK-393AM	83123 or 89405
14QK-393M	85010
14QK-396	85005 or 89430
14QK-396M	85005 or 89430
14QK-410M	83125
14QK-410M2	83137
14QK-410M3	83125
14QK-411	83007
14QK-411M	83007
14QK-413M4	83110
14QK-413M5	83138
14QK-413M6	83111
14QK413M7	83111

O.E.M. INTERCHANGE

INTERCAMBIOS CON PIEZAS O.E.M.

ARTICLES DU MARCHÉ DES ÉQUIPEMENTS D'ORIGINE

O.E.M. #	GABRIEL #
Mack (Cont'd)	
14QK-413M7	83111
14QK-414M	85906
14QK-414M2	85909
14QK-415M	83112
14QK-421M	85014
14QK-431M	85061 or 89450
202SU14	.....
20513881	85061 or 89450
4103-5000447861	83105
4103-5000546892	83105
47902-25	83125
47902-9	83123 or 89405
4940654	83216
5533699	85302 or 89420
5554184	85302 or 89420
651012	83221
651103	85036 or 89405
651151	83209 or 89414
70042	85302 or 89420
V10234121	83105
V10242320	83105
Maeco	
12608	83125
12788	83216
12866	83207 or 89407
1668722	85030 or 89440
16950	83118
6025	83122 or 89406
6026	83204
70018	85303
70021	85303
70029	85308 or 89422
70034	85302 or 89420
70039	85303
70041	85305
70042	85302 or 89420
70088	85307
70127	85006 or 89401
70128	85006 or 89401
70162	85716

O.E.M. #	GABRIEL #
Maeco (Cont'd)	
70163	85302 or 89420
70164	85716
70300	85320 or 89429
70317	89432
70334	85316 or 89426
70397	85006
70652	85030 or 89440
70663	85013 or 89414
74039	85303
Marmon	
1202-0054	83021
1-7001	83216
37-1-1	83122 or 89406
51-139-28	85003 or 89411
51-163-7	83123 or 89405
576451	83122 or 89406
665147	83216
Matson School Bus	
5392387	85303
Mc Neilus Truck & Man. Company	
600.115994B	632147
600.11599C	630811
Mercedes	
344-323-75	83100
Meritor	
202447	85919
21227751	87015
671020	87015
A-3280-M-9711	85919
A-7805L-1000	85919
A-7805L-1026	87015
A-7805P-1030	85737
Mitsubishi-Fuso	
MB025382	.....
MB161497	G60003
MB161741	.....
MB161748	.....
MB294287	.....
MC110328	.....
MC114595	G60031
MC809295	.....
MC809390	83103
MC811327	.....
MC813135	83456 or 89447
MC813511	G60046

O.E.M. #	GABRIEL #
Mitsubishi-Fuso (Cont'd)	
MC814614	85009
MC826268	G60164
Mohawk	
01-0100-905	85303
050134508	85718
10134504	85715
10134506	85714
10234503	85714
10234504	85717
1235233	85736
20273544	83203 or 89436
22012082	85702
4968853	83216
6-367-7	85305
695195	85707
695196	85707
97-2201-00007	85703
97-2201-00011	85704
97-9999-02320	85704
MM-6886	83207 or 89407
MM-6957	83225
MM-74029	85308 or 89422
Mor-ryde Suspension	
U0109-014	83400
U0109-7	G60028
Motor Coach Industries	
12B-5-1	85700
12G-5-1	85700
12J-5-10	85733
12J-5-11	85313
12J-5-2	85312
12J-5-3	85313
12J-5-4	85312
12J-5-6	85313
12J-5-7	85312
12J-5-9	85700
12K-5-1	.....
12L-5-100	85727
12L-5-114	85727
12L-5-58	85728
12L-5-67	.....
12L-5-69	85700
12L-5-70	85700
12L-5-71	85708
12L-5-72	.....
12L-5-88	85729
12L-5-89	85729
12L-5-96	85728
12L-5-97	85728
12L-5-99	.....
3178154	85735
3178157	85700
5316984	85313

O.E.M. #	GABRIEL #
Motor Coach Industries (Cont'd)	
680322	85704
680470	85713
690029	85700
695125	85704
97-2201-00151	85700
Muncie Reclamation	
H53-20415-006	85051
MR1623	85700
MR1710	85713
MR1751	85713
MR1763	85300 or 89419
MR1765	85713
MR25767	85702
MR2960	85702
MR2961	85701
MR2996	85704
MR2997	85703
MR3303	85709
MR3304	85710
MR3304H	85709
MR3306	85705
MR3307	85707
MR3650	85707
MR-6394	85723
MR6535	85708
MR-6536	.....
MR7388	85710
National Coach Corp	
C800853	83207 or 89407
Neoplan Bus	
24-1700-106-149	83216
24-1700-999-362	85009
25-1700-101-426	85705
AA1002002	85705
AA1002003	85705
AA1802002	85705
AC1002002	85705
AC1002003	85705
BN1002002	85009
BT1002011	83216
CI 1002003	85705
CL1002003	85705
DT1002002	85707
DT1802002	85705
DZ1002002	85705
GJ1002002	85706
GJ1002003	85705
MM1002002	85705
MM1002003	85705

O.E.M. INTERCHANGE

INTERCAMBIOS CON PIEZAS O.E.M.

ARTICLES DU MARCHÉ DES ÉQUIPEMENTS D'ORIGINE

O.E.M. #	GABRIEL #
New Flyer	
009863	85722
015813	85708
064845	85711
16415	85727
Neway (Holland) Suspension Systems	
57639	85000 or 89436
57643	85013 or 89414
6025	83122 or 89406
6026	83204
90044001	85005 or 89430
90044008	85000 or 89436
90044011	85004
90044012	85006
90044016	85300 or 89419
90044017	83204
90044025	83209 or 89414
90044046	83123 or 89405
90044071	85000 or 89436
90044081	85000 or 89436
90044086	85000 or 89436
90044089	83124 or 89407
90044089C	83124 or 89407
90044095	83203 or 89436
90044162	83128
90044448	85051
90044625	83125
90044626	83126 or 89430
90044642	83127
90044679	83122 or 89406
90044680	83125
90044681	83204
90044682	83209 or 89414
90044683	83122 or 89406
90044684	83124 or 89407
90044685	83128
90044686	85051
90044687	83125

O.E.M. #	GABRIEL #
Neway (Holland) Suspension Systems (Cont'd)	
90044688	83122 or 89406
90044769	83207 or 89407
90044770	83207 or 89407
90044794	83127
90044833	85052
90044834	85052
90044868	85045
90044878	83635
90044907	83635
90044915	89437
90044968	.....
90044977	83115
90044978	85059
90044979	83113
90044981	85000 or 89436
90044982	85000 or 89436
90044989	85915
90044991	.....
90044992	85000 or 89436
90045002	85906
90045019	85913
90045028	85907
90045040	83130
90045048	85905
90045049	85905
90045050	85914
90045053	85908
90045054	85051
90045068	89441
90045075	85911
90045080	85912
90045083	85910
90045096	85916
90045099	85906
90045110	83121
90045132	85909
90045138	85910
90045175	85916
90045188	85910
90045298	83128
90045299	85000 or 89436
90045338	.....
90045466	89406
900455002	.....
900455003	85323 or 89436
AR-1008	85006
AR-1141	83204
AR-1141-C	83204

O.E.M. #	GABRIEL #
Neway (Holland) Suspension Systems (Cont'd)	
AR-1202	85300 or 89419
AR-134-C	85005 or 89430
AR-1404	85301
AR-1425	85301
AR-1434	83203 or 89436
AR-1654	83209 or 89414
AR-1822	85304
AR-2451	83203 or 89436
AR-2598	83123 or 89405
AR-718-C	83203 or 89436
AR-718-C-HD	85000 or 89436
AR-781	83203 or 89436
AR-958	83207 or 89407
AR-995	85734
Neway Suspension Systems	
632155	632155
Nissan	
56110-Z5008	83114
56110-Z5011	G60164
Nova Bus	
22012079	85701
22045526	85702
22052014	85702
4975515	85701
695117	85701
74410	85701
97-2201-00151	85700
G1011822	85702
G1011823	85710
G1101590	85713
Ole Granning	
1086	83217
Orion Bus Industries	
010134501-4	85307
010134504-4	85715
010134505-4	85715
010134506-4	85717
010134508-4	85718
010134509-4	85717
010234503-4	85308 or 89422
010234506-4	85714
020117504	85720
020273541-4	85000 or 89436

O.E.M. #	GABRIEL #
Orion Bus Industries (Cont'd)	
020273547-4	85719
020273549	85719
050134501-4	85716
050134502-4	85718
050134506-4	85718
050134508	85718
0501345-10	85732
0501345-11	85718
0501345-13	85732
050230501	85716
050231505	85716
050231507	85716
20117501	85720
20117503	85720
20117505	85720
20273541	83203 or 89436
20273544	83203 or 89436
20273546	85719
20273547	85719
20273548	85719
20273549	85719
680091	85303
680352	85711
695343	85732
A-4890	85712
M340027	.....
OB3166657	85700
Oshkosh Motors	
12405F	85734
12405F-1	85303
1398980	83127
1445910	85300 or 89419
1573270	83207 or 89407
1573280	83221
1583470	85051
1745500	89430
2034140	632155
2173340	85303
2218640	83009
26228-A	83122 or 89406
2JD137	83119
40-0242	83312 or 89409
40-4845	85304
40-4951	85316 or 89426
40-5348	85058 or 89431
40-6967	85030 or 89440
5353054	85303
5361994	85734

O.E.M. INTERCHANGE

INTERCAMBIOS CON PIEZAS O.E.M.

ARTICLES DU MARCHÉ DES ÉQUIPEMENTS D'ORIGINE

O.E.M. #	GABRIEL #
Oshkosh Motors (Cont'd)	
665040	85303
665060	83122 or 89406
690049	85303
GBL654875	83117
Osterlund Truck	
59011	83214
680117	85300 or 89419
Ottawa Truck	
53540451	85300 or 89419
59009	83217
90013787	85310 or 89423
90027577	85720
9007342	85303
Pacific Truck & Trailer	
3178157C	85735
507202CI	85030 or 89440
Page Suspension	
1080099	83203 or 89436
1081933	83204
665133	83203 or 89436
665267	85029
A-2212	85029
Pai Corp	
HSA-5067	85305
HSA-5080	83221
HSA-5095	83215
Peerless Trailer	
120-1	83125
72-61	83125
Peterbilt	
02-00376	85302 or 89420
02-00495	85302 or 89420
02-01787	85062 or 89408
02-01890	85012 or 89413
02-02061	85013 or 89414
02-02142	85036 or 89405
02-02225	85012 or 89413
02-02736	85302 or 89420
02-02737	85062 or 89408

O.E.M. #	GABRIEL #
Peterbilt (Cont'd)	
02-02738	85012 or 89413
02-02739	85013 or 89414
02-02740	85036 or 89405
02-02741	85012 or 89413
02-02742	85062 or 89408
02-03020	85910
02-04010	85012 or 89413
03-01635	85308 or 89422
03-04176	85308 or 89422
03-04628	85336
03-04629	85311 or 89424
03-05384	85033 or 89427
03-06084	85033 or 89427
03-07420	85336
03-07421	85311 or 89424
03-07423	85033 or 89427
03-07424	85311 or 89424
03-08781	85069 or 89455
1202-0012	83023
1202-0032	83016
1202-0054	83021
1202-1044	83025
20-16755	83042
20-18744	..
23-08233	85308 or 89422
23-10393	85308 or 89422
23-12262	85012 or 89413
29-02455	83008
29-06005	83035
29-06032	83035
665174	85060
665633	85033 or 89427
680026	85302 or 89420
680586	85311 or 89424
680599	.....
90044011	85004
96027.1054	83011

O.E.M. #	GABRIEL #
Peterbilt (Cont'd)	
ACHB966	83136
C71-6000	85067 or 89451
PP2582.870	83012
Prevost	
01-0100-905	85303 or 89422
12T-1-13	85303 or 89422
63-0001	85308 or 89422
63-0080	85713
63-0091	85736
630134	85329
630136	85330
63-1013	85329
690060	85713
74939852	85308 or 89422
Raydan Manufacturing	
700115	85712
Rex	
102-31602-01	630811
Reyco Suspension	
12885-01	85300 or 89419
12885-03	85300 or 89419
12887-01	85013 or 89414
12887-02	85013 or 89414
14954-01	83217
16230-01	85702
16725-01	83221
16824-01	85006
17142-01	85001 or 89410
17146-01	83209 or 89414
17358-01	85030 or 89440
17403-01	85003 or 89411
17408-01	85005 or 89430
17794-01	83215
18146-01	85313
18163-01	83207 or 89407
18164-01	83122 or 89406
18165-01	85006
18166-01	85704
18286-01	89414
18800-01	85000 or 89436

O.E.M. #	GABRIEL #
Reyco Suspension (Cont'd)	
19495-01	85030 or 89440
19623-01	83123 or 89405
19824-01	85006
20125-01	85030 or 89440
20126-01	89440
20129-01	85713
20960-01	83204
21497-01	85005 or 89430
23524-01	85738
23614-01	85717
24392-01	85051
700098-01	83203 or 89436
700098-03	85052
702135-01	85045
702136-01	85052
702209-01	85014
Reyco/granning	
701071-01	665937
Ridewell Corp.	
1310002	665937
Ridewell Corporation	
1250005	85901
1250546B000	85006
1250563B000	85000 or 89436
1250789B000	85014
1252607B000	85702
1253069B000	85005 or 89430
1254025B000	85712
1270563B000	85000 or 89436
1270563B003	85934
1270789B000	85014
665267	85029
AS1894B	.....
AS30698	85005 or 89430
AS3069B	85005 or 89430
AS546B	85006
AS563B	83203 or 89436
AS575B	85005 or 89430
AS789B	85014
AS789B000	85014
S2607B	85702
S4025B	87001
S5477B	85307
S5478B	85307

O.E.M. INTERCHANGE

INTERCAMBIOS CON PIEZAS O.E.M.

ARTICLES DU MARCHÉ DES ÉQUIPEMENTS D'ORIGINE

O.E.M. #	GABRIEL #
Ridewell Corporation (Cont'd)	
S5813B	85704
S5878B	83207 or 89407
S6009B	83203 or 89436
S7120B	85304
S7172B	83207 or 89407
S7249B	85307
S7365B	85305
Sicard	
3166657	85700
Spartan Motors	
0272-SS5	85712
59011	83214
78068	85304
AS 4025B	85734
Spring Valley	
632155	632155
Sterling	
18-45067-000	83034
F6HZ-5K407-AB	83034
F6HZ-5K407-BA	83033
F8HT-5K407-AA	83033
Sterling Truck	
16-15817-000	85724 or 89443
47902-28	85013 or 89414
57241-2	83109
6803230200	85043
6803230300	85006
6803260000	83120
AT-560	G61150
AX267A	83309 or 89446
AX310	83215
C4HZ-18124-E	83309 or 89446
C4TZ-18124-AB	83308 or 89435
D8HZ-18124-A	85301
E6HZ-18124-A	85301
E6HZ-18124-D	85301
E6HZ-18125-D	83215
E7HZ-18124-A	85301
E7XZ-18124-A	G60023
E7XZ-18125-B	G60024
E9HZ-18124-A	83309 or 89446
F0HZ-18124-B	85006
F1HZ-18124-A	83309 or 89446
F1HZ-18124-B	83308
F1HZ-18124-D	85006 or 89401

O.E.M. #	GABRIEL #
Sterling Truck (Cont'd)	
F1HZ-18124-E	85006 or 89401
F1HZ-18124-H	85040
F1HZ-18124-J	83308
F1HZ-18124-K	89402
F2HZ-18124-A	85376
F2HZ-18124-B	85301
F5HZ-18124-A	83314
F5HZ-18124-B	83107
F5HZ-18124-C	85063
F5HZ-18124-D	83125
F5HZ-18125-A	85314 or 89425
F5HZ-18125-B	85001 or 89410
F6HT-18045-AA	85054 or 89438
F6HT-18045-AC	85054 or 89438
F6HT-18045-BC	85047 or 89435
F6HT-18045-CC	85055 or 89439
F6HT-18045-EB	85055 or 89439
F6HT-18045-EC	85055 or 89439
F6HT-18045-GC	85030 or 89440
F6HT-18045-HB	85054 or 89438
F6HT-18045-HC	85054 or 89438
F6HT-18045-JB	83200
F6HT-18045-JC	83200
F6HT-18045-KA	83200
F6HT-18045-LA	85376
F6HT-18080-CA	85314 or 89425
F6HT-18080-FC	85013 or 89414
F6HT-18124-JC	83200
F6HT-18124-KA	83200
F6HZ-18124-A	85054 or 89438
F6HZ-18124-B	83308 or 89435
F6HZ-18124-C	85055 or 89439
F6HZ-18124-D	85055 or 89439
F6HZ-18124-E	85055 or 89439
F6HZ-18124-F	85055 or 89439
F6HZ-18124-G	85054 or 89438

O.E.M. #	GABRIEL #
Sterling Truck (Cont'd)	
F6HZ-18124-H	85054 or 89438
F6HZ-18124-J	83200
F6HZ-18125-B	83109
F6HZ-18125-D	85013 or 89414
F81A-18045-AGB	G61150
XC45-18080-BA	85724 or 89443
Stoughton Trailers Inc.	
HTA20001	85000 or 89436
HTA20002	85000 or 89436
NW90044162	83128
NW90044448	85051
NW90044978	85059
NW90044979	83113
RT18165-01	85006
Suspensions Inc.	
200188	632155
Thomas School Bus	
61300112	83613
6130-0114	89437
61300285	83102
6130029	85712
61310101	85736
61310102	85308 or 89422
61310103	85308 or 89422
61310104	85713
61310232	85000 or 89436
614966	85307
614974	85304
63-0001	85308 or 89422
651442	83102
680010	85304
680054	85307
680088	85713
728802	85736
A-4890	85712
P101977	85010
Timbren Industries	
665804	85939
Trailmobile Canada Corp.	
43-4-235	85051
43-4-236	85029
43-4-237	85000 or 89436
43-4-239	83207 or 89407
43-4-241	85006

O.E.M. #	GABRIEL #
Trailmobile Canada Corp. (Cont'd)	
43-4-277	85000 or 89436
43-4-278	85059
43-4-279	83204
43-6-028	85000 or 89436
43-6-118	85000 or 89436
43-6-137	85006
43-6-158	85013 or 89414
43-6-164	83207 or 89407
43-8-002	83209 or 89414
43-8-011	83207 or 89407
43-8-013	85000 or 89436
43-8-014	85013 or 89414
43-8-015	85006
43-8-022	83225
43-8-031	85029
90044089	83124 or 89407
90044625	83125
90044642	83127
90044977	83115
90044978	85059
90044979	83113
90044992	85000 or 89436
90045054	85051
A-2212	85029
Transportation Mfg. Corp	
12B-5-1	85700
12G-5-1	85700
12J-5-10	85733
12J-5-11	85313
12J-5-2	85312
12J-5-3	85313
12J-5-4	85312
12J-5-6	85313
12J-5-9	85700
12L-5-69	85700
12L-5-70	85700
12TA-01-13	85303 or 89422
22012079	85701
22024673	85710
22045526	85702
22046485	85710
22052014	85702
4975515	85701
680349	85702

O.E.M. INTERCHANGE

INTERCAMBIOS CON PIEZAS O.E.M.

ARTICLES DU MARCHÉ DES ÉQUIPEMENTS D'ORIGINE

O.E.M. #	GABRIEL #
Transportation Mfg. Corp (Cont'd)	
680350	85710
680470	85713
695117	85701
695273	85710
695279	85710
74410	85701
G1011822	85702
G1101590	85713
Twin Coach	
90044089	83124 or 89407
90044089C	83124 or 89407
90044162	83128
AR-718-C-HD	85000 or 89436
AR-958	83207 or 89407
United Manufacturing	
K-96-41	85304
Volvo	
02-7005976	83400
02-7005977	83400
03-1106460	85005 or 89430
1-0200-32-888-1	83104
1091347	83125
1091348	83122 or 89406
1091349	83204
1091350	83207 or 89407
1091351	83209 or 89414
1091353	83215
1091354	83216
1091355	83217
1091357	83219
1091358	83456 or 89447
1091359	83123 or 89405
1091360	83303
1091361	83304
1091362	83309 or 89446
1091363	83221
1091364	83312 or 89409
1091365	83400
1091366	83401
1091367	85000 or 89436
1091368	85003 or 89411
1091370	85006

O.E.M. #	GABRIEL #
Volvo (Cont'd)	
1091371	85300 or 89419
1091372	85301
1091373	85302 or 89420
1091374	85303
1091375	85304
1091376	85305
1091377	85307
1091378	85308 or 89422
1091379	85310 or 89423
1091384	85735
1093100	85027 or 89418
1093174	83353
1093176	85024 or 89416
1093177	85025
1093178	85026 or 89417
1093180	85030 or 89440
1202-0012	83023
1202-0032	83016
1505190	85722
1590439	83104
1591501	85722
1591735	83104
1593843	83215
1716824	85304
20433424	85061 or 89450
20433425	85066 or 89448
20433427	85065
20485633	85933 or 89454
20513881	85061 or 89450
20551628	85066 or 89448
22012065	85304
22046483	85304
22052336	85304
3082284	83400
3092842	85061 or 89450
3130140	85315
3171696	85307
3172948	85303
35901-0001	83209 or 89414
35901-0003	85301
35901-0004	83219
35901-0005	83219
35901-0008	85060

O.E.M. #	GABRIEL #
Volvo (Cont'd)	
35901-0011	83123 or 89405
35901-0017	83314
35901-0022	83635
35901-3201	85024 or 89416
35901-3406	85305
35901-3409	85304
35901-3410	85307
35901-3413	85006
35901-3420	85303
37001-5	83401
37301-0001	85013 or 89414
37301-0008	83400
37301-0016	85026 or 89417
37301-0018	85005 or 89430
37301-0020	.....
37301-0021	85026 or 89417
37301-3201	85027 or 89418
37301-3202	85026 or 89417
3915917	85319 or 89428
3915947	85001 or 89410
3915948	85311 or 89424
3916352	85013 or 89414
3919055	85007 or 89412
3919056	83203 or 89436
3919057	83225
3919526	83314
3919561	85314 or 89425
3919585	83209 or 89414
3919588	83216
3919958	85046 or 89434
3919964	85304
3945806	89417
3945807	89416
3945808	89407
3945809	89410
3945810	89420
3945811	89409
3945812	89423
3945813	89428
3945814	89424
3945815	89406

O.E.M. #	GABRIEL #
Volvo (Cont'd)	
3945816	89430
3945817	89422
3945818	89415
3945819	89411
3945820	89413
3945821	89419
3946210	83103
3946219	83400
3949241	85061 or 89450
3953643	85040
47902-24	83121
4940640	83216
494-660	83219
4975479	83400
4975480	83400
4975549	83216
530596	85308 or 89422
5322338	83214
5513989	83216
5531435	85307
5531436	85307
5531437	85307
5534430	85303
5534447	85303
5549925	85304
5554959	83401
57241-3	83112
629398	85307
629501	85307
646220	85734
64838-001	85933 or 89454
64838-002	85933 or 89454
66010-0007	83004
66010-0008	83004
66010-0016	85025
668302	83216
676081	83401
676082	83401
6771501	85040
6772218	85040
6775411	85040
6775412	85040
6790756	83215
6794358	85040
6857668	83105
6876828	83105
6876831	.....
8026658	85046 or 89434
8056892	85023 or 89415
8060026	85065
8061167	.....

O.E.M. INTERCHANGE

INTERCAMBIOS CON PIEZAS O.E.M.

ARTICLES DU MARCHÉ DES ÉQUIPEMENTS D'ORIGINE

O.E.M. #	GABRIEL #
Volvo (Cont'd)	
8065787	85026 or 89417
8071524	85024 or 89416
8073212	85065
8075257	85065
8077874-P01	85047 or 89435
8078195	85061 or 89450
8078546	83028
8078547	83029
8086053	85047 or 89435
8086651	85066 or 89448
8162662	83004
8168617	83030
8169859	85047 or 89435
8174749	85906
Volvo-Autocar	
03-1106460	85005 or 89430
1011839	83216
28CFG-910	83216
28R010	83216
35901-3201	85024 or 89416
37301-3201	85027 or 89418
37301-3202	85026 or 89417
660186	83216
8026658	85046 or 89434
8071524	85024 or 89416
849246	83216
Wabash Trailer	
202447	85919
203447	85919
Watson & Chalin Mfg. Inc.	
10147	83203 or 89436
10147HD	85000 or 89436
10148	83204
10634	.....
11418	646155
11604	83125
11724	83123 or 89405
12128	85005 or 89430
17079	85300 or 89419

O.E.M. #	GABRIEL #
Watson & Chalin Mfg. Inc. (Cont'd)	
17186-01	85323 or 89436
17297	85938
17300	85052
17306	85938
3946219	83400
665727	85005 or 89430
Western Star	
02-7005976	83400
02-7005977	83400
04-9041375	85315
1011839	83216
1202-0012	83023
1202-0032	83016
28R010	83216
35066-4413	83122 or 89406
35901-0001	83209 or 89414
35901-3406	85305
35901-3409	85304
35901-3410	85307
35901-3413	85006
35901-3420	85303
35901-4403	85060
37301-3401	85053 or 89442
37301-3404	85053 or 89442
37301-3405	85053 or 89442
37301-3409	85053 or 89442
37301-3412	85053 or 89442
37390-4401	85053 or 89442
37390-4402	85053 or 89442
37390-4403	85053 or 89442
47902-13	83122 or 89406
47902-24	83121
47902-8	83122 or 89406
57241-1	83111
66010-3404	83022
66010-3405	83026
66010-3406	83027
676081	83401
676082	83401
725470	83010
90044025	83209 or 89414

O.E.M. #	GABRIEL #
Western Star (Cont'd)	
90044907	83635
90045099	85906
CP-5222	85315
Western Unit "Stabilaire" Suspension	
101030	85307
101364	85305
4939967	85308 or 89422
80370	85304
80600	85300 or 89419
Workhorse	
7805-X-1012	85919

O.E.M. #	GABRIEL #

Manufacturer No. to Catalog No. Interchange
Intercambio del número de fabricantes al número de catalogo
Échange du numéro du fabricant au numéro du catalogue

Mfg. #	Catalog #
630811	630811
632147	632147
632155	632155
646155	646155
727600	83200
727602	83218
727603	83203
727604	83204
727607	83207
727609	83205
727609	83209
727614	83214
727615	83215
727616	83216
727617	83217
727619	83219
727621	83221
727621	83310
727625	83225
727628	83301
727630	83303
727631	83304
727635	83308
727636	83309
727639	83312
727641	83314
727644	83317
727645	83318
727692	83353
727741	83362
727761	83613
728800	87000
728803	87003
728804	87004
728806	87006
728811	87011
728812	87012
728813	87013
736800	83400
736801	83401
737560	G60069
737654	G60043
737900	G60012
737901	G60031
737902	G60048
737903	G60046
737904	G60051
737905	G60049
737906	G60063
737907	G60007
737908	G60062
737909	G60087
737910	G60033
737914	G60044
737915	G60017
737917	G60035
737918	G60050
737919	G60101
737922	G60011
737923	G60023
737924	G60003
737925	G60008
737926	G60015
737927	G60078
737928	G60076
737929	G60077
737930	G60079
737931	G60014
737932	G60042
737933	G60038
737934	G60039
737935	G60021
737936	G60024
737937	G60010
737938	G60028
737939	G60029
737941	G60053
737943	G60097
737944	G60098
737946	G60100
737948	G60030
737949	G60103
737952	G60041
737956	G60083
737957	G60026
737965	G60099
737973	G60086
737974	G60104
737976	G60080
737984	G60075
737987	G60084
737993	G60081
737994	G60091
737995	G60096
737996	G60106
747500	G60109
747501	G60110
747502	G60111
747504	G60114
747506	G60120
747515	G60129
747529	G60143
747530	G60144
747538	G60153
747539	G60154
747547	G60161
747548	G60162
747549	G60163
747553	G60171
747561	G60180
747562	G60181
747565	G60184
747567	G60186
747575	G60194
747578	G60196
747579	G60197
747585	G60204
747586	G60205
747587	G60206
747682	G61113
747684	G61115
747685	G61116
747687	G61118
747690	G61121
747691	G61122
747900	G60112
747901	G60113
747902	G60119
747903	G60121
747904	G60122
747905	G60128
747906	G60136
747907	G60137
747908	G60152
747909	G60158
747910	G60160
747911	G60164
747912	G60002
747913	G60045
747914	G60047
747915	G60064
747916	G60065
747917	G60066
747918	G60067
747919	G60068
747921	G60070
747922	G60071
747923	G60072
747924	G60073
747925	G60165
747926	G60176
747927	G60177
747928	G60179
747929	G60182
747930	G60183
747931	G60185
747932	G60199
747933	G60214
747934	G60216
747935	G60217
747936	G60218
747937	G60219
747938	G60221
747939	G60222
747940	G60226
747942	G60232
747943	G60233
747944	G60235
747954	G60249
747955	G60250
747956	G60251
747958	G60253
747960	G60255
747962	G60257
747963	G60258
747964	G60259
747965	G60260
747968	G60263
747969	G60264
747970	G60265
747974	G60269
748050	G60302
748057	G60303
748058	G60304
748066	G60307
748077	G60309
748081	G60310
748085	G60313
748329	G60353
748338	G60354
748607	G60308
748608	G60301
748609	G60312
748612	G60329
748613	G60330
748614	G60306
748615	G60305
748652	G60338
750611	G61139
750612	G61140
750614	G61112
750615	G61150
750619	G61151
750622	G61144
750626	G61148
750627	G61149
750628	G61152
750629	G61153
750630	G61154
750631	G61155
750632	G61156
750634	G61158
750635	G61159
753528	G60105
753530	G60074
753587	G60052
797983	G60107
83001	83001
83002	83002
83003	83003
83004	83004
83005	83005
83006	83006
83007	83007
83008	83008
83009	83009
83010	83010
83011	83011
83012	83012
83013	83013
83014	83014
83015	83015
83016	83016
83017	83017
83018	83018
83019	83019
83020	83020
83021	83021
83022	83022
83023	83023
83024	83024
83025	83025
83026	83026
83027	83027
83028	83028
83029	83029
83030	83030
83031	83031
83032	83032
83033	83033
83034	83034
83035	83035
83038	83038
83039	83039
83040	83040
83041	83041
83042	83042
83100	83100
83101	83101
83102	83102
83103	83103
83104	83104
83105	83105
83106	83106
83107	83107
83109	83109
83110	83110
83111	83111
83112	83112
83113	83113
83114	83114
83115	83115
83116	83116
83117	83117
83118	83118
83119	83119
83120	83120
83121	83121
83122	83122
83123	83123
83124	83124
83125	83125
83126	83126
83127	83127
83128	83128
83130	83130
83131	83131
83132	83132
83134	83134
83135	83135
83136	83136
83137	83137
83138	83138
83140	83140

Manufacturer No. to Catalog No. Interchange
Correspondencia del No. de fabricante con el No. de catálogo
Correspondance n. du fabricant/n. de catalogue

Mfg. #	Catalog #	Mfg. #	Catalog #	Mfg. #	Catalog #	Mfg. #	Catalog #	Mfg. #	Catalog #	Mfg. #	Catalog #
83141	83141	85048	85048	85316	85316	85714	85714	85916	85916	89415	89415
83142	83142	85049	85049	85317	85317	85715	85715	85918	85918	89416	89416
83143	83143	85050	85050	85318	85318	85716	85716	85919	85919	89417	89417
83144	83144	85051	85051	85319	85319	85717	85717	85920	85920	89418	89418
83242	83242	85052	85052	85320	85320	85718	85718	85921	85921	89419	89419
83634	83634	85053	85053	85321	85321	85719	85719	85922	85922	89420	89420
83635	83635	85054	85054	85322	85322	85720	85720	85923	85923	89422	89422
83636	83636	85055	85055	85323	85323	85722	85722	85924	85924	89423	89423
85000	85000	85056	85056	85324	85324	85723	85723	85925	85925	89424	89424
85001	85001	85057	85057	85325	85325	85724	85724	85926	85926	89425	89425
85003	85003	85058	85058	85326	85326	85727	85727	85927	85927	89426	89426
85004	85004	85059	85059	85327	85327	85728	85728	85928	85928	89427	89427
85005	85005	85060	85060	85328	85328	85729	85729	85929	85929	89428	89428
85006	85006	85061	85061	85329	85329	85730	85730	85930	85930	89429	89429
85007	85007	85062	85062	85330	85330	85731	85731	85931	85931	89430	89430
85009	85009	85063	85063	85331	85331	85732	85732	85932	85932	89431	89431
85010	85010	85064	85064	85332	85332	85733	85733	85933	85933	89432	89432
85011	85011	85065	85065	85333	85333	85734	85734	85934	85934	89434	89434
85012	85012	85066	85066	85334	85334	85735	85735	85935	85935	89435	89435
85013	85013	85067	85067	85335	85335	85736	85736	85936	85936	89436	89436
85014	85014	85069	85069	85336	85336	85737	85737	85937	85937	89437	89437
85023	85023	85070	85070	85337	85337	85738	85738	85938	85938	89438	89438
85024	85024	85071	85071	85338	85338	85900	85900	85939	85939	89439	89439
85025	85025	85072	85072	85376	85376	85901	85901	87001	87001	89440	89440
85026	85026	85300	85300	85700	85700	85902	85902	87002	87002	89441	89441
85027	85027	85301	85301	85701	85701	85903	85903	89401	89401	89442	89442
85029	85029	85302	85302	85702	85702	85904	85904	89402	89402	89443	89443
85030	85030	85303	85303	85703	85703	85905	85905	89403	89403	89446	89446
85031	85031	85304	85304	85704	85704	85906	85906	89405	89405	89447	89447
85033	85033	85305	85305	85705	85705	85907	85907	89406	89406	89448	89448
85036	85036	85307	85307	85706	85706	85908	85908	89407	89407	89449	89449
85040	85040	85308	85308	85707	85707	85909	85909	89408	89408	89450	89450
85042	85042	85310	85310	85708	85708	85910	85910	89409	89409	89451	89451
85043	85043	85311	85311	85709	85709	85911	85911	89410	89410	89453	89453
85044	85044	85312	85312	85710	85710	85912	85912	89411	89411	89454	89454
85045	85045	85313	85313	85711	85711	85913	85913	89412	89412	89455	89455
85046	85046	85314	85314	85712	85712	85914	85914	89413	89413	89456	89456
85047	85047	85315	85315	85713	85713	85915	85915	89414	89414		

STEP 1: Measure the diameter of the dust tube and cylinder to determine the series.

1ER PASO Mida el diámetro del tubo de polvo y del cilindro para determinar la serie.

1RE ÉTAPE Mesurez le diamètre du tube de poussière et du cylindre pour déterminer la série.

EXTERNAL DIMENSIONS
DIMENSIONES EXTERNAS DIMENSIONS EXTÉRIEURES

A 83200

1⅜" **Slim** **Delgado** **Mince**

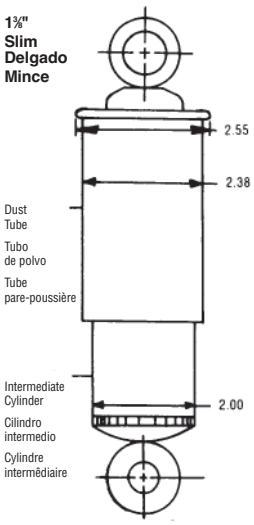

B 83300

1⅜" **Bulged** **Abombado** **Bombé**

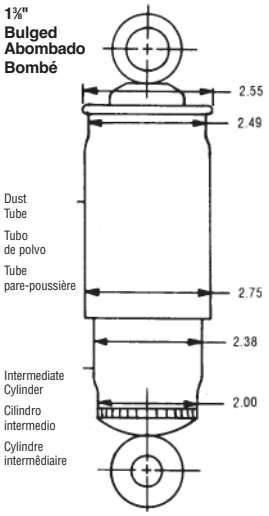

C 85000

1⅝" **Slim** **Delgado** **Mince**

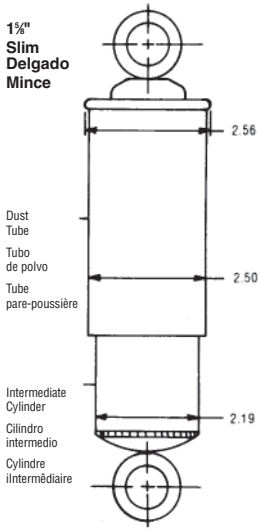

D 85300 & 85700

1⅝" **Bulged** **Abombado** **Bombé**

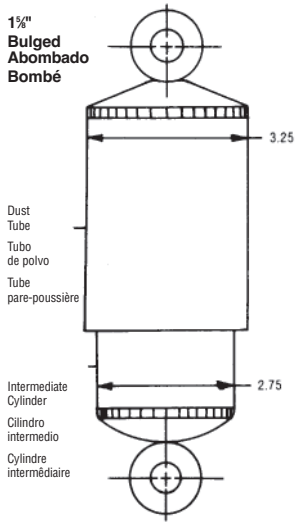

E 87000

2¼"

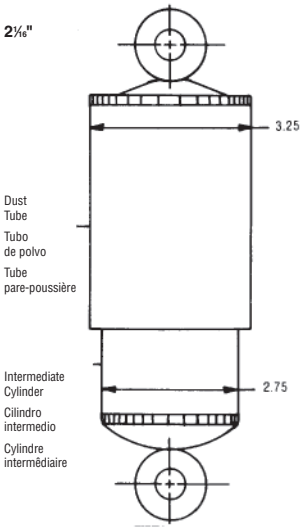

F 83400

1⅛" **Slim** **Delgado** **Mince**

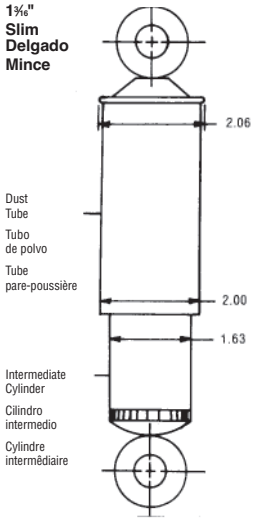

G 85900 & 89400

1⅝"

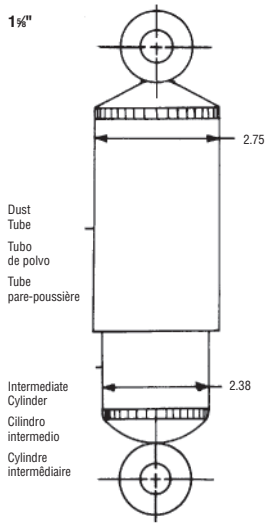

STEP 2: Identify the mounting style. Measure fully extended and fully collapsed lengths at the locations indicated for mounting style.

2° PASO Identifique el método de fijación. Mida la extensión maxima y la compresión maxima en los lugares indicados para la fijación.

2E ÉTAPE Identifiez la méthode de fixation. Mesurez la longueur en pleine extension et en pleine compression, aux endroits indiqués pour la méthode de fixation.

HOW TO MEASURE EXTENDED & COLLAPSED LENGTHS OF SHOCK ABSORBERS
COMO MEDIR LAS LONGITUDES EXTENDIDA Y COMPRIMIDA DE LOS AMORTIGUADORES
COMMENT MESURER LES LONGUEURS ALLONGÉ ET COMPRIMÉ DES AMORTISSEURS

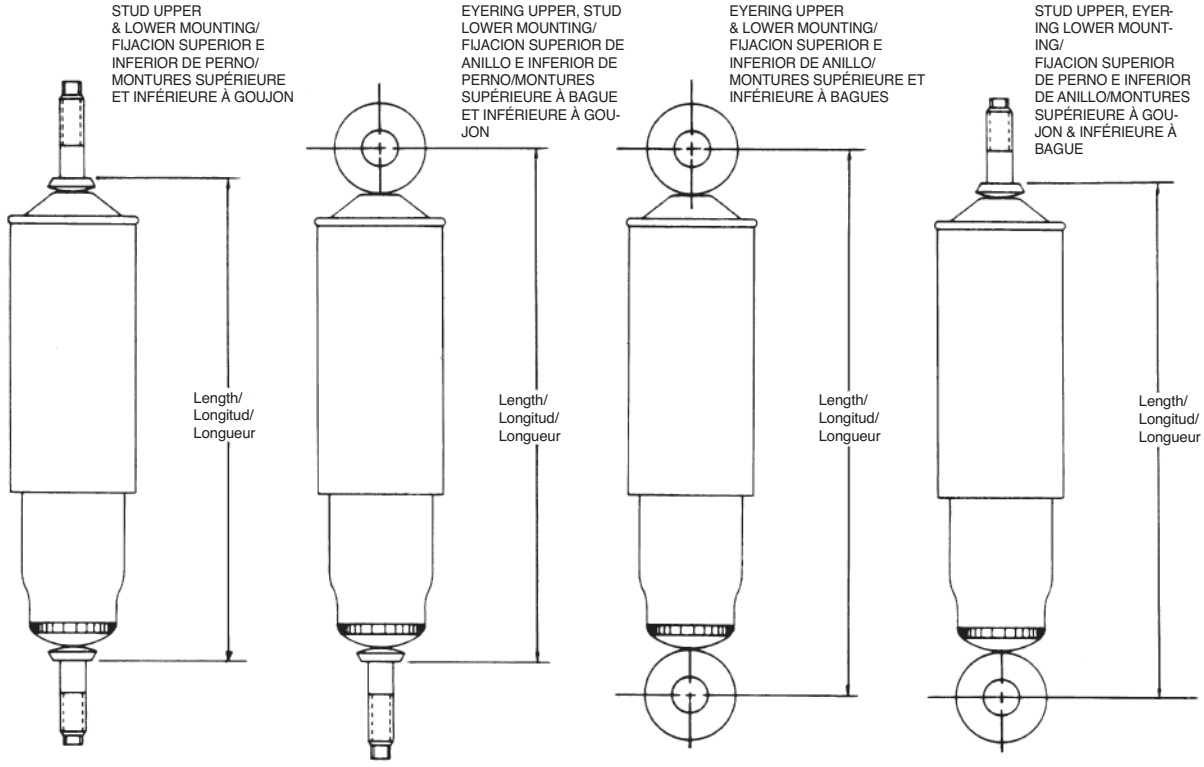

INSTRUCTIONS:

1. Using the proper measuring points as shown above find the nearest replacement shock absorber from the listing by increments of extended length.
2. Identify the proper mounting from the mounting codes and match these requirements by carefully measuring the mounting dimensions (top and bottom) of the shock absorber to be replaced.
3. Carefully take note of the following requirements:
   a. **Dust tubes** - This requirement should be noted in comparison with the shock absorber to be replaced. Shock absorber environment in its application makes this requirement necessary for piston rod protection and extended shock absorber life.
   b. **Recoil Cutoff and Compression Bumper** - Carefully note these specifications - deviation of length requirements should not exceed ± ¼". These shock absorber designs are footnoted for easy identification.

Note: Shock Absorbers used for installations other than those recommended in our catalog are **not subject to warranty.**

INSTRUCCIONES :

1. Usando los puntos de medida adecuados como mencionado, encuentre el amortiguador más cercano en la lista por incrementos de la longitud extendida.
2. Identifique la fijación adecuada por medio de los códigos de fijación y compare estas especificaciones, midiendo cuidadosamente las dimensiones de la fijación (superior e inferior) del amortiguador por reemplazar.
3. Note cuidadosamente las exigencias siguientes :
   a. **Guarda polvo** : esta exigencia debe notarse en comparación con el amortiguador por reemplazar. Esta exigencia es necesaria en cuanto a los amortiguadores para proteger al vástago del pistón y extender la duración del amortiguador.
   b. **Tope de retorno y tope de compresión**. Note cuidadosamente las especificaciones siguientes : las exigencias de longitud no deben de ser excedidas ± ¼". Estos diseños de amortiguadores están marcados para facilitar su identificación.

Nota : Los amortiguadores usados para instalaciones otras que las recomendadas en nuestro catálogo **no son garantizados.**

INSTRUCTIONS:

1. En utilisant les points de mesure appropriés comme indiqués ci-dessus, trouvez l'amortisseur de rechange le plus près de cette mesure d'après la longueur allongée.
2. Repérez les montures appropriées sur les codes des montures et faites correspondre ces exigences en mesurant attentivement les dimensions des montures (haut et bas) de l'amortisseur à replacer.
3. Avec soin, prenez note des exigences suivantes:
   a. **Tubes pare-poussière** - Cette exigence devrait être notée en comparaison de l'amortisseur à remplacer. Le milieu de service rend cette exigence nécessaire pour la protection de la tige de piston et une meilleure longévité de l'amortisseur.
   b. **Arrêt de retour et butée de compression** - Notez avec soin ces spécifications. La déviation par rapport aux exigences de longueurs ne doit pas dépasser ± ¼ po. Ces modèles d'amortisseurs portent une note pour une identification facile.

Note: Les amortisseurs utilisés pour des installations autres que celles recommandées dans notre catalogue **ne sont pas couverts par la garantie.**

STEP 3: Measure end mount diameters, widths, and lengths. Refer to the following Endmount tables to determine the appropriate or matching mounting code

3ER PASO Mida las dimensiones del tubo, así como el diámetro, la anchura y la longitud de las fijaciones. Consulte las tablas siguientes de conteras para determinar el código de montaje apropiado o concorde

3E ÉTAPE Mesurez le diamètre, la largeur et la longueur des bagues. Consultez les tableaux d'embouts suivants afin d'établir le code de montage approprié ou concordant

MOUNTING CODE "EB" EYERING AND BUSHING
CODIGO DE FIJACION «EB» - ANILLO Y BUJE CODE DE MONTURE «EB» À BAGUE ET MANCHON

EB1

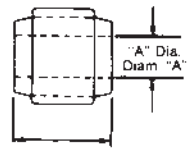

FREE LENGTH "B"
COMP LENGTH "C"
LONGITUD LIBRE "B"
LONGITUD COMPRIMIDA "C"
LONGUEUR NON COMP "B"
LONGUEUR COMP "C"

EB2

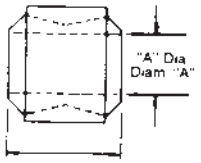

FREE LENGTH "B"
COMP LENGTH "C"
LONGITUD LIBRE "B"
LONGITUD COMPRIMIDA "C"
LONGUEUR NON COMP "B"
LONGUEUR COMP "C"

EB3

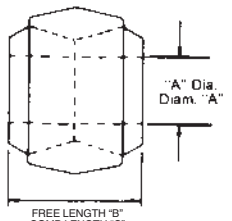

FREE LENGTH "B"
COMP LENGTH "C"
LONGITUD LIBRE "B"
LONGITUD COMPRIMIDA "C"
LONGUEUR NON COMP "B"
LONGUEUR COMP "C"

EB4

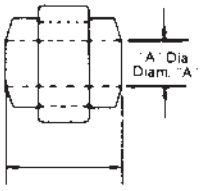

FREE LENGTH "B"
COMP LENGTH "C"
LONGITUD LIBRE "B"
LONGITUD COMPRIMIDA "C"
LONGUEUR NON COMP "B"
LONGUEUR COMP "C"

EB6

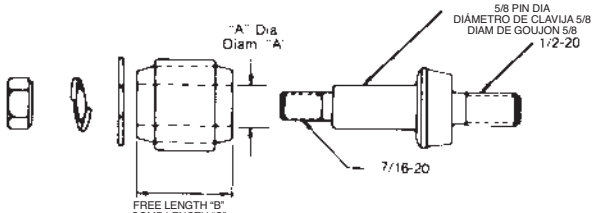

FREE LENGTH "B"
COMP LENGTH "C"
LONGITUD LIBRE "B"
LONGITUD COMPRIMIDA "C"
LONGUEUR NON COMP "B"
LONGUEUR COMP "C"

EB5

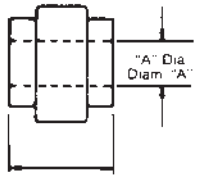

FREE LENGTH "B"
COMP LENGTH "C"
LONGITUD LIBRE "B"
LONGITUD COMPRIMIDA "C"
LONGUEUR NON COMP "B"
LONGUEUR COMP "C"

EB7

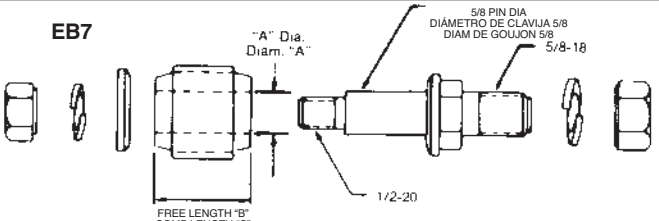

FREE LENGTH "B"
COMP LENGTH "C"
LONGITUD LIBRE "B"
LONGITUD COMPRIMIDA "C"
LONGUEUR NON COMP "B"
LONGUEUR COMP "C"

EB8

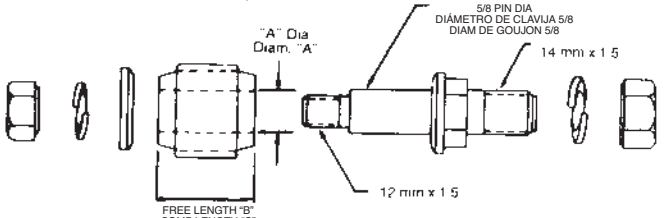

FREE LENGTH "B"
COMP LENGTH "C"
LONGITUD LIBRE "B"
LONGITUD COMPRIMIDA "C"
LONGUEUR NON COMP "B"
LONGUEUR COMP "C"

Mounting Code Código de fijación Code de monture	"A" Dia. Diámetro "A" Diam. "A"	B Free Length Longitud libre Long. non comp.	C Comp. Length Longitud comprimida Long. comp.	Vehicle Mounting Pin Dia. Diámetro de clavija de fijación del vehículo Diam. du goujon de montage du véhicule
EB1	5/8	1.44	1.31/1.25	5/8
EB2	3/4	1.75	1.50	3/4
EB3	1	1.91	1.75	1
EB4	11/16	1.72	1.55	11/16
EB5	5/8	1.51	1.25	5/8
EB6	5/8	1.44	1.31/1.25	Mounting pin furnished with shock absorber for 1/2" dia. vehicle mounting hole. Clavija de fijación provista con amortiguador para agujero de montaje de 1/2" de diámetro en el vehículo. Goujon de montage fourni avec l'amortisseur pour trou de montage de 1/2 po de diam. sur véhicule.
EB7	5/8	1.44	1.31/1.25	Mounting pin furnished with shock absorber for 5/8" dia. vehicle mounting hole. Clavija de fijación provista con amortiguador para agujero de montaje de 5/8" de diámetro en el vehículo. Goujon de montage fourni avec l'amortisseur pour trou de montage de 5/8 po de diam. sur véhicule.
EB8	5/8	1.44	1.31/1.25	Mounting pin furnished with shock absorber for 14 mm dia. vehicle mounting hole. Clavija de fijación provista con amortiguador para agujero de montaje de 14 mm de diámetro en el vehículo. Goujon de montage fourni avec l'amortisseur pour trou de montage de 14 mm de diam. sur véhicule.

MOUNTING CODE “BP” EYERING AND BUSHING WITH BAR PIN
CODIGO DE FIJACION «BP» ANILLO Y BUJE CON CLAVIJA TIPO BARRA
CODE DE MONTURE “BP” BAGUE ET MANCHON AVEC GOUPILLE

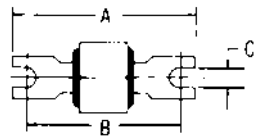

Type 1/Tipo 1

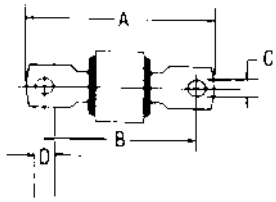

Type 2 /Tipo 2

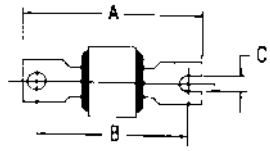

Type 3 /Tipo 3

Code	Type	A	B	C	D	Code	Type	A	B	C	D
BP1	1	2.72	2.20	0.33	---	BP16	2	3.70	2.91	0.35	0.44
BP3	1	2.82	2.38	0.33	---	BP17	1	3.11	2.61	0.33	---
BP4	1	3.19	2.38	0.33	---	BP18	1	3.75	3.14	0.39	---
BP5	1	3.19	2.75	0.33	---	BP19	1	3.19	2.62	0.33	---
BP6	1	4.25	3.62	0.33	---	BP20	1	3.59	3.12	0.33	---
BP7	2	3.13	2.50	0.35	0.42	BP26	3	3.06	2.37	0.26	---
BP8	2	3.50	2.87	0.35	0.42	BP27	2	4.00	2.95	0.52	---
BP11	1	2.96	2.52	0.33	---	BP30	1	3.00	2.25	0.34	---
BP12	1	3.75	3.14	0.33	---	BP31	3	3.50	2.87	0.35	---
BP13	1	3.45	3.00	0.33	---	BP32	2	3.45	2.83	0.42	---
BP14	2	3.43	2.87	0.43	---	BP33	2	3.50	2.87	0.35	0.42

MOUNTING CODE “ES” & “CB” EYERING AND BUSHING WITH STEEL SLEEVE
CODIGO DE FIJACION «ES» Y «CB» ANILLO Y BUJE CON CAMISA DE ACERO
CODE DE MONTURE “ES” & “CB” BAGUE ET MANCHON AVEC COLLET EN ACIER

TYPE 1/TIPO 1 CENTERED IN EYERING
CENTRADO EN EL ANILLO
CENTRÉ DANS LA BAGUE

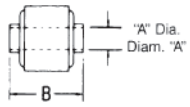

TYPE 2/TIPO 2 OFFSET IN EYERING
DESCENTRADO EN EL ANILLO
DÉCALÉ SUR LA BAGUE

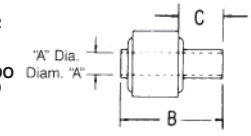

TYPE 3/TIPO 3 CAPTURED BUSHING
BUJE CAPTURADO
MANCHON PRISONNIER

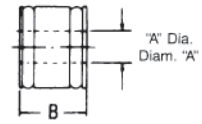

,5 23	.873	9&A- 40!	’	,
ES160	1	1.00	2.01	---
ES22	1	½	1.25	---
ES23	1	½	1.31	---
ES24	1	½	1.38	---
ES25	1	½	1.48	---
ES26	1	½	1.56	---
ES27	1	½	1.62	---
ES31	2	½	2.25	1.00
ES32	1	½	3.34	---
ES45	1	½	1.53	---
ES82	1	½	1.67	---
ES91	1	½	2.00	---
ES94	1	½	2.10	---
ES126	1	½	2.44	---
ES128	1	½	1.66	---
ES130	1	½	1.56	---
ES149	1	½	2.36	---
ES151	1	½	2.44	---
ES157	2	½	2.05	0.95
ES164	1	½	2.26	---
ES165	1	½	1.75	---
ES171	1	½	1.88	---
ES172	1	½	2.72	---
ES36	1	¾	1.75	---
ES120	1	¾	2.76	---
ES121	1	¾	2.06	---
ES150	1	¾	2.24	---
ES158	1	¾	3.80	---
ES159	2	¾	3.21	1.03
ES178	1	¾	1.96	---
ES35	1	⅝	1.38	---
ES90	1	⅝	2.00	---
ES136	1	⅝	1.75	---
ES161	1	⅝	3.95	---
,52 3	.873	9&A -40!	’	,
ES162	1	⅝	2.60	---
ES166	1	⅝	2.97	---
ES174	1	⅝	3.25	---
ES8	1	7⁄16	1.25	---
ES9	1	7⁄16	1.31	---
ES10	1	7⁄16	1.38	---
ES11	1	7⁄16	1.50	---
ES12	1	7⁄16	1.62	---
ES14	1	7⁄16	1.88	---
ES16	1	7⁄16	3.15	---
ES38	1	7⁄16	2.16	---
ES40	1	7⁄16	3.38	---
ES145	1	7⁄16	2.25	---
ES163	1	7⁄16	2.50	---
ES173	1	⅞	2.28	---
ES34	1	9⁄16	1.66	---
ES87	1	9⁄16	1.62	---
ES143	1	9⁄16	1.60	---
CB6	3	10 mm	1.59	---
ES1	1	10 mm	1.25	---
ES2	1	10 mm	1.42	---
ES3	1	10 mm	1.56	---
ES4	1	10 mm	1.97	---
ES5	1	10 mm	2.07	---
ES6	1	10 mm	2.36	---
ES39	1	10 mm	1.31	---
ES44	1	10 mm	2.28	---
ES53	1	10 mm	1.38	---
ES84	1	10 mm	1.62	---
ES106	1	10 mm	1.48	---
ES109	1	10 mm	0.95	---
ES115	1	10 mm	2.02	---
ES116	1	10 mm	1.24	---
ES170	1	10 mm	1.18	---
,5 23	.873	9&A -40!	’	,
ES17	1	12 mm	1.25	---
ES18	1	12 mm	1.65	---
ES19	1	12 mm	1.88	---
ES20	1	12 mm	1.95	---
ES21	1	12 mm	2.28	---
ES37	1	12 mm	1.01	---
ES46	2	12 mm	1.88	0.62
ES54	1	12 mm	2.91	---
ES55	1	12 mm	1.56	---
ES61	1	12 mm	1.76	---
ES69	1	12 mm	1.58	---
ES83	1	12 mm	1.48	---
ES85	1	12 mm	2.36	---
ES107	1	12 mm	2.15	---
ES112	1	12 mm	1.08	---
ES114	1	12 mm	2.04	---
ES133	1	12 mm	1.93	---
ES141	1	12 mm	1.61	---
ES56	1	14 mm	1.38	---
ES60	1	14 mm	1.26	---
ES64	1	14 mm	1.19	---
ES86	1	14 mm	2.44	---
ES153	1	14 mm	1.55	---
ES167	1	14 mm	2.31	---
ES168	1	14 mm	2.62	---
ES169	1	14 mm	1.91	---
ES110	1	16 mm	1.61	---
ES113	1	16 mm	1.49	---
ES175	1	16 mm	1.96	---
ES176	1	16 mm	3.72	---
ES177	1	16 mm	3.55	---
ES104	1	20 mm	1.58	---
ES152	1	20 mm	1.69	---

,52 3	.873	9&A-40!	’	,
CB6	3	10 mm	1.59	---
ES1	1	10 mm	1.25	---
ES2	1	10 mm	1.42	---
ES3	1	10 mm	1.56	---
ES4	1	10 mm	1.97	---
ES5	1	10 mm	2.07	---
ES6	1	10 mm	2.36	---
ES8	1	7⁄16	1.25	---
ES9	1	7⁄16	1.31	---
ES10	1	7⁄16	1.38	---
ES11	1	7⁄16	1.50	---
ES12	1	7⁄16	1.62	---
ES14	1	7⁄16	1.88	---
ES16	1	7⁄16	3.15	---
ES17	1	12 mm	1.25	---
ES18	1	12 mm	1.65	---
ES19	1	12 mm	1.88	---
ES20	1	12 mm	1.95	---
ES21	1	12 mm	2.28	---
ES22	1	½	1.25	---
ES23	1	½	1.31	---
ES24	1	½	1.38	---
ES25	1	½	1.48	---
ES26	1	½	1.56	---
ES27	1	½	1.62	---
ES31	2	½	2.25	1.00
ES32	1	½	3.34	---
ES34	1	9⁄16	1.66	---
ES35	1	⅝	1.38	---
ES36	1	¾	1.75	---
ES37	1	12 mm	1.01	---
ES38	1	7⁄16	2.16	---
ES39	1	10 mm	1.31	---
ES40	1	7⁄16	3.38	---
,5 23	.873	9&A -40!	’	,
ES44	1	10 mm	2.28	---
ES45	1	½	1.53	---
ES46	2	12 mm	1.88	0.62
ES53	1	10 mm	1.38	---
ES54	1	12 mm	2.91	---
ES55	1	12 mm	1.56	---
ES56	1	14 mm	1.38	---
ES60	1	14 mm	1.26	---
ES61	1	12 mm	1.76	---
ES64	1	14 mm	1.19	---
ES69	1	12 mm	1.58	---
ES82	1	½	1.67	---
ES83	1	12 mm	1.48	---
ES84	1	10 mm	1.62	---
ES85	1	12 mm	2.36	---
ES86		114 mm	2.44	---
ES87	1	9⁄16	1.62	---
ES90	1	⅝	2.00	---
ES91	1	½	2.00	---
ES94	1	½	2.10	---
ES104	1	20 mm	1.58	---
ES106	1	10 mm	1.48	---
ES107	1	12 mm	2.15	---
ES109	1	10 mm	0.95	---
ES110	1	16 mm	1.61	---
ES112	1	12 mm	1.08	---
ES113	1	16 mm	1.49	---
ES114	1	12 mm	2.04	---
ES115	1	10 mm	2.02	---
ES116	1	10 mm	1.24	---
ES120	1	¾	2.76	---
ES121	1	¾	2.06	---
ES126	1	½	2.44	---
ES128	1	½	1.66	--
, 523	.873	9&A - 40!	’	,
ES130	1	½	1.56	---
ES133	1	12 mm	1.93	---
ES136	1	⅝	1.75	---
ES141	1	12 mm	1.61	---
ES143	1	9⁄16	1.60	---
ES145	1	7⁄16	2.25	---
ES149	1	½	2.36	---
ES150	1	¾	2.24	---
ES151	1	½	2.44	---
ES152	1	20 mm	1.69	---
ES153	1	14 mm	1.55	---
ES157	2	½	2.05	0.95
ES158	1	¾	3.80	---
ES159	2	¾	3.21	1.03
ES160	1	1.00	2.01	---
ES161	1	⅝	3.95	---
ES162	1	⅝	2.60	---
ES163	1	7⁄16	2.50	---
ES164	1	½	2.26	---
ES165	1	½	1.75	---
ES166	1	⅝	2.97	---
ES167	1	14 mm	2.31	---
ES168	1	14 mm	2.62	---
ES169	1	14 mm	1.91	---
ES170	1	10 mm	1.18	---
ES171	1	½	1.88	---
ES172	1	½	2.72	---
ES173	1	⅞	2.28	---
ES174	1	⅝	3.25	---
ES175	1	16 mm	1.96	---
ES176	1	16 mm	3.72	---
ES177	1	16 mm	3.55	---
ES178	1	¾	1.96	---

MOUNTING CODES “S” & “DS” STUD MOUNTS
CODIGOS DE FIJACION «S» Y «DS» FIJACIONES DE DOBLE PERNO
CODES DE MONTURE “S” & “DS” À GOUJON

S

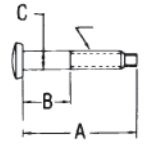

D (Thread Size)
D (Tamaño de filete)
D (Filet)

DS

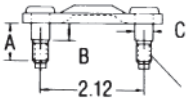

D (Thread Size)
D (Tamaño de filete)
D (Filet)

Code	A	B	C	D	Code	A	B	C	D	Code	A	B	C	D
DS1	1.25	0.44	3/8	5/16 - 24	S13	2.06	1.35	3/8	3/8 - 24	S33	3.44	2.17	10 mm	10 mm
S1	2.37	1.00	3/8	3/8 - 24	S14	2.25	1.33	7/16	3/8 - 24	S36	1.24	0.65	3/8	3/8 - 24
S2	2.06	1.00	3/8	3/8 - 24	S16	2.95	1.45	16 mm	16 x 1.5	S38	2.75	1.70	14 mm	12 mm
S4	1.75	1.00	3/8	3/8 - 24	S17	2.15	1.03	7/16	3/8 - 24	S39	3.55	1.75	5/8	5/8 - 18
S6	2.58	1.47	7/16	3/8 - 24	S21	3.28	1.75	5/8	5/8 - 18	S40	2.52	1.33	7/16	3/8 - 24
S7	1.97	1.00	3/8	3/8 - 24	S23	1.84	1.05	3/8	3/8 - 24	S41	3.48	2.32	5/8	1/2 - 20
S10	2.37	1.33	7/16	3/8 - 24	S28	2.34	1.33	7/16	3/8 - 16	S42	3.50	2.00	5/8	5/8 - 18
S11	2.37	1.21	7/16	3/8 - 24	S29	2.99	1.87	3/8	3/8 - 24	S43	2.75	1.25	5/8	5/8 - 18
S12	2.37	1.15	7/16	3/8 - 24	S30	3.44	1.30	7/16	10 mm					

EXPLANATION OF COLUMN HEADINGS
EXPLICACION DE LOS TITULOS DE LAS COLUMNA
EXPLICATION DES EN-TÊTES DE COLONNES

SHOCK ABSORBER PART NUMBER:
The catalog number for the individual shock absorber.

EXTENDED LENGTH:*
The length of the shock absorber when it is fully extended. See “How to Measure” instructions.

COLLAPSED LENGTH:*
The length of the shock absorber when it is fully compressed.
See “How to Measure” instructions.

STROKE:
This is the approximate length of the stroke of the individual shock absorber being described.

MOUNTING CODES:
Indicates the type of mounting ends for the upper and lower end of each shock absorber.
They are listed as follows:
Stud Type Mounts (“S” & “DS”)
Eye Ring and Bushing Mounts (“EB”)
Eye Ring and Bushing with Sleeve Mounts (“ES”)
Eye Ring and Bushing with Bar Pin Mounts (“BP”)
Special Mounting Codes (“SP”)

DUST TUBE:
Indicates whether the shock absorber is supplied with a dust tube.

MOUNTING ACCESSORY PACKAGE NUMBER:
The part number of the Mount Accessory Package supplied with the shock absorber.

***NOTE:**
All dimensions shown are in inches

Número de parte del amortiguador :
El número de catálogo para el amortiguador individual

Longitud extendida :
La longitud del amortiguador cuando es totalmente extendido. Ver instrucciones «Cómo medir»

Longitud comprimida :
La longitud del amortiguador cuando es totalmente comprimido. Ver instrucciones «Cómo medir»

Carrera :
Es la longitud aproximada de la carrera del amortiguador descrito

Códigos de fijación :
Indica el tipo de montantes de fijación superior e inferior para cada amortiguador.
Se listan como sigue :
Fijaciones de tipo perno («S» y «DS»)
Fijaciones de anillo y buje («EB»)
Fijaciones de anillo y buje con camisa («ES»)
Fijaciones de anillo y buje con clavija («BP»)
Códigos de fijación especiales («SP»)

Tubo de polvo :
Indica si el amortiguador está provisto con un tubo de polvo.

Número de paquete de accesorios de fijación :
El número de parte del paquete de accesorios de fijación provisto con el amortiguador

***NOTA :**
Todas las dimensiones son en pulgadas

Numéro de pièce de l’amortisseur:
Le numéro de catalogue pour l’amortisseur individuel.

Longueur étirée:*
La longueur de l’amortisseur entièrement étiré. Voir “Comment mesurer”.

Longueur comprimée:*
La longueur de l’amortisseur entièrement comprimé. Voir “Comment mesurer”.

Course:
C’est la longueur approximative de la course de l’amortisseur individuel décrit.

Codes de monture:
Indique le type de montures supérieure et inférieure de chaque amortisseur.
Ils sont énumérés comme suit:
Montures de type goujon (“S” & “DS”)
Montures à bague et manchon (“EB”)
Montures à bague et manchon avec collet (“ES”)
Montures à bague et manchon avec goupille (“BP”)
Codes de montures spéciales (“SP”)

Tube pare-poussière:
Indique que l’amortisseur est fourni avec un tube pare-poussière.

Numéro d’emballage d’accessoires de montage:
Le numéro de pièce de l’emballage d’accessoires de montage fourni avec l’amortisseur.

***NOTE:**
Toutes les dimensions indiquées sont en pouces

STEP 4:

Refer to shock absorber specifications by end mount. Start first by finding the appropriate series. Next, match the extended/collapsed length and find the correct mounting codes. Refer to the far left column of the chart for the correct Gabriel Shock Absorber part number.

4º PASO

Consulte las especificaciones del amortiguador mostradas al final del catálogo. Encuentre primero la serie adecuada. Luego, compare las longitudes de extensión y de compresión, y encuentre los códigos de fijación correctos. Consulte la columna del extremo izquierdo de la tabla para identificar el número de parte del amortiguador Gabriel correcto.

4E ÉTAPE

Reportez-vous aux spécifications d’amortisseur énoncées à la fin du catalogue. Trouvez d’abord la série appropriée. Comparez ensuite les longueurs d’extension et de compression et trouvez les bons codes de fixation. Reportez-vous à la colonne située à la extrême gauche du tableau pour identifier le bon numéro de pièce pour un amortisseur Gabriel.

SPECIFICATIONS BY END MOUNT
ESPECIFICACIONES POR NÚMERO DE PIEZA
SPÉCIFICATIONS PAR NUMÉRO DE PIÈCE

Gabriel	Mounting Upper	Mounting Lower	Bore	External Diameter Illustration	Lengths Extended	Lengths Collapsed	Stroke	Dust Tube	Recoil Cutoff	Controls * Rebound	Controls * Compression
630811			1-3/16"		22.45	14.10	8.35	NO	NO		
632147			1-3/16"		22.45	14.10	8.35	NO	NO		
G60353			1-3/8"		17.73	11.12	6.61	YES	NO		
G61150		ES83	1-3/8"		22.98	14.20	8.78	YES	NO		
G60110	BP1	ES130	1-3/8"		25.48	15.20	10.28	YES	NO		
G60083	BP1	ES27	1-3/8"		23.16	14.13	9.03	YES	NO		
G60265	BP18	ES24	1-3/8"		19.51	12.23	7.28	YES	NO		
G60053	BP2	EB1	1-3/8"		19.98	12.45	7.53	YES	NO		
83041	BP27	S10	1-3/8"	A	10.51†	8.34†	3.02	YES	YES	486	189
G60161	BP33	ES83	1-3/8"		25.48	15.20	10.28	YES	NO		
83013	BP8	BP8	1-3/16"	2" D/T	7.66	6.63†	1.70	YES	NO	646	480
G60097	BP8	ES34	1-3/8"		26.76	16.23	10.53	YES	YES		
G60050	BP8	ES34	1-3/8"		23.98	14.45	9.53	YES	NO		
G60196	BP8	ES34	1-3/8"		23.98	14.45	9.53	YES	NO		
G60222	BP8	ES83	1-3/8"		24.98	14.95	10.03	YES	NO		
83015	BP8	S1	1-3/8"	A	9.79	7.55	2.24	YES	YES	735	430
83005	BP8	S10	1-3/16"	2" D/T	7.34	5.87	1.47	YES	NO	858	216
G60235	EB1	EB1	1-3/8"		27.48	16.20	11.28	YES	NO		
G60067	EB1	EB1	1-3/8"		25.97	15.35	10.62	NO	NO		
G60204	EB1	EB1	1-3/8"		24.98	14.95	10.03	YES	NO		
83401	EB1	EB1	1-3/16"	F	24.09	14.26	9.83	YES	NO	341	252
G60075	EB1	EB1	1-3/8"		23.98	14.45	9.53	YES	NO		
G60069	EB1	EB1	1-3/8"		22.97	13.85	9.12	NO	NO		
G60329	EB1	EB1	1-3/8"		22.73	13.87	8.86	YES	YES		
G60101	EB1	EB1	1-3/8"		22.48	13.70	8.78	YES	NO		
G60096	EB1	EB1	1-3/8"		21.69	13.47	8.22	YES	NO		
G60308	EB1	EB1	1-3/8"		20.23	12.37	7.86	YES	NO		
G60031	EB1	EB1	1-3/8"		19.98	12.45	7.53	YES	NO		
G60232	EB1	EB1	1-3/8"		18.98	11.95	7.03	YES	NO		
83007	EB1	EB1	1-3/8"	A	18.54	11.67	6.87	NO	NO	489	343
G60003	EB1	EB1	1-3/8"		17.98	11.45	6.53	YES	NO		
83011	EB1	EB1	1-3/8"	A	11.55†	8.43	3.62	YES	YES	738	330
83012	EB1	EB1	1-3/8"	A	11.05†	8.18	3.37	YES	YES	738	330
G60048	EB1	ES106	1-3/8"		26.98	15.95	11.03	NO	NO		
G60063	EB1	ES106	1-3/8"		22.98	13.95	9.03	YES	NO		
G60152	EB1	ES142	1-3/8"		19.64	12.36	7.28	YES	NO		
G60113	EB1	ES24	1-3/8"		15.98	10.45	5.53	YES	NO		
G60068	EB1	ES25	1-3/8"		25.97	15.35	10.62	NO	NO		
G60007	EB1	ES25	1-3/8"		22.98	13.95	9.03	YES	NO		
G60042	EB1	ES25	1-3/8"		19.98	12.45	7.53	YES	NO		
G60099	EB1	ES25	1-3/8"		18.98	11.95	7.03	YES	NO		
G60065	EB1	ES34	1-3/8"		29.85	17.47	12.38	NO	NO		
G61151	EB1	ES83	1-3/8"		31.51	18.48	13.03	YES	NO		
G60066	EB1	ES83	1-3/8"		29.72	17.23	12.49	NO	NO		
G61149	EB1	ES83	1-3/8"		28.76	16.98	11.78	YES	NO		
G60143	EB1	ES83	1-3/8"		26.98	15.95	11.03	YES	NO		
G61115	EB1	ES83	1-3/8"		26.98	15.95	11.03	YES	NO		
G60081	EB1	ES83	1-3/8"		26.76	15.98	10.78	YES	NO		
G61152	EB1	ES83	1-3/8"		25.48	15.20	11.78	YES	NO		
G60084	EB1	ES83	1-3/8"		25.48	15.20	10.28	YES	NO		
G60144	EB1	ES83	1-3/8"		22.98	13.95	9.03	YES	NO		
G61113	EB1	ES83	1-3/8"		22.98	13.95	9.03	YES	NO		

* Damping force, in pounds, to either extend or collapse the shock absorber at an average operating velocity.
Fuerza de amortiguación en libras para extender o comprimir el amortiguador a una velocidad de operación promedio.
La puissance d'amortissement en poids de l'amortisseur, soit comprimé, doit détendu, à une vitesse de fonctionnement moyenne.

† At bumper contact / Al contacto cone el tope de goma. / Au contact avec le butoir.

SPECIFICATIONS BY END MOUNT
ESPECIFICACIONES POR FIJACIÓN DE EXTREMIDADES
SPÉCIFICATIONS PAR FIXATION DES EXTRÉMITÉS

Gabriel	Mounting Upper	Mounting Lower	Bore	External Diameter Illustration	Lengths Extended	Lengths Collapsed	Stroke	Dust Tube	Recoil Cutoff	Controls * Rebound	Controls * Compression
G60035	EB1	ES83	1-3/8"		21.48	13.20	8.28	YES	NO		
G60100	EB1	S1	1-3/8"		18.95	11.67	7.28	YES	NO		
G60180	EB1	S7	1-3/8"		19.20	11.92	7.28	YES	YES		
85063	EB2	EB2	1-5/8"	C	32.01	18.85	13.16	YES	NO	762	174
83107	EB2	EB2	1-3/8"	A	31.60	18.36	13.24	YES	NO	352	77
83314	EB2	EB2	1-3/8"	B	30.64	18.11	12.53	YES	YES	633	143
85024	EB2	EB2	1-5/8"	C	28.74	17.21	11.53	YES	YES	1008	539
83309	EB2	EB2	1-3/8"	B	28.64	17.11	11.53	YES	YES	589	135
89416	EB2	EB2	1-5/8"	G	28.62	17.54	11.08	YES	YES	1155‡	514‡
89401	EB2	EB2	1-5/8"	G	28.41	17.16	11.25	YES	NO	665‡	194‡
89446	EB2	EB2	1-5/8"	G	28.36	17.41	10.95	YES	YES	702‡	204‡
85046	EB2	EB2	1-5/8"	C	27.51	16.60	10.91	YES	YES	1008	539
89434	EB2	EB2	1-5/8"	G	27.12	16.79	10.33	YES	YES	1155‡	514‡
89403	EB2	EB2	1-5/8"	G	26.86	17.16	9.70	YES	YES	929‡	281‡
83312	EB2	EB2	1-3/8"	B	26.64	16.11	10.53	YES	YES	527	152
89409	EB2	EB2	1-5/8"	G	26.36	16.41	9.95	YES	YES	567‡	165‡
89439	EB2	EB2	1-5/8"	G	25.67	15.79	9.88	YES	NO	518‡	103‡
85055	EB2	EB2	1-5/8"	C	25.63	15.60	10.03	YES	NO	577	102
85047	EB2	EB2	1-5/8"	C	25.25	15.47	9.78	YES	YES	1008	539
83308	EB2	EB2	1-3/8"	B	25.14	15.36	9.78	YES	YES	445	180
89435	EB2	EB2	1-5/8"	G	24.86	15.66	9.20	YES	YES	1155‡	514‡
83200	EB2	EB2	1-3/8"	A	24.51	14.98	9.53	YES	NO	806	370
89402	EB2	EB2	1-5/8"	G	24.41	15.16	9.25	YES	NO	874‡	206‡
83216	EB2	EB2	1-3/8"	A	23.51	14.48	9.03	YES	NO	776	262
85054	EB2	EB2	1-5/8"	C	23.26	14.35	8.91	YES	NO	602	104
89438	EB2	EB2	1-5/8"	G	23.17	14.54	8.63	YES	NO	583‡	103‡
G60103	EB2	EB2	1-3/8"		21.29	13.26	8.03	YES	NO		
G60128	EB2	EB2	1-3/8"		21.11	13.24	7.87	YES	NO		
85012	EB2	EB2	1-5/8"	C	21.00	13..22	7.78	YES	NO	523	199
89413	EB2	EB2	1-5/8"	G	20.91	13.41	7.50	YES	NO	536‡	201‡
85023	EB2	EB2	1-5/8"	C	20.24	12.96	7.28	YES	YES	1008	539
89415	EB2	EB2	1-5/8"	G	20.12	13.29	6.83	YES	YES	1155‡	514‡
83219	EB2	EB2	1-3/8"	A	20.01	12.73	7.28	YES	NO	299	125
85062	EB2	EB2	1-5/8"	C	19.76	12.60	7.20	YES	NO	523	199
89408	EB2	EB2	1-5/8"	G	19.67	12.79	6.88	YES	NO	536‡	201‡
G60119	EB2	ES27	1-3/8"		24.14	14.61	9.53	YES	NO		
85025	EB2	S21	1-5/8"	C	23.00	13.97	9.03	YES	NO	1079	539
G60088	EB2	S32	1-3/8"		22.68	13.90	8.78	YES	NO		
85376	EB3	EB3	1-5/8"	D	33.25	19.72	13.53	YES	NO	668	134
85301	EB3	EB3	1-5/8"	D	31.92	19.03	12.89	YES	NO	1442	455
85040	EB3	EB3	1-5/8"	C	30.90	18.49	12.41	YES	NO	889	114
85730	EB3	EB3	1-5/8"	D	30.75	18.72	12.03	YES	YES	1517	293
85315	EB3	EB3	1-5/8"	D	29.66	18.15	11.51	YES	NO	380	142
85901	EB3	EB3	1-5/8"	G	29.05	17.64	11.41	YES	NO	1830	418
85704	EB3	EB3	1-5/8"	D	28.75	18.72	10.03	YES	YES	1435	186
83104	EB3	EB3	1-3/8"	A	28.24	17.12	11.12	YES	NO	698	133
85305	EB3	EB3	1-5/8"	D	27.25	16.72	10.53	YES	NO	1120	225
83362	EB3	EB3	1-3/8"	B	27.00	16.25	10.75	YES	NO	539	202
87004	EB3	EB3	2-1/16"	E	26.76	16.76	10.00	YES	YES	1158	190
85735	EB3	EB3	1-5/8"	D	26.74	16.71	10.03	YES	YES	1288	227
83215	EB3	EB3	1-3/8"	A	26.64	16.36	10.28	YES	NO	661	125
89425	EB3	EB3	1-5/8"	G	26.50	16.80	9.70	YES	YES	1352‡	167‡

* Damping force, in pounds, to either extend or collapse the shock absorber at an average operating velocity.
Fuerza de amortiguación en libras para extender o comprimir el amortiguador a una velocidad de operación promedio.
La puissance d'amortissement en poids de l'amortisseur, soit comprimé, doit détendu, à une vitesse de fonctionnement moyenne.

‡ For GasSLX Series, forces are at the "Firm" (F) setting. / Para la serie Gas SLX, fas fuerzas estan adjustada en (F) "Firme". / Pour la série GasSLX, le réglage de la force est sur « Ferme » (F).

SPECIFICATIONS BY END MOUNT
ESPECIFICACIONES POR NÚMERO DE PIEZA
SPÉCIFICATIONS PAR NUMÉRO DE PIÈCE

Gabriel	Mounting Upper	Mounting Lower	Bore	External Diameter Illustration	Lengths Extended	Lengths Collapsed	Stroke	Dust Tube	Recoil Cutoff	Controls * Rebound	Controls * Compression
85314	EB3	EB3	1-5/8”	D	26.50	16.47	10.03	YES	YES	1216	169
89410	EB3	EB3	1-5/8”	G	26.33	16.42	9.91	YES	NO	1185‡	182‡
85001	EB3	EB3	1-5/8”	C	26.27	16.36	9.91	YES	NO	1202	186
87003	EB3	EB3	2-1/16”	E	26.26	16.51	9.75	YES	YES	1332	395
85313	EB3	EB3	1-5/8”	D	26.26	16.35	9.91	YES	YES	717	111
89429	EB3	EB3	1-5/8”	G	26.18	16.43	9.75	YES	NO	553‡	266‡
85700	EB3	EB3	1-5/8”	D	26.13	16.60	9.53	YES	YES	1446	328
85320	EB3	EB3	1-5/8”	D	26.13	16.35	9.78	YES	NO	970	308
83140	EB3	EB3	1-3/8”	A	25.27	15.52	9.75	YES	NO	738	88
83141	EB3	EB3	1-3/8”	A	25.27	15.52	9.75	YES	NO	408	113
83132	EB3	EB3	1-3/8”	A	25.24	15.50	9.74	YES	NO	828	150
89422	EB3	EB3	1-5/8”	G	25.13	16.18	8.95	YES	YES	794‡	253‡
85308	EB3	EB3	1-5/8”	D	25.13	15.85	9.28	YES	YES	764	254
85714	EB3	EB3	1-5/8”	D	25.13	15.85	9.28	YES	YES	1220	175
85715	EB3	EB3	1-5/8”	D	25.13	15.85	9.28	YES	YES	1915	200
85717	EB3	EB3	1-5/8”	D	25.13	15.85	9.28	YES	YES	1915	200
85303	EB3	EB3	1-5/8”	D	24.75	15.47	9.28	YES	NO	1019	221
85053	EB3	EB3	1-5/8”	C	24.65	15.49	9.16	YES	NO	1019	227
89442	EB3	EB3	1-5/8”	G	24.55	15.55	9.00	YES	NO	1055‡	224‡
85329	EB3	EB3	1-5/8”	D	24.50	15.47	9.03	YES	YES	1550	232
85713	EB3	EB3	1-5/8”	D	24.50	15.47	9.03	YES	YES	1157	180
89412	EB3	EB3	1-5/8”	G	24.26	15.68	8.58	YES	YES	1155‡	169‡
85007	EB3	EB3	1-5/8”	C	24.21	15.30	8.91	YES	YES	1008	171
83225	EB3	EB3	1-3/8”	A	24.14	15.11	9.03	YES	YES	482	159
85307	EB3	EB3	1-5/8”	D	24.01	15.10	8.91	YES	NO	1094	173
85702	EB3	EB3	1-5/8”	D	23.76	15.85	7.91	YES	YES	1093	825
87006	EB3	EB3	2-1/16”	E	23.75	15.25	8.50	YES	YES	1158	272
85736	EB3	EB3	1-5/8”	D	23.62	15.21	8.41	YES	YES	1155	352
87002	EB3	EB3	2-1/16”	E	23.5	15.41	8.09	YES	YES	879	203
89420	EB3	EB3	1-5/8”	G	22.81	14.68	8.13	YES	NO	862‡	258‡
83217	EB3	EB3	1-3/8”	A	22.77	14.49	8.28	YES	YES	539	202
85302	EB3	EB3	1-5/8”	D	22.75	14.66	8.09	YES	NO	836	253
85304	EB3	EB3	1-5/8”	D	22.25	14.22	8.03	YES	NO	767	325
85732	EB3	EB3	2-1/16”	E	22.13	15.11	7.03	YES	YES	2632	382
85718	EB3	EB3	1-5/8”	D	22.13	15.04	7.09	YES	YES	2506	206
85716	EB3	EB3	1-5/8”	D	22.01	14.35	7.66	YES	YES	1220	175
87001	EB3	EB3	2-1/16”	E	20.76	13.76	7.00	YES	YES	1158	190
85734	EB3	EB3	1-5/8”	D	20.74	13.71	7.03	YES	YES	1288	227
85004	EB3	EB3	1-5/8”	C	20.68	13.67	7.01	YES	YES	1019	219
85042	EB3	EB3	1-5/8”	C	20.64	13.61	7.03	YES	YES	333	161
85712	EB3	EB3	1-5/8”	D	20.50	13.47	7.03	YES	YES	1435	562
85720	EB3	EB3	1-5/8”	D	20.50	13.47	7.03	YES	YES	1435	562
83214	EB3	EB3	1-3/8”	A	19.64	12.86	6.78	YES	NO	269	90
89419	EB3	EB3	1-5/8”	G	18.00	12.55	5.45	YES	YES	1352‡	636‡
85300	EB3	EB3	1-5/8”	D	18.00	12.22	5.78	YES	YES	1435	676
85719	EB3	EB3	1-5/8”	D	17.25	11.97	5.28	YES	YES	1517	213
85334	EB3	EB3	1-5/8”	D	14.50	10.47	4.03	YES	YES	1271	319
85327	EB3	ES160	1-5/8”	D	16.01	12.10	3.91	YES	YES	764	162
85322	EB3	ES160	1-5/8”	D	15.26	11.85	3.41	YES	YES	764	162
85912	EB3	ES36	1-5/8”	G	18.68	12.57	6.11	YES	YES	1020	219
83353	EB3	S21	1-3/8”	B	24.84	15.06	9.78	YES	NO	432	214
85312	EB3	S21	1-5/8”	D	23.69	14.85	8.84	YES	YES	717	111

* Damping force, in pounds, to either extend or collapse the shock absorber at an average operating velocity.
Fuerza de amortiguación en libras para extender o comprimir el amortiguador a una velocidad de operación promedio.
La puissance d’amortissement en poids de l’amortisseur, soit comprimé, doit détendu, à une vitesse de fonctionnement moyenne.

‡ For GasSLX Series, forces are at the “Firm” (F) setting. / Para la serie Gas SLX, fas fuerzas estan adjustada en (F) “Firme”. / Pour la série GasSLX, le réglage de la force est sur « Ferme » (F).

SPECIFICATIONS BY END MOUNT
ESPECIFICACIONES POR FIJACIÓN DE EXTREMIDADES
SPÉCIFICATIONS PAR FIXATION DES EXTRÉMITÉS

Gabriel	Mounting Upper	Mounting Lower	Bore	External Diameter Illustration	Lengths Extended	Lengths Collapsed	Stroke	Dust Tube	Recoil Cutoff	Controls * Rebound	Controls * Compression
85733	EB3	S21	1-5/8"	D	23.57	14.73	8.84	YES	YES	717	111
85330	EB3	S21	1-5/8"	D	22.44	14.16	8.28	YES	YES	1140	176
85729	EB3	S21	1-5/8"	D	21.58	13.80	7.78	YES	YES	783	111
85723	EB3	S21	1-5/8"	D	19.94	12.91	7.03	YES	YES	1318	248
83117	EB4	EB1	1-3/8"	A	23.94	14.45	9.49	YES	NO	354	300
G60028	EB4	EB4	1-3/8"		20.79	13.01	7.78	YES	NO		
83119	EB4	ES165	1-3/8"	A	23.96	14.84	9.12	YES	NO	354	300
G60226	EB5	ES24	1-3/8"		21.14	13.36	7.78	YES	YES		
G60079	EB5	ES25	1-3/8"		18.14	11.61	6.53	YES	NO		
G60186	EB5	ES83	1-3/8"		21.64	13.36	8.28	YES	NO		
G60014	EB7	ES24	1-3/8"		14.98	9.95	5.03	YES	NO		
G60010	EB7	ES34	1-3/8"		23.36	14.33	9.03	YES	NO		
83303	EB7	ES36	1-3/8"	B	24.86	15.08	9.78	YES	NO	470	122
83304	EB7	ES36	1-3/8"	B	22.86	14.08	8.78	YES	NO	470	122
G60185	EB7	ES36	1-3/8"		22.56	13.78	8.78	YES	NO		
G60121	ES1	EB1	1-3/8"		14.98	10.20	4.78	YES	YES		
G60077	ES1	ES18	1-3/8"		22.79	14.01	8.78	YES	NO		
G60062	ES1	ES18	1-3/8"		17.98	11.45	6.53	YES	NO		
G60120	ES1	ES25	1-3/8"		18.41	11.88	6.53	YES	NO		
83023	ES10		1"	1-5/8"	8.70	7.09†	2.14	NO	YES	484	157
83021	ES10	ES10	1-3/8"	A	9.36	7.37	1.99	YES	YES	745	315
83002	ES10	ES10	1-3/8"	A	11.61	8.62	3.00	YES	YES	3112	590
83024	ES10	ES10	1-3/8"	2-1/2" D/T	11.61	8.62	2.99	YES	YES	811	320
83016	ES10	ES10	1"	1-5/8"	11.51	8.14	3.37	NO	YES	506	139
83031	ES10	ES10	1-3/8"	2-1/2" D/T	11.49	8.62	2.87	YES	YES	811	314
G60197	ES104	ES69	1-3/8"		24.14	14.61	9.53	YES	NO		
G60255	ES110	ES19	1-3/8"		22.48	13.70	8.78	YES	NO		
83034	ES115	ES115	1-3/16"	1-5/8"	10.04†	7.32	2.97	NO	YES	430	129
G60237	ES119	S38	1-3/8"		22.18	13.40	8.78	YES	NO		
83634	ES120	ES120	1-3/8"	A	27.48	16.23	11.25	YES	YES	779	157
85011	ES120	ES121	1-5/8"	C	27.49	16.46	11.03	YES	NO	1268	186
83120	ES120	S21	1-3/8"	A	22.12	13.63	8.49	YES	YES	779	164
G61159	ES126	ES128	1-3/8"		16.73	10.95	5.17	YES	NO		
G60302	ES126	ES128	1-3/8"		16.48	10.87	5.61	YES	NO		
83042	ES136	ES136	1-3/8"	A	9.88†	8.44†	2.38	YES	YES	954	541
83030	ES136	ES136	1-3/8"	A	9.60†	7.61	2.49	YES	YES	308	87
83008	ES136	ES136	1-3/8"	A	12.98†	10.15†	3.99	YES	YES	699	307
85026	ES136	S21	1-5/8"	C	23.00	13.97	9.03	YES	NO	1079	539
89417	ES136	S21	1-5/8"	G	22.93	14.18	8.75	YES	NO	1226‡	515‡
83006	ES149	EB1	1-3/8"	A	10.66	8.48†	2.77	YES	YES	525	182
83001	ES149	EB1	1-3/8"	A	10.41†	8.36†	3.00	YES	NO	793	363
83038	ES149	EB1	1-3/8"	A	10.41†	8.36†	2.99	YES	YES	336	242
83017	ES149	ES149	1-3/8"	A	10.93	8.35†	3.13	YES	YES	353	138
83009	ES149	ES149	1-3/8"	A	10.41†	8.36†	2.99	YES	YES	793	363
83039	ES149	ES149	1-3/8"	A	10.41†	8.36†	2.99	YES	YES	876	326
89449	ES150	ES150	1-5/8"	G	23.09	14.71	8.38	YES	NO	1519‡	324‡
85918	ES150	ES150	1-5/8"	G	22.96	14.55	8.41	YES	NO	1726	412
85920	ES150	ES150	1-5/8"	G	21.19	13.53	7.66	YES	NO	845	49
85922	ES150	ES150	1-5/8"	G	21.19	13.53	7.66	YES	NO	878	185
G60163	ES151	ES128	1-3/8"		16.48	10.95	5.53	YES	YES		
G60199	ES152	ES153	1-3/8"		23.79	15.01	8.78	YES	YES		
G60160	ES152	ES153	1-3/8"		21.29	13.51	7.78	YES	YES		

* Damping force, in pounds, to either extend or collapse the shock absorber at an average operating velocity.
Fuerza de amortiguación en libras para extender o comprimir el amortiguador a una velocidad de operación promedio.
La puissance d'amortissement en poids de l'amortisseur, soit comprimé, doit détendu, à une vitesse de fonctionnement moyenne.

† At bumper contact / Al contacto cone el tope de goma. / Au contact avec le butoir.

‡ For GasSLX Series, forces are at the "Firm" (F) setting. / Para la serie Gas SLX, fas fuerzas estan adjustada en (F) "Firme". / Pour la série GasSLX, le réglage de la force est sur « Ferme » (F).

SPECIFICATIONS BY END MOUNT
ESPECIFICACIONES POR NÚMERO DE PIEZA
SPÉCIFICATIONS PAR NUMÉRO DE PIÈCE

Gabriel	Mounting Upper	Mounting Lower	Bore	External Diameter Illustration	Lengths Extended	Lengths Collapsed	Stroke	Dust Tube	Recoil Cutoff	Controls * Rebound	Controls * Compression
83025	ES158	ES158	1-3/8”	A	7.98	6.49	1.49	YES	YES	710	230
85724	ES158	ES159	1-5/8”	D	22.78	14.50	8.28	YES	YES	1235	454
89443	ES158	ES159	1-5/8”	G	22.17	14.31	7.86	YES	YES	1206‡	466‡
85331	ES158	ES159	1-5/8”	D	19.66	12.88	6.78	YES	YES	1757	396
85335	ES158	ES159	1-5/8”	D	19.66	12.88	6.78	YES	YES	827	107
85061	ES161	ES162	1-5/8”	C	24.75	15.22	9.53	YES	YES	1216	195
85066	ES161	ES162	1-5/8”	C	24.63	15.22	9.41	YES	YES	812	322
89448	ES161	ES162	1-5/8”	G	24.62	15.54	9.08	YES	YES	782‡	323‡
89450	ES161	ES162	1-5/8”	G	24.62	15.54	9.08	YES	YES	1282‡	193‡
85065	ES161	S21	1-5/8”	C	28.02	16.99	11.03	YES	YES	1059	300
83142	ES162	S42	1-3/8”	A	23.92	14.5	9.43	YES	YES	367	131
83143	ES162	S42	1-3/8”	A	21.92	13.5	8.43	YES	YES	403	137
83032	ES163	ES163	1-3/8”	A	7.85	6.36	1.49	NO	YES	779	135
83116	ES164	ES165	1-3/8”	A	23.81	14.68	9.12	YES	NO	354	300
83118	ES164	ES90	1-3/8”	A	24.45	14.71	9.74	YES	NO	410	311
83035	ES166	ES136	1-3/8”	A	12.96†	9.33	4.13	YES	YES	320	100
83029	ES168	ES169	1-5/8”	C	10.35	7.94	2.41	YES	NO	1303	1349
83040	ES171	ES172	1-3/8”	A	10.41†	8.36†	2.99	YES	YES	876	326
87015	ES173	ES173	45MM	E	15.51	11.18	4.33	YES	YES	4950	900
85737	ES173	ES173	1-5/8”	D	15.11	10.84	4.27	YES	YES	3066	782
85070	ES174	EB3	1-5/8”	C	25.60	15.82	9.78	YES	NO	1100	310
85067	ES174	ES136	1-5/8”	C	30.51	18.10	12.41	YES	YES	676	170
89451	ES174	ES136	1-5/8”	G	30.36	18.41	11.95	YES	YES	645‡	172‡
85937	ES174	S43	1-5/8”	G	18.98	12.26	6.72	YES	YES	1479	337
85936	ES174	S43	1-5/8”	G	17.23	11.38	5.85	YES	YES	1479	337
89456	ES174	S43	1-5/8”	G	17.02	11.29	5.73	YES	YES	975‡	377‡
89454	ES175	ES175	1-5/8”	G	18.23	12.78	5.45	YES	YES	938‡	388‡
85933	ES175	ES175	1-5/8”	G	18.23	12.71	5.52	YES	YES	1089	383
85031	ES176	EB2	1-5/8”	C	25.63	15.85	9.78	YES	NO	941	257
85923	ES177	ES161	1-5/8”	G	22.48	14.50	7.98	YES	YES	1940	221
85931	ES177	ES161	1-5/8”	G	22.48	14.50	7.98	YES	YES	1435	220
85930	ES177	ES161	1-5/8”	G	17.86	12.00	5.86	YES	YES	1617	342
85932	ES178	ES150	1-5/8”	G	21.23	13.62	7.61	YES	YES	1102	430
89453	ES178	ES150	1-5/8”	G	21.10	13.78	7.32	YES	YES	860‡	435‡
G60233	ES18	ES18	1-3/8”		17.98	11.45	6.53	YES	NO		
G60029	ES2	EB4	1-3/8”		28.64	16.86	11.78	YES	NO		
G60012	ES2	EB4	1-3/8”		24.64	14.86	9.78	YES	NO		
G60045	ES2	ES24	1-3/8”		21.98	13.45	8.53	YES	NO		
G60021	ES2	ES24	1-3/8”		19.86	12.58	7.28	YES	NO		
G60307	ES2	ES27	1-3/8”		20.45	12.59	7.86	YES	NO		
G60015	ES24	ES24	1-3/8”		14.98	9.95	5.03	YES	NO		
83022	ES24	ES24	1”	2” D/T	14.28	9.33	4.95	YES	NO	840	152
83010	ES24	ES24	1”	2” D/T	14.15†	9.33	5.07	YES	YES	188	70
83026	ES24	ES24	1-3/8”	A	13.11	9.12	3.99	YES	YES	602	104
83019	ES24	S1	1-3/8”	A	9.42	8.16†	2.28	YES	YES	509	121
83018	ES24	S1	1-3/8”	A	10.30†	8.42†	3.24	YES	YES	515	174
83027	ES24	S10	1-3/8”	A	13.80	9.18	4.62	YES	YES	602	104
G60260	ES25	ES25	1-3/8”		22.98	13.95	9.03	YES	NO		
G60039	ES27	ES27	1-3/8”		20.76	12.98	7.78	YES	NO		
G60309	ES3	ES24	1-3/8”		18.23	11.37	6.86	YES	NO		
G60008	ES3	ES24	1-3/8”		17.98	11.45	6.53	YES	NO		
G60047	ES3	ES34	1-3/8”		26.76	15.98	10.78	YES	NO		

* Damping force, in pounds, to either extend or collapse the shock absorber at an average operating velocity.
Fuerza de amortiguación en libras para extender o comprimir el amortiguador a una velocidad de operación promedio.
La puissance d’amortissement en poids de l’amortisseur, soit comprimé, doit détendu, à une vitesse de fonctionnement moyenne.

‡ For GasSLX Series, forces are at the “Firm” (F) setting. / Para la serie Gas SLX, fas fuerzas estan adjustada en (F) “Firme”. / Pour la série GasSLX, le réglage de la force est sur « Ferme » (F).

† At bumper contact / Al contacto cone el tope de goma. / Au contact avec le butoir.

SPECIFICATIONS BY END MOUNT
ESPECIFICACIONES POR FIJACIÓN DE EXTREMIDADES
SPÉCIFICATIONS PAR FIXATION DES EXTRÉMITÉS

Gabriel	Mounting Upper	Mounting Lower	Bore	External Diameter Illustration	Lengths Extended	Lengths Collapsed	Stroke	Dust Tube	Recoil Cutoff	Controls * Rebound	Controls * Compression
G60112	ES3	ES82	1-3/8"		18.48	11.70	6.78	YES	NO		
G60064	ES31	ES24	1-3/8"		22.97	13.85	9.12	NO	NO		
G60218	ES34	ES34	1-3/8"		26.26	15.73	10.53	YES	NO		
G60206	ES34	ES34	1-3/8"		24.51	14.98	9.53	YES	NO		
G60044	ES34	ES34	1-3/8"		23.36	14.33	9.03	YES	NO		
G61153	ES34	ES36	1-3/8"		22.56	13.78	8.78	YES	NO		
83004	ES35	ES136	1"	2" D/T	9.36†	7.29	2.32	YES	YES	539	324
85916	ES36	EB3	1-5/8"	G	24.61	15.51	9.11	YES	YES	1149	219
85905	ES36	EB3	1-5/8"	G	23.81	16.16	7.66	YES	YES	1020	219
85913	ES36	EB3	1-5/8"	G	22.56	15.20	7.36	YES	YES	1020	219
85057	ES36	EB3	1-5/8"	C	21.45	14.23	7.22	YES	YES	1216	115
85907	ES36	EB3	1-5/8"	G	21.43	14.20	7.23	YES	YES	1216	251
83113	ES36	EB3	1-3/8"	A	20.42	13.43	6.99	YES	YES	997	238
85059	ES36	EB3	1-5/8"	C	19.07	12.79	6.28	YES	YES	928	151
85915	ES36	EB3	1-5/8"	G	19.06	12.70	6.36	YES	YES	1020	219
83115	ES36	EB3	1-3/8"	A	16.19	13.32	4.87	YES	YES	997	238
85072	ES36	ES176	1-5/8"	C	24.17	14.83	9.34	YES	YES	1387	305
83242	ES36	ES36	1-3/8"	A	33.73	20.98	12.75	YES	YES	721	135
85903	ES36	ES36	1-5/8"	G	31.99	19.13	12.86	YES	YES	666	113
83121	ES36	ES36	1-3/8"	A	30.25	18.32	11.93	YES	YES	689	126
83137	ES36	ES36	1-3/8"	A	30.03	17.78	12.25	YES	YES	517	132
85013	ES36	ES36	1-5/8"	C	29.74	17.71	12.03	YES	YES	1019	219
83205	ES36	ES36	1-3/8"	A	29.69	17.69	12.00	YES	YES	660	76
83209	ES36	ES36	1-3/8"	A	29.64	17.61	12.03	YES	YES	670	78
89414	ES36	ES36	1-5/8"	G	29.62	18.04	11.58	YES	YES	1045‡	217‡
85337	ES36	ES36	1-5/8"	D	28.72	17.45	11.28	YES	YES	1318	374
85006	ES36	ES36	1-5/8"	C	28.50	17.09	11.41	YES	YES	1019	219
83125	ES36	ES36	1-3/8"	A	28.12	17.13	10.99	YES	YES	625	115
85043	ES36	ES36	1-5/8"	C	27.63	16.85	10.78	YES	YES	628	163
85904	ES36	ES36	1-5/8"	G	27.61	16.88	10.73	YES	YES	666	113
85010	ES36	ES36	1-5/8"	C	26.74	16.21	10.53	YES	YES	1019	219
83123	ES36	ES36	1-3/8"	A	26.62	16.38	10.24	YES	YES	589	119
85036	ES36	ES36	1-5/8"	C	26.38	16.29	10.09	YES	YES	633	119
89405	ES36	ES36	1-5/8"	G	26.24	16.41	9.83	YES	YES	1009‡	249‡
85321	ES36	ES36	1-5/8"	D	25.36	15.58	9.78	YES	YES	1435	676
83122	ES36	ES36	1-3/8"	A	25.24	15.75	9.49	YES	YES	661	201
83218	ES36	ES36	1-3/8"	A	25.19	15.44	9.75	YES	YES	721	194
665472	ES36	ES36	1-5/8"	G	25.14	15.61	9.53	NO	NO	925	977
89406	ES36	ES36	1-5/8"	G	24.74	15.66	9.08	YES	YES	658‡	125‡
89430	ES36	ES36	1-5/8"	G	24.74	15.54	9.53	YES	YES	1462‡	279‡
85005	ES36	ES36	1-5/8"	C	24.74	15.21	9.53	YES	YES	1019	219
83126	ES36	ES36	1-3/8"	A	24.37	15.25	9.12	YES	YES	625	115
85909	ES36	ES36	1-5/8"	G	24.24	15.13	9.11	YES	YES	700	255
83310	ES36	ES36	1-3/8"	B	24.06	14.69	9.37	YES	NO	559	153
83221	ES36	ES36	1-3/8"	A	24.01	14.73	9.28	YES	NO	599	153
85030	ES36	ES36	1-5/8"	C	24.00	14.84	9.16	YES	YES	1019	219
89440	ES36	ES36	1-5/8"	G	23.86	15.16	8.70	YES	YES	1498‡	561‡
83144	ES36	ES36	1-3/8"	A	23.78	15.03	8.75	YES	YES	596	93
85050	ES36	ES36	1-5/8"	C	23.50	14.47	9.03	YES	NO	525	138
89432	ES36	ES36	1-5/8"	G	23.41	14.66	8.75	YES	NO	1507‡	561‡
665937	ES36	ES36	1-5/8"	G	22.91	16.09	6.82	YES	NO		
85058	ES36	ES36	1-5/8"	C	22.63	14.22	8.41	YES	YES	722	114

* Damping force, in pounds, to either extend or collapse the shock absorber at an average operating velocity.
Fuerza de amortiguación en libras para extender o comprimir el amortiguador a una velocidad de operación promedio.
La puissance d'amortissement en poids de l'amortisseur, soit comprimé, doit détendu, à une vitesse de fonctionnement moyenne.

† At bumper contact / Al contacto cone el tope de goma. / Au contact avec le butoir.

‡ For GasSLX Series, forces are at the "Firm" (F) setting. / Para la serie Gas SLX, fas fuerzas estan adjustada en (F) "Firme". / Pour la série GasSLX, le réglage de la force est sur « Ferme » (F).

SPECIFICATIONS BY END MOUNT
ESPECIFICACIONES POR NÚMERO DE PIEZA
SPÉCIFICATIONS PAR NUMÉRO DE PIÈCE

Gabriel	Mounting Upper	Mounting Lower	Bore	External Diameter Illustration	Lengths Extended	Lengths Collapsed	Stroke	Dust Tube	Recoil Cutoff	Controls * Rebound	Controls * Compression
85044	ES36	ES36	1-5/8”	C	22.63	14.10	8.53	YES	NO	722	212
85919	ES36	ES36	1-5/8”	G	22.48	14.25	8.23	YES	YES	1265	121
632155	ES36	ES36	1-3/16”		22.45	14.10	8.35	NO	NO		
646155	ES36	ES36	1-3/16”		22.45	14.10	8.35	NO	NO		
89431	ES36	ES36	1-5/8”	G	22.41	14.16	8.25	YES	NO	751‡	211‡
85014	ES36	ES36	1-5/8”	C	21.74	13.71	8.03	YES	YES	1019	219
85906	ES36	ES36	1-5/8”	G	21.73	14.00	7.73	YES	YES	700	255
83124	ES36	ES36	1-3/8”	A	21.65	13.75	7.87	YES	YES	750	137
83207	ES36	ES36	1-3/8”	A	21.64	13.61	8.03	YES	YES	553	143
89407	ES36	ES36	1-5/8”	G	21.62	14.04	7.58	YES	YES	652‡	218‡
85910	ES36	ES36	1-5/8”	G	20.73	13.50	7.23	YES	YES	1074	219
85029	ES36	ES36	1-5/8”	C	20.50	13.09	7.41	YES	YES	1019	219
83204	ES36	ES36	1-3/8”	A	20.14	12.86	7.28	YES	YES	451	110
89437	ES36	ES36	1-5/8”	G	20.12	13.29	6.83	YES	YES	1155‡	514‡
83127	ES36	ES36	1-3/8”	A	20.12	13.13	6.99	YES	YES	940	218
85060	ES36	ES36	1-5/8”	C	19.75	12.72	7.03	YES	YES	943	405
85338	ES36	ES36	1-5/8”	D	19.47	12.7	6.77	YES	YES	1664	420
85051	ES36	ES36	1-5/8”	C	18.75	12.22	6.53	YES	YES	1019	139
85908	ES36	ES36	1-5/8”	G	18.48	12.25	6.23	YES	YES	1020	219
83130	ES36	ES36	1-3/8”	A	17.99	12.01	5.99	YES	YES	871	177
85934	ES36	ES36	1-5/8”	G	17.73	12.00	5.73	YES	YES	3511	1063
85738	ES36	ES36	1-5/8”	D	17.47	11.7	5.77	YES	YES	1830	416
85323	ES36	ES36	1-5/8”	D	17.36	11.58	5.78	YES	YES	1085	163
89436	ES36	ES36	1-5/8”	G	17.24	11.91	5.33	YES	YES	998‡	217‡
85000	ES36	ES36	1-5/8”	C	17.22	11.46	5.76	YES	YES	1019	219
83203	ES36	ES36	1-3/8”	A	17.10	11.36	5.74	YES	YES	609	114
83128	ES36	ES36	1-3/8”	A	16.87	11.51	5.37	YES	YES	940	218
85911	ES36	ES36	1-5/8”	G	16.86	11.50	5.36	YES	YES	1020	219
85938	ES36	ES36	1-5/8”	G	16.06	10.78	5.28	YES	YES	1581	432
85064	ES36	ES36	1-5/8”	C	16.01	10.72	5.28	YES	YES	1481	340
85045	ES36	ES36	1-5/8”	C	14.51	10.10	4.41	YES	YES	1020	219
85939	ES36	ES36	1-5/8”	G	14.44	10.03	4.41	YES	YES	1719	420
85914	ES36	ES36	1-5/8”	G	14.36	10.25	4.11	YES	YES	1020	219
85052	ES36	ES36	1-5/8”	C	13.25	9.47	3.78	YES	YES	1019	139
83635	ES36	S21	1-3/8”	A	21.74	13.25	8.49	YES	NO	558	119
83109	ES36	S42	1-3/8”	A	26.14	15.90	10.24	YES	YES	345	78
83111	ES36	S42	1-3/8”	A	26.14	15.90	10.24	YES	YES	560	141
83138	ES36	S42	1-3/8”	A	23.55	14.42	9.12	YES	YES	997	231
83110	ES36	S42	1-3/8”	A	22.89	14.27	8.62	YES	YES	450	143
83112	ES36	S42	1-3/8”	A	21.52	13.40	8.12	YES	YES	1064	343
83033	ES53	ES53	1-3/8”	A	13.99	10.37	3.62	YES	YES	494	312
G60219	ES69	ES69	1-3/8”		15.48	10.45	5.03	YES	YES		
G60051	ES8	ES82	1-3/8”		16.73	10.70	6.03	NO	NO		
G60080	ES8	ES83	1-3/8”		22.98	13.95	9.03	YES	NO		
G60111	ES82	ES82	1-3/8”		24.48	14.70	9.78	YES	NO		
G60214	ES82	ES82	1-3/8”		22.48	13.70	8.78	YES	NO		
G60179	ES83	EB1	1-3/8”		27.48	16.20	11.28	YES	NO		
83131	ES83	ES83	1-3/8”	A	27.80	18.18	9.62	YES	NO	212	129
G61116	ES83	ES83	1-3/8”		20.76	12.98	7.78	YES	NO		
83028	ES86	ES167	1-3/8”	A	9.94	7.57	2.37	YES	YES	445	531
85924	ES90	ES36	1-5/8”	G	20.41	12.96	7.46	YES	NO	1036	122
83636	ES90	ES90	1-3/8”	A	27.72	16.95	10.77	YES	YES	505	148

* Damping force, in pounds, to either extend or collapse the shock absorber at an average operating velocity.
Fuerza de amortiguación en libras para extender o comprimir el amortiguador a una velocidad de operación promedio.
La puissance d’amortissement en poids de l’amortisseur, soit comprimé, doit détendu, à une vitesse de fonctionnement moyenne.

‡ For GasSLX Series, forces are at the “Firm” (F) setting. / Para la serie Gas SLX, fas fuerzas estan adjustada en (F) “Firme”. / Pour la série GasSLX, le réglage de la force est sur « Ferme » (F).

SPECIFICATIONS BY END MOUNT
ESPECIFICACIONES POR FIJACIÓN DE EXTREMIDADES
SPÉCIFICATIONS PAR FIXATION DES EXTRÉMITÉS

Gabriel	Mounting Upper	Mounting Lower	Bore	External Diameter Illustration	Lengths Extended	Lengths Collapsed	Stroke	Dust Tube	Recoil Cutoff	Controls * Rebound	Controls * Compression
83100	ES90	ES90	1-3/8"	A	26.60	16.11	10.49	YES	YES	481	142
85926	ES90	ES90	1-5/8"	G	26.48	17.96	8.53	YES	YES	1387	279
85003	ES90	ES90	1-5/8"	C	25.37	15.59	9.78	YES	YES	437	182
89411	ES90	ES90	1-5/8"	G	25.36	15.59	9.78	YES	YES	436‡	186‡
85927	ES90	ES90	1-5/8"	G	24.74	15.38	9.36	YES	YES	1288	388
83101	ES90	ES90	1-3/8"	A	24.60	15.11	9.49	YES	YES	481	142
85925	ES90	ES90	1-5/8"	G	22.54	15.59	6.96	YES	NO	761	144
85928	ES90	ES90	1-5/8"	G	20.28	13.21	7.08	YES	NO	957	229
85929	ES90	ES90	1-5/8"	G	20.28	13.21	7.08	YES	NO	2214	267
83135	ES90	ES90	1-3/8"	A	19.48	12.36	7.12	YES	YES	519	121
83020	ES91	ES91	1-3/8"	A	9.41	7.17	2.24	YES	YES	796	255
G60251	ES99	EB2	1-3/8"		19.64	12.36	5.08	YES	NO		
G60043	S1	BP13	1-3/8"		15.70	9.92	5.78	NO	NO		
G60017	S1	BP13	1-3/8"		13.70	8.92	4.78	NO	NO		
G60338	S1	BP17	1-3/8"		14.70	9.34	5.36	NO	NO		
G60301	S1	BP26	1-3/8"		14.10	9.34	4.76	YES	YES		
G60049	S1	BP30	1-3/8"		13.70	8.92	4.78	NO	NO		
G60074	S1	BP4	1-3/8"		13.95	9.17	4.78	YES	NO		
G60078	S1	BP4	1-3/8"		13.70	8.92	4.78	NO	NO		
G60052	S1	BP7	1-3/8"		20.45	12.67	7.78	YES	YES		
G60076	S1	BP7	1-3/8"		14.33	9.30	5.03	NO	NO		
G60354	S1	BP7	1-3/8"		14.20	9.09	5.11	NO	NO		
G60313	S1	BP7	1-3/8"		13.20	8.59	4.61	NO	NO		
83003	S1	BP7	1-3/8"	A	11.76	8.95†	3.4	YES	YES	248	100
G60304	S1	BP8	1-3/8"		14.70	9.34	5.36	YES	NO		
G60137	S1	EB1	1-3/8"		22.95	13.67	9.28	YES	NO		
G60107	S1	EB1	1-3/8"		22.45	13.42	9.03	YES	NO		
G60164	S1	EB1	1-3/8"		21.95	13.17	8.78	YES	NO		
G61139	S1	EB1	1-3/8"		15.89	10.11	5.78	YES	NO		
G60091	S1	EB2	1-3/8"		21.04	12.95	8.09	YES	NO		
G61121	S1	ES113	1-3/8"		18.54	11.76	6.78	YES	YES		
G60086	S1	ES113	1-3/8"		13.95	9.17	4.78	YES	NO		
G60153	S1	ES113	1-3/8"		13.61	9.08	4.53	YES	NO		
G61122	S1	ES118	1-3/8"		13.89	9.11	4.78	YES	NO		
G60253	S1	ES153	1-3/8"		19.04	11.76	7.28	YES	NO		
G60070	S1	ES17	1-3/8"		22.99	13.74	9.25	NO	YES		
G60105	S1	ES17	1-3/8"		16.95	10.92	6.03	YES	YES		
G60104	S1	ES17	1-3/8"		14.95	9.67	5.28	YES	NO		
G60136	S1	ES17	1-3/8"		14.95	9.67	5.28	YES	NO		
G60165	S1	ES17	1-3/8"		14.95	9.67	5.28	YES	NO		
G60305	S1	ES17	1-3/8"		14.95	9.59	5.36	YES	NO		
G60109	S1	ES17	1-3/8"		14.45	9.42	5.03	YES	NO		
G60310	S1	ES17	1-3/8"		14.11	9.00	5.11	YES	NO		
G60303	S1	ES17	1-3/8"		12.60	8.59	4.01	YES	YES		
G60306	S1	ES24	1-3/8"		14.70	9.34	5.36	NO	NO		
G60024	S1	ES25	1-3/8"		23.33	14.05	9.28	YES	NO		
G60129	S1	ES25	1-3/8"		22.45	13.42	9.03	YES	NO		
G60030	S1	ES25	1-3/8"		22.33	13.80	8.53	YES	YES		
G60011	S1	ES25	1-3/8"		18.83	11.80	7.03	YES	NO		
G60217	S1	ES34	1-3/8"		23.27	14.24	9.03	YES	YES		
G60216	S1	ES34	1-3/8"		22.30	13.77	8.53	YES	YES		
G60205	S1	ES34	1-3/8"		13.80	9.52	4.28	YES	YES		

* Damping force, in pounds, to either extend or collapse the shock absorber at an average operating velocity.
Fuerza de amortiguación en libras para extender o comprimir el amortiguador a una velocidad de operación promedio.
La puissance d'amortissement en poids de l'amortisseur, soit comprimé, doit détendu, à une vitesse de fonctionnement moyenne.

‡ For GasSLX Series, forces are at the "Firm" (F) setting. / Para la serie Gas SLX, fas fuerzas estan adjustada en (F) "Firme". / Pour la série GasSLX, le réglage de la force est sur « Ferme » (F).

† At bumper contact / Al contacto cone el tope de goma. / Au contact avec le butoir.

SPECIFICATIONS BY END MOUNT
ESPECIFICACIONES POR NÚMERO DE PIEZA
SPÉCIFICATIONS PAR NUMÉRO DE PIÈCE

Gabriel	Mounting Upper	Mounting Lower	Bore	External Diameter Illustration	Lengths Extended	Lengths Collapsed	Stroke	Dust Tube	Recoil Cutoff	Controls * Rebound	Controls * Compression
G60194	S1	ES69	1-3/8”		14.45	9.42	5.03	YES	NO		
G60002	S1	S1	1-3/8”		22.92	13.39	9.53	YES	NO		
83400	S1	S1	1-3/16”	F	22.02	12.82	9.20	YES	NO	301	120
G60046	S1	S1	1-3/8”		20.42	12.14	8.28	YES	NO		
83014	S1	S1	1-3/8”	A	10.48	7.11	3.37	NO	NO	544	501
G61140	S1	S12	1-3/8”		15.36	10.33	5.03	YES	NO		
G60264	S10	BP11	1-3/8”		12.27	8.03	4.24	YES	NO		
G60181	S10	BP7	1-3/8”		16.33	10.80	5.53	YES	YES		
G60072	S10	EB6	1-3/8”		22.99	13.74	9.25	NO	YES		
G60033	S10	EB6	1-3/8”		18.58	11.62	6.96	YES	YES		
G60250	S10	ES17	1-3/8”		15.89	10.11	5.78	YES	NO		
G60073	S10	ES25	1-3/8”		29.86	17.49	12.37	NO	YES		
G60071	S10	ES25	1-3/8”		23.24	13.99	9.25	NO	YES		
G60041	S10	ES25	1-3/8”		18.45	11.67	6.78	YES	YES		
G60026	S10	ES25	1-3/8”		16.45	10.67	5.78	YES	YES		
G61144	S12		1-3/8”		15.36	10.33	5.03	YES	NO		
G61124	S12	BP11	1-3/8”	C	14.59	10.21	4.38	YES	NO		
G60154	S12	EB2	1-3/8”		21.11	13.08	8.03	YES	YES		
G60269	S12	EB2	1-3/8”		21.05	12.77	8.28	YES	NO		
G60258	S12	ES25	1-3/8”		28.39	16.36	12.03	YES	NO		
G61118	S12	ES25	1-3/8”	C	24.34	14.46	9.88	YES	NO		
G60259	S12	ES26	1-3/8”		15.39	9.86	5.53	YES	NO		
G61158	S12	ES60	1-3/8”		15.70	10.92	4.78	YES	NO		
83317	S16	ES23	1-3/8”	B	27.33	15.99	11.34	YES	NO		
83301	S16	ES90	1-3/8”	B	24.52	14.74	9.78	YES	YES	653	86
83318	S16	S16	1-3/8”	B	22.53	13.50	9.03	YES	NO	323	77
83613	S16	S16	1-3/8”	A	21.04	12.76	8.28	YES			
G60122	S17	ES114	1-3/8”		21.95	13.42	8.53	YES	YES		
85731	S21	EB3	1-5/8”	D	30.57	18.54	12.03	YES	YES	1517	293
85703	S21	EB3	1-5/8”	D	29.57	18.54	11.03	YES	YES	1435	186
85033	S21	EB3	1-5/8”	C	27.21	17.37	9.84	YES	YES	764	254
89427	S21	EB3	1-5/8”	G	27.20	17.50	9.70	YES	YES	794‡	253‡
85317	S21	EB3	1-5/8”	D	27.18	17.42	9.76	YES	YES	764	254
85711	S21	EB3	1-5/8”	D	24.57	15.29	9.28	YES	YES	1435	208
87000	S21	EB3	2-1/16”	E	24.46	15.21	9.25	YES	YES	1332	300
85311	S21	EB3	1-5/8”	D	23.95	14.79	9.16	YES	YES	764	254
89424	S21	EB3	1-5/8”	G	23.70	15.00	8.70	YES	YES	794‡	253‡
85710	S21	EB3	1-5/8”	D	23.45	15.10	8.34	YES	YES	994	248
85319	S21	ES150	1-5/8”	D	22.20	13.92	8.28	YES	YES	988	454
89428	S21	ES150	1-5/8”	G	21.96	14.13	7.83	YES	YES	958‡	446‡
85009	S21	ES36	1-5/8”	C	23.52	14.36	9.16	YES	YES	857	144
83134	S21	ES36	1-3/8”	A	22.24	13.50	8.74	YES	NO	430	49
85921	S21	ES36	1-5/8”	G	22.03	13.50	8.53	YES	NO	2053	339
85316	S21	ES36	1-5/8”	D	20.61	12.85	7.76	YES	NO	943	443
89426	S21	ES36	1-5/8”	G	20.43	12.93	7.50	YES	NO	926‡	419‡
85056	S21	ES36	1-5/8”	C	20.15	12.87	7.28	YES	YES	732	114
89441	S21	ES36	1-5/8”	G	20.14	13.06	7.08	YES	YES	761‡	126‡
85935	S21	ES36	1-5/8”	G	18.70	11.92	6.78	YES	NO	1054	419
85709	S21	S21	1-5/8”	D	31.64	18.36	13.28	YES	YES	700	203
85727	S21	S21	1-5/8”	D	29.89	17.36	12.53	YES	YES	783	111
83106	S21	S21	1-3/8”	A	29.25	16.76	12.49	YES	NO	451	80
83136	S21	S21	1-3/8”	A	29.25	16.76	12.49	YES	NO	914	65

* Damping force, in pounds, to either extend or collapse the shock absorber at an average operating velocity.
Fuerza de amortiguación en libras para extender o comprimir el amortiguador a una velocidad de operación promedio.
La puissance d’amortissement en poids de l’amortisseur, soit comprimé, doit détendu, à une vitesse de fonctionnement moyenne.

‡ For GasSLX Series, forces are at the “Firm” (F) setting. / Para la serie Gas SLX, fas fuerzas estan adjustada en (F) “Firme”. / Pour la série GasSLX, le réglage de la force est sur « Ferme » (F).

SPECIFICATIONS BY END MOUNT
ESPECIFICACIONES POR FIJACIÓN DE EXTREMIDADES
SPÉCIFICATIONS PAR FIXATION DES EXTRÉMITÉS

Gabriel	Mounting Upper	Mounting Lower	Bore	External Diameter Illustration	Lengths Extended	Lengths Collapsed	Stroke	Dust Tube	Recoil Cutoff	Controls * Rebound	Controls * Compression
85048	S21	S21	1-5/8”	C	29.16	16.88	12.28	YES	NO	432	106
85318	S21	S21	1-5/8”	D	27.37	16.36	11.01	YES	YES	1372	192
85722	S21	S21	1-5/8”	D	27.15	16.43	10.72	YES	YES	1264	369
85069	S21	S21	1-5/8”	C	26.28	15.94	10.34	YES	YES	762	255
89455	S21	S21	1-5/8”	G	26.28	15.92	10.36	YES	YES	791‡	276‡
85328	S21	S21	1-5/8”	D	25.64	15.36	10.28	YES	NO	930	383
85071	S21	S21	1-5/8”	C	25.57	15.04	10.53	YES	NO	610	107
85049	S21	S21	1-5/8”	C	25.53	15.00	10.53	YES	NO	597	107
85728	S21	S21	1-5/8”	D	24.39	14.86	9.53	YES	YES	1435	510
83456	S21	S21	1-3/8”	B	24.03	14.25	9.78	YES	NO	566	80
89447	S21	S21	1-5/8”	G	23.65	14.57	9.08	YES	YES	702‡	241‡
85707	S21	S21	1-5/8”	D	23.65	14.40	9.25	YES	YES	1761	986
87011	S21	S21	2-1/16”	E	23.65	14.40	9.25	YES	YES	1750	1050
87012	S21	S21	2-1/16”	E	23.65	14.40	9.25	YES	YES	650	364
87013	S21	S21	2-1/16”	E	23.65	14.40	9.25	YES	YES	1075	585
85705	S21	S21	1-5/8”	D	23.65	14.24	9.41	YES	YES	639	436
85706	S21	S21	1-5/8”	D	23.65	14.24	9.41	YES	YES	1086	696
85325	S21	S21	1-5/8”	D	23.64	14.36	9.28	YES	NO	1024	240
83102	S21	S21	1-3/8”	A	22.94	13.56	9.38	YES	YES	513	333
85324	S21	S21	1-5/8”	D	22.14	13.61	8.53	YES	NO	579	114
85027	S21	S21	1-5/8”	C	21.52	12.99	8.53	YES	NO	1008	539
89418	S21	S21	1-5/8”	G	21.44	13.19	8.25	YES	NO	1266‡	515‡
85708	S21	S21	1-5/8”	D	20.64	12.86	7.78	YES	YES	914	204
85326	S21	S21	1-5/8”	D	19.64	12.36	7.28	YES	NO	799	142
83103	S21	S21	1-3/8”	A	19.64	11.89	7.75	YES	YES	517	301
85902	S21	S21	1-5/8”	G	19.01	12.03	6.98	YES	YES	1441	267
85336	S21	S21	1-5/8”	D	18.76	11.86	6.90	YES	NO	861	200
89423	S21	S21	1-5/8”	G	18.65	12.07	6.58	YES	YES	1352‡	573‡
85900	S21	S21	1-5/8”	G	17.27	11.16	6.11	YES	YES	1467	337
85701	S21	S21	1-5/8”	D	15.64	10.36	5.28	YES	YES	914	204
G60114	S28	ES25	1-3/8”		15.09	10.06	5.03	NO	YES		
G60038	S28	ES83	1-3/8”		15.09	10.06	5.03	NO	YES		
G60098	S29	BP11	1-3/8”		14.42	9.64	4.78	NO	YES		
G60312	S29	ES84	1-3/8”		21.15	16.49	4.66	YES	YES		
G60089	S32	S32	1-3/8”		21.42	12.64	8.78	YES	NO		
G60124	S32	S32	1-3/8”		21.11	12.64	8.78	YES	NO		
G60221	S36	BP7	1-3/8”		18.01	13.48	4.53	YES	NO		
G61148	S36	EB1	1-3/8”		15.32	10.29	5.03	YES	NO		
G60171	S36	EB1	1-3/8”		15.09	10.06	5.03	NO	YES		
G60182	S36	EB1	1-3/8”		15.07	10.04	5.03	YES	YES		
G60330	S36	EB1	1-3/8”		14.72	9.71	5.01	YES	YES		
G60162	S36	EB1	1-3/8”		14.56	9.78	4.78	YES	YES		
G60023	S36	ES25	1-3/8”		17.19	11.16	6.03	NO	YES		
G60183	S36	ES83	1-3/8”		22.57	14.29	8.28	YES	YES		
G60184	S36	ES83	1-3/8”		20.07	12.54	7.53	YES	YES		
G60158	S36	ES83	1-3/8”		16.06	10.53	5.53	YES	YES		
G60177	S38	EB2	1-3/8”		23.68	14.15	9.53	YES	NO		
G60176	S38	S38	1-3/8”		23.56	13.78	9.78	YES	NO		
G60238	S38	S38	1-3/8”		23.06	13.53†	9.53	YES	NO		
G61156	S39		1-3/8”		21.95	13.17	8.78	YES	NO		
G61155	S39	EB1	1-3/8”		21.45	13.17	8.28	YES	YES		
G61154	S39	ES17	1-3/8”		12.23	8.45	3.78	YES	NO		

* Damping force, in pounds, to either extend or collapse the shock absorber at an average operating velocity.
Fuerza de amortiguación en libras para extender o comprimir el amortiguador a una velocidad de operación promedio.
La puissance d’amortissement en poids de l’amortisseur, soit comprimé, doit détendu, à une vitesse de fonctionnement moyenne.

‡ For GasSLX Series, forces are at the “Firm” (F) setting. / Para la serie Gas SLX, fas fuerzas estan adjustada en (F) “Firme”. / Pour la série GasSLX, le réglage de la force est sur « Ferme » (F).

SPECIFICATIONS BY END MOUNT
ESPECIFICACIONES POR NÚMERO DE PIEZA
SPÉCIFICATIONS PAR NUMÉRO DE PIÈCE

Gabriel	Mounting Upper	Mounting Lower	Bore	External Diameter Illustration	Lengths Extended	Lengths Collapsed	Stroke	Dust Tube	Recoil Cutoff	Controls * Rebound	Controls * Compression
G60249	S39	ES83	1-3/8”		18.05	11.27	6.78	YES	NO		
G60087	S4	EB1	1-3/8”		19.95	12.42	7.53	YES	NO		
G60106	S4	ES17	1-3/8”		22.45	13.42	9.03	YES	NO		
83105	S40	ES160	1-3/8”	A	31.91	18.29	13.62	YES	NO	559	150
83114	S40	ES35	1-3/8”	A	23.00	13.76	9.24	YES	NO	450	102
85332	S42	ES36	1-5/8”	D	20.64	12.98	7.66	YES	YES	2351	967
85333	S42	ES36	1-5/8”	D	20.64	12.98	7.66	YES	YES	1241	534
85310	S42	S42	1-5/8”	D	18.65	11.74	6.91	YES	YES	1379	578
G61114	S6	BP35	1-3/8”		17.95	13.42	4.53	YES	YES		
G61112	S6	BP35	1-3/8”		13.73	9.45	4.28	YES	YES		
G60257	S6	BP7	1-3/8”		15.39	9.86	5.53	YES	NO		
G60263	S6	ES22	1-3/8”		21.39	12.86	8.53	YES	NO		

* Damping force, in pounds, to either extend or collapse the shock absorber at an average operating velocity.
Fuerza de amortiguación en libras para extender o comprimir el amortiguador a una velocidad de operación promedio.
La puissance d’amortissement en poids de l’amortisseur, soit comprimé, doit détendu, à une vitesse de fonctionnement moyenne.

SPECIFICATIONS BY PART NUMBER
ESPECIFICACIONES POR FIJACIÓN DE EXTREMIDADES
SPÉCIFICATIONS PAR FIXATION DES EXTRÉMITÉS

Gabriel	Mounting Upper	Mounting Lower	Bore	External Diameter Illustration	Lengths Extended	Lengths Collapsed	Stroke	Dust Tube	Recoil Cutoff	Controls * Rebound	Controls * Compression
G60002	S1	S1	1-3/8"		22.92	13.39	9.53	YES	NO		
G60003	EB1	EB1	1-3/8"		17.98	11.45	6.53	YES	NO		
G60007	EB1	ES25	1-3/8"		22.98	13.95	9.03	YES	NO		
G60008	ES3	ES24	1-3/8"		17.98	11.45	6.53	YES	NO		
G60010	EB7	ES34	1-3/8"		23.36	14.33	9.03	YES	NO		
G60011	S1	ES25	1-3/8"		18.83	11.80	7.03	YES	NO		
G60012	ES2	EB4	1-3/8"		24.64	14.86	9.78	YES	NO		
G60014	EB7	ES24	1-3/8"		14.98	9.95	5.03	YES	NO		
G60015	ES24	ES24	1-3/8"		14.98	9.95	5.03	YES	NO		
G60017	S1	BP13	1-3/8"		13.70	8.92	4.78	NO	NO		
G60021	ES2	ES24	1-3/8"		19.86	12.58	7.28	YES	NO		
G60023	S36	ES25	1-3/8"		17.19	11.16	6.03	NO	YES		
G60024	S1	ES25	1-3/8"		23.33	14.05	9.28	YES	NO		
G60026	S10	ES25	1-3/8"		16.45	10.67	5.78	YES	YES		
G60028	EB4	EB4	1-3/8"		20.79	13.01	7.78	YES	NO		
G60029	ES2	EB4	1-3/8"		28.64	16.86	11.78	YES	NO		
G60030	S1	ES25	1-3/8"		22.33	13.80	8.53	YES	YES		
G60031	EB1	EB1	1-3/8"		19.98	12.45	7.53	YES	NO		
G60033	S10	EB6	1-3/8"		18.58	11.62	6.96	YES	YES		
G60035	EB1	ES83	1-3/8"		21.48	13.20	8.28	YES	NO		
G60038	S28	ES83	1-3/8"		15.09	10.06	5.03	NO	YES		
G60039	ES27	ES27	1-3/8"		20.76	12.98	7.78	YES	NO		
G60041	S10	ES25	1-3/8"		18.45	11.67	6.78	YES	YES		
G60042	EB1	ES25	1-3/8"		19.98	12.45	7.53	YES	NO		
G60043	S1	BP13	1-3/8"		15.70	9.92	5.78	NO	NO		
G60044	ES34	ES34	1-3/8"		23.36	14.33	9.03	YES	NO		
G60045	ES2	ES24	1-3/8"		21.98	13.45	8.53	YES	NO		
G60046	S1	S1	1-3/8"		20.42	12.14	8.28	YES	NO		
G60047	ES3	ES34	1-3/8"		26.76	15.98	10.78	YES	NO		
G60048	EB1	ES106	1-3/8"		26.98	15.95	11.03	NO	NO		
G60049	S1	BP30	1-3/8"		13.70	8.92	4.78	NO	NO		
G60050	BP8	ES34	1-3/8"		23.98	14.45	9.53	YES	NO		
G60051	ES8	ES82	1-3/8"		16.73	10.70	6.03	NO	NO		
G60052	S1	BP7	1-3/8"		20.45	12.67	7.78	YES	YES		
G60053	BP2	EB1	1-3/8"		19.98	12.45	7.53	YES	NO		
G60062	ES1	ES18	1-3/8"		17.98	11.45	6.53	YES	NO		
G60063	EB1	ES106	1-3/8"		22.98	13.95	9.03	YES	NO		
G60064	ES31	ES24	1-3/8"		22.97	13.85	9.12	NO	NO		
G60065	EB1	ES34	1-3/8"		29.85	17.47	12.38	NO	NO		
G60066	EB1	ES83	1-3/8"		29.72	17.23	12.49	NO	NO		
G60067	EB1	EB1	1-3/8"		25.97	15.35	10.62	NO	NO		
G60068	EB1	ES25	1-3/8"		25.97	15.35	10.62	NO	NO		
G60069	EB1	EB1	1-3/8"		22.97	13.85	9.12	NO	NO		
G60070	S1	ES17	1-3/8"		22.99	13.74	9.25	NO	YES		
G60071	S10	ES25	1-3/8"		23.24	13.99	9.25	NO	YES		
G60072	S10	EB6	1-3/8"		22.99	13.74	9.25	NO	YES		
G60073	S10	ES25	1-3/8"		29.86	17.49	12.37	NO	YES		
G60074	S1	BP4	1-3/8"		13.95	9.17	4.78	YES	NO		
G60075	EB1	EB1	1-3/8"		23.98	14.45	9.53	YES	NO		
G60076	S1	BP7	1-3/8"		14.33	9.30	5.03	NO	NO		
G60077	ES1	ES18	1-3/8"		22.79	14.01	8.78	YES	NO		
G60078	S1	BP4	1-3/8"		13.70	8.92	4.78	NO	NO		

* Damping force, in pounds, to either extend or collapse the shock absorber at an average operating velocity.
Fuerza de amortiguación en libras para extender o comprimir el amortiguador a una velocidad de operación promedio.
La puissance d'amortissement en poids de l'amortisseur, soit comprimé, doit détendu, à une vitesse de fonctionnement moyenne.

SPECIFICATIONS BY PART NUMBER
ESPECIFICACIONES POR FIJACIÓN DE EXTREMIDADES
SPÉCIFICATIONS PAR FIXATION DES EXTRÉMITÉS

Gabriel	Mounting Upper	Mounting Lower	Bore	External Diameter Illustration	Lengths Extended	Lengths Collapsed	Stroke	Dust Tube	Recoil Cutoff	Controls * Rebound	Controls * Compression
G60079	EB5	ES25	1-3/8”		18.14	11.61	6.53	YES	NO		
G60080	ES8	ES83	1-3/8”		22.98	13.95	9.03	YES	NO		
G60081	EB1	ES83	1-3/8”		26.76	15.98	10.78	YES	NO		
G60083	BP1	ES27	1-3/8”		23.16	14.13	9.03	YES	NO		
G60084	EB1	ES83	1-3/8”		25.48	15.20	10.28	YES	NO		
G60086	S1	ES113	1-3/8”		13.95	9.17	4.78	YES	NO		
G60087	S4	EB1	1-3/8”		19.95	12.42	7.53	YES	NO		
G60088	EB2	S32	1-3/8”		22.68	13.90	8.78	YES	NO		
G60089	S32	S32	1-3/8”		21.42	12.64	8.78	YES	NO		
G60091	S1	EB2	1-3/8”		21.04	12.95	8.09	YES	NO		
G60096	EB1	EB1	1-3/8”		21.69	13.47	8.22	YES	NO		
G60097	BP8	ES34	1-3/8”		26.76	16.23	10.53	YES	YES		
G60098	S29	BP11	1-3/8”		14.42	9.64	4.78	NO	YES		
G60099	EB1	ES25	1-3/8”		18.98	11.95	7.03	YES	NO		
G60100	EB1	S1	1-3/8”		18.95	11.67	7.28	YES	NO		
G60101	EB1	EB1	1-3/8”		22.48	13.70	8.78	YES	NO		
G60103	EB2	EB2	1-3/8”		21.29	13.26	8.03	YES	NO		
G60104	S1	ES17	1-3/8”		14.95	9.67	5.28	YES	NO		
G60105	S1	ES17	1-3/8”		16.95	10.92	6.03	YES	YES		
G60106	S4	ES17	1-3/8”		22.45	13.42	9.03	YES	NO		
G60107	S1	EB1	1-3/8”		22.45	13.42	9.03	YES	NO		
G60109	S1	ES17	1-3/8”		14.45	9.42	5.03	YES	NO		
G60110	BP1	ES130	1-3/8”		25.48	15.20	10.28	YES	NO		
G60111	ES82	ES82	1-3/8”		24.48	14.70	9.78	YES	NO		
G60112	ES3	ES82	1-3/8”		18.48	11.70	6.78	YES	NO		
G60113	EB1	ES24	1-3/8”		15.98	10.45	5.53	YES	NO		
G60114	S28	ES25	1-3/8”		15.09	10.06	5.03	NO	YES		
G60119	EB2	ES27	1-3/8”		24.14	14.61	9.53	YES	NO		
G60120	ES1	ES25	1-3/8”		18.41	11.88	6.53	YES	NO		
G60121	ES1	EB1	1-3/8”		14.98	10.20	4.78	YES	YES		
G60122	S17	ES114	1-3/8”		21.95	13.42	8.53	YES	YES		
G60124	S32	S32	1-3/8”		21.11	12.64	8.78	YES	NO		
G60128	EB2	EB2	1-3/8”		21.11	13.24	7.87	YES	NO		
G60129	S1	ES25	1-3/8”		22.45	13.42	9.03	YES	NO		
G60136	S1	ES17	1-3/8”		14.95	9.67	5.28	YES	NO		
G60137	S1	EB1	1-3/8”		22.95	13.67	9.28	YES	NO		
G60143	EB1	ES83	1-3/8”		26.98	15.95	11.03	YES	NO		
G60144	EB1	ES83	1-3/8”		22.98	13.95	9.03	YES	NO		
G60152	EB1	ES142	1-3/8”		19.64	12.36	7.28	YES	NO		
G60153	S1	ES113	1-3/8”		13.61	9.08	4.53	YES	NO		
G60154	S12	EB2	1-3/8”		21.11	13.08	8.03	YES	YES		
G60158	S36	ES83	1-3/8”		16.06	10.53	5.53	YES	YES		
G60160	ES152	ES153	1-3/8”		21.29	13.51	7.78	YES	YES		
G60161	BP33	ES83	1-3/8”		25.48	15.20	10.28	YES	NO		
G60162	S36	EB1	1-3/8”		14.56	9.78	4.78	YES	YES		
G60163	ES151	ES128	1-3/8”		16.48	10.95	5.53	YES	YES		
G60164	S1	EB1	1-3/8”		21.95	13.17	8.78	YES	NO		
G60165	S1	ES17	1-3/8”		14.95	9.67	5.28	YES	NO		
G60171	S36	EB1	1-3/8”		15.09	10.06	5.03	NO	YES		
G60176	S38	S38	1-3/8”		23.56	13.78	9.78	YES	NO		
G60177	S38	EB2	1-3/8”		23.68	14.15	9.53	YES	NO		
G60179	ES83	EB1	1-3/8”		27.48	16.20	11.28	YES	NO		

* Damping force, in pounds, to either extend or collapse the shock absorber at an average operating velocity.
Fuerza de amortiguación en libras para extender o comprimir el amortiguador a una velocidad de operación promedio.
La puissance d’amortissement en poids de l’amortisseur, soit comprimé, doit détendu, à une vitesse de fonctionnement moyenne.

SPECIFICATIONS BY PART NUMBER
ESPECIFICACIONES POR FIJACIÓN DE EXTREMIDADES
SPÉCIFICATIONS PAR FIXATION DES EXTRÉMITÉS

Gabriel	Mounting Upper	Mounting Lower	Bore	External Diameter Illustration	Lengths Extended	Lengths Collapsed	Stroke	Dust Tube	Recoil Cutoff	Controls * Rebound	Controls * Compression
G60180	EB1	S7	1-3/8”		19.20	11.92	7.28	YES	YES		
G60181	S10	BP7	1-3/8”		16.33	10.80	5.53	YES	YES		
G60182	S36	EB1	1-3/8”		15.07	10.04	5.03	YES	YES		
G60183	S36	ES83	1-3/8”		22.57	14.29	8.28	YES	YES		
G60184	S36	ES83	1-3/8”		20.07	12.54	7.53	YES	YES		
G60185	EB7	ES36	1-3/8”		22.56	13.78	8.78	YES	NO		
G60186	EB5	ES83	1-3/8”		21.64	13.36	8.28	YES	NO		
G60194	S1	ES69	1-3/8”		14.45	9.42	5.03	YES	NO		
G60196	BP8	ES34	1-3/8”		23.98	14.45	9.53	YES	NO		
G60197	ES104	ES69	1-3/8”		24.14	14.61	9.53	YES	NO		
G60199	ES152	ES153	1-3/8”		23.79	15.01	8.78	YES	YES		
G60204	EB1	EB1	1-3/8”		24.98	14.95	10.03	YES	NO		
G60205	S1	ES34	1-3/8”		13.80	9.52	4.28	YES	YES		
G60206	ES34	ES34	1-3/8”		24.51	14.98	9.53	YES	NO		
G60214	ES82	ES82	1-3/8”		22.48	13.70	8.78	YES	NO		
G60216	S1	ES34	1-3/8”		22.30	13.77	8.53	YES	YES		
G60217	S1	ES34	1-3/8”		23.27	14.24	9.03	YES	YES		
G60218	ES34	ES34	1-3/8”		26.26	15.73	10.53	YES	NO		
G60219	ES69	ES69	1-3/8”		15.48	10.45	5.03	YES	YES		
G60221	S36	BP7	1-3/8”		18.01	13.48	4.53	YES	NO		
G60222	BP8	ES83	1-3/8”		24.98	14.95	10.03	YES	NO		
G60226	EB5	ES24	1-3/8”		21.14	13.36	7.78	YES	YES		
G60232	EB1	EB1	1-3/8”		18.98	11.95	7.03	YES	NO		
G60233	ES18	ES18	1-3/8”		17.98	11.45	6.53	YES	NO		
G60235	EB1	EB1	1-3/8”		27.48	16.20	11.28	YES	NO		
G60237	ES119	S38	1-3/8”		22.18	13.40	8.78	YES	NO		
G60238	S38	S38	1-3/8”		23.06	13.53†	9.53	YES	NO		
G60249	S39	ES83	1-3/8”		18.05	11.27	6.78	YES	NO		
G60250	S10	ES17	1-3/8”		15.89	10.11	5.78	YES	NO		
G60251	ES99	EB2	1-3/8”		19.64	12.36	5.08	YES	NO		
G60253	S1	ES153	1-3/8”		19.04	11.76	7.28	YES	NO		
G60255	ES110	ES19	1-3/8”		22.48	13.70	8.78	YES	NO		
G60257	S6	BP7	1-3/8”		15.39	9.86	5.53	YES	NO		
G60258	S12	ES25	1-3/8”		28.39	16.36	12.03	YES	NO		
G60259	S12	ES26	1-3/8”		15.39	9.86	5.53	YES	NO		
G60260	ES25	ES25	1-3/8”		22.98	13.95	9.03	YES	NO		
G60263	S6	ES22	1-3/8”		21.39	12.86	8.53	YES	NO		
G60264	S10	BP11	1-3/8”		12.27	8.03	4.24	YES	NO		
G60265	BP18	ES24	1-3/8”		19.51	12.23	7.28	YES	NO		
G60269	S12	EB2	1-3/8”		21.05	12.77	8.28	YES	NO		
G60301	S1	BP26	1-3/8”		14.10	9.34	4.76	YES	YES		
G60302	ES126	ES128	1-3/8”		16.48	10.87	5.61	YES	NO		
G60303	S1	ES17	1-3/8”		12.60	8.59	4.01	YES	YES		
G60304	S1	BP8	1-3/8”		14.70	9.34	5.36	YES	NO		
G60305	S1	ES17	1-3/8”		14.95	9.59	5.36	YES	NO		
G60306	S1	ES24	1-3/8”		14.70	9.34	5.36	NO	NO		
G60307	ES2	ES27	1-3/8”		20.45	12.59	7.86	YES	NO		
G60308	EB1	EB1	1-3/8”		20.23	12.37	7.86	YES	NO		
G60309	ES3	ES24	1-3/8”		18.23	11.37	6.86	YES	NO		
G60310	S1	ES17	1-3/8”		14.11	9.00	5.11	YES	NO		
G60312	S29	ES84	1-3/8”		21.15	16.49	4.66	YES	YES		
G60313	S1	BP7	1-3/8”		13.20	8.59	4.61	NO	NO		

* Damping force, in pounds, to either extend or collapse the shock absorber at an average operating velocity.
Fuerza de amortiguación en libras para extender o comprimir el amortiguador a una velocidad de operación promedio.
La puissance d’amortissement en poids de l’amortisseur, soit comprimé, doit détendu, à une vitesse de fonctionnement moyenne.

SPECIFICATIONS BY PART NUMBER
ESPECIFICACIONES POR FIJACIÓN DE EXTREMIDADES
SPÉCIFICATIONS PAR FIXATION DES EXTRÉMITÉS

Gabriel	Mounting Upper	Mounting Lower	Bore	External Diameter Illustration	Lengths Extended	Lengths Collapsed	Stroke	Dust Tube	Recoil Cutoff	Controls * Rebound	Controls * Compression
G60329	EB1	EB1	1-3/8"		22.73	13.87	8.86	YES	YES		
G60330	S36	EB1	1-3/8"		14.72	9.71	5.01	YES	YES		
G60338	S1	BP17	1-3/8"		14.70	9.34	5.36	NO	NO		
G60353			1-3/8"		17.73	11.12	6.61	YES	NO		
G60354	S1	BP7	1-3/8"		14.20	9.09	5.11	NO	NO		
G61112	S6	BP35	1-3/8"		13.73	9.45	4.28	YES	YES		
G61113	EB1	ES83	1-3/8"		22.98	13.95	9.03	YES	NO		
G61114	S6	BP35	1-3/8"		17.95	13.42	4.53	YES	YES		
G61115	EB1	ES83	1-3/8"		26.98	15.95	11.03	YES	NO		
G61116	ES83	ES83	1-3/8"		20.76	12.98	7.78	YES	NO		
G61118	S12	ES25	1-3/8"	C	24.34	14.46	9.88	YES	NO		
G61121	S1	ES113	1-3/8"		18.54	11.76	6.78	YES	YES		
G61122	S1	ES118	1-3/8"		13.89	9.11	4.78	YES	NO		
G61124	S12	BP11	1-3/8"	C	14.59	10.21	4.38	YES	NO		
G61139	S1	EB1	1-3/8"		15.89	10.11	5.78	YES	NO		
G61140	S1	S12	1-3/8"		15.36	10.33	5.03	YES	NO		
G61144	S12		1-3/8"		15.36	10.33	5.03	YES	NO		
G61148	S36	EB1	1-3/8"		15.32	10.29	5.03	YES	NO		
G61149	EB1	ES83	1-3/8"		28.76	16.98	11.78	YES	NO		
G61150		ES83	1-3/8"		22.98	14.20	8.78	YES	NO		
G61151	EB1	ES83	1-3/8"		31.51	18.48	13.03	YES	NO		
G61152	EB1	ES83	1-3/8"		25.48	15.20	11.78	YES	NO		
G61153	ES34	ES36	1-3/8"		22.56	13.78	8.78	YES	NO		
G61154	S39	ES17	1-3/8"		12.23	8.45	3.78	YES	NO		
G61155	S39	EB1	1-3/8"		21.45	13.17	8.28	YES	YES		
G61156	S39		1-3/8"		21.95	13.17	8.78	YES	NO		
G61158	S12	ES60	1-3/8"		15.70	10.92	4.78	YES	NO		
G61159	ES126	ES128	1-3/8"		16.73	10.95	5.17	YES	NO		
630811			1-3/16"		22.45	14.10	8.35	NO	NO		
632147			1-3/16"		22.45	14.10	8.35	NO	NO		
632155	ES36	ES36	1-3/16"		22.45	14.10	8.35	NO	NO		
646155	ES36	ES36	1-3/16"		22.45	14.10	8.35	NO	NO		
665472	ES36	ES36	1-5/8"	G	25.14	15.61	9.53	NO	NO	925	977
665937	ES36	ES36	1-5/8"	G	22.91	16.09	6.82	YES	NO		
83001	ES149	EB1	1-3/8"	A	10.41†	8.36†	3.00	YES	NO	793	363
83002	ES10	ES10	1-3/8"	A	11.61	8.62	3.00	YES	YES	3112	590
83003	S1	BP7	1-3/8"	A	11.76	8.95†	3.4	YES	YES	248	100
83004	ES35	ES136	1"	2" D/T	9.36†	7.29	2.32	YES	YES	539	324
83005	BP8	S10	1-3/16"	2" D/T	7.34	5.87	1.47	YES	NO	858	216
83006	ES149	EB1	1-3/8"	A	10.66	8.48†	2.77	YES	YES	525	182
83007	EB1	EB1	1-3/8"	A	18.54	11.67	6.87	NO	NO	489	343
83008	ES136	ES136	1-3/8"	A	12.98†	10.15†	3.99	YES	YES	699	307
83009	ES149	ES149	1-3/8"	A	10.41†	8.36†	2.99	YES	YES	793	363
83010	ES24	ES24	1"	2" D/T	14.15†	9.33	5.07	YES	YES	188	70
83011	EB1	EB1	1-3/8"	A	11.55†	8.43	3.62	YES	YES	738	330
83012	EB1	EB1	1-3/8"	A	11.05†	8.18	3.37	YES	YES	738	330
83013	BP8	BP8	1-3/16"	2" D/T	7.66	6.63†	1.70	YES	NO	646	480
83014	S1	S1	1-3/8"	A	10.48	7.11	3.37	NO	NO	544	501
83015	BP8	S1	1-3/8"	A	9.79	7.55	2.24	YES	YES	735	430
83016	ES10	ES10	1"	1-5/8"	11.51	8.14	3.37	NO	YES	506	139
83017	ES149	ES149	1-3/8"	A	10.93	8.35†	3.13	YES	YES	353	138
83018	ES24	S1	1-3/8"	A	10.30†	8.42†	3.24	YES	YES	515	174

* Damping force, in pounds, to either extend or collapse the shock absorber at an average operating velocity.
Fuerza de amortiguación en libras para extender o comprimir el amortiguador a una velocidad de operación promedio.
La puissance d'amortissement en poids de l'amortisseur, soit comprimé, doit détendu, à une vitesse de fonctionnement moyenne.

† At bumper contact / Al contacto cone el tope de goma. / Au contact avec le butoir.

SPECIFICATIONS BY PART NUMBER
ESPECIFICACIONES POR FIJACIÓN DE EXTREMIDADES
SPÉCIFICATIONS PAR FIXATION DES EXTRÉMITÉS

Gabriel	Mounting Upper	Mounting Lower	Bore	External Diameter Illustration	Lengths Extended	Lengths Collapsed	Stroke	Dust Tube	Recoil Cutoff	Controls * Rebound	Controls * Compression
83019	ES24	S1	1-3/8"	A	9.42	8.16†	2.28	YES	YES	509	121
83020	ES91	ES91	1-3/8"	A	9.41	7.17	2.24	YES	YES	796	255
83021	ES10	ES10	1-3/8"	A	9.36	7.37	1.99	YES	YES	745	315
83022	ES24	ES24	1"	2" D/T	14.28	9.33	4.95	YES	NO	840	152
83023	ES10		1"	1-5/8"	8.70	7.09†	2.14	NO	YES	484	157
83024	ES10	ES10	1-3/8"	2-1/2" D/T	11.61	8.62	2.99	YES	YES	811	320
83025	ES158	ES158	1-3/8"	A	7.98	6.49	1.49	YES	YES	710	230
83026	ES24	ES24	1-3/8"	A	13.11	9.12	3.99	YES	YES	602	104
83027	ES24	S10	1-3/8"	A	13.80	9.18	4.62	YES	YES	602	104
83028	ES86	ES167	1-3/8"	A	9.94	7.57	2.37	YES	YES	445	531
83029	ES168	ES169	1-5/8"	C	10.35	7.94	2.41	YES	NO	1303	1349
83030	ES136	ES136	1-3/8"	A	9.60†	7.61	2.49	YES	YES	308	87
83031	ES10	ES10	1-3/8"	2-1/2" D/T	11.49	8.62	2.87	YES	YES	811	314
83032	ES163	ES163	1-3/8"	A	7.85	6.36	1.49	NO	YES	779	135
83033	ES53	ES53	1-3/8"	A	13.99	10.37	3.62	YES	YES	494	312
83034	ES115	ES115	1-3/16"	1-5/8"	10.04†	7.32	2.97	NO	YES	430	129
83035	ES166	ES136	1-3/8"	A	12.96†	9.33	4.13	YES	YES	320	100
83038	ES149	EB1	1-3/8"	A	10.41†	8.36†	2.99	YES	YES	336	242
83039	ES149	ES149	1-3/8"	A	10.41†	8.36†	2.99	YES	YES	876	326
83040	ES171	ES172	1-3/8"	A	10.41†	8.36†	2.99	YES	YES	876	326
83041	BP27	S10	1-3/8"	A	10.51†	8.34†	3.02	YES	YES	486	189
83042	ES136	ES136	1-3/8"	A	9.88†	8.44†	2.38	YES	YES	954	541
83100	ES90	ES90	1-3/8"	A	26.60	16.11	10.49	YES	YES	481	142
83101	ES90	ES90	1-3/8"	A	24.60	15.11	9.49	YES	YES	481	142
83102	S21	S21	1-3/8"	A	22.94	13.56	9.38	YES	YES	513	333
83103	S21	S21	1-3/8"	A	19.64	11.89	7.75	YES	YES	517	301
83104	EB3	EB3	1-3/8"	A	28.24	17.12	11.12	YES	NO	698	133
83105	S40	ES160	1-3/8"	A	31.91	18.29	13.62	YES	NO	559	150
83106	S21	S21	1-3/8"	A	29.25	16.76	12.49	YES	NO	451	80
83107	EB2	EB2	1-3/8"	A	31.60	18.36	13.24	YES	NO	352	77
83109	ES36	S42	1-3/8"	A	26.14	15.90	10.24	YES	YES	345	78
83110	ES36	S42	1-3/8"	A	22.89	14.27	8.62	YES	YES	450	143
83111	ES36	S42	1-3/8"	A	26.14	15.90	10.24	YES	YES	560	141
83112	ES36	S42	1-3/8"	A	21.52	13.40	8.12	YES	YES	1064	343
83113	ES36	EB3	1-3/8"	A	20.42	13.43	6.99	YES	YES	997	238
83114	S40	ES35	1-3/8"	A	23.00	13.76	9.24	YES	NO	450	102
83115	ES36	EB3	1-3/8"	A	16.19	13.32	4.87	YES	YES	997	238
83116	ES164	ES165	1-3/8"	A	23.81	14.68	9.12	YES	NO	354	300
83117	EB4	EB1	1-3/8"	A	23.94	14.45	9.49	YES	NO	354	300
83118	ES164	ES90	1-3/8"	A	24.45	14.71	9.74	YES	NO	410	311
83119	EB4	ES165	1-3/8"	A	23.96	14.84	9.12	YES	NO	354	300
83120	ES120	S21	1-3/8"	A	22.12	13.63	8.49	YES	YES	779	164
83121	ES36	ES36	1-3/8"	A	30.25	18.32	11.93	YES	YES	689	126
83122	ES36	ES36	1-3/8"	A	25.24	15.75	9.49	YES	YES	661	201
83123	ES36	ES36	1-3/8"	A	26.62	16.38	10.24	YES	YES	589	119
83124	ES36	ES36	1-3/8"	A	21.65	13.75	7.87	YES	YES	750	137
83125	ES36	ES36	1-3/8"	A	28.12	17.13	10.99	YES	YES	625	115
83126	ES36	ES36	1-3/8"	A	24.37	15.25	9.12	YES	YES	625	115
83127	ES36	ES36	1-3/8"	A	20.12	13.13	6.99	YES	YES	940	218
83128	ES36	ES36	1-3/8"	A	16.87	11.51	5.37	YES	YES	940	218
83130	ES36	ES36	1-3/8"	A	17.99	12.01	5.99	YES	YES	871	177
83131	ES83	ES83	1-3/8"	A	27.80	18.18	9.62	YES	NO	212	129

* Damping force, in pounds, to either extend or collapse the shock absorber at an average operating velocity.
Fuerza de amortiguación en libras para extender o comprimir el amortiguador a una velocidad de operación promedio.
La puissance d'amortissement en poids de l'amortisseur, soit comprimé, doit détendu, à une vitesse de fonctionnement moyenne.

† At bumper contact / Al contacto cone el tope de goma. / Au contact avec le butoir.

SPECIFICATIONS BY PART NUMBER
ESPECIFICACIONES POR FIJACIÓN DE EXTREMIDADES
SPÉCIFICATIONS PAR FIXATION DES EXTRÉMITÉS

Gabriel	Mounting Upper	Mounting Lower	Bore	External Diameter Illustration	Lengths Extended	Lengths Collapsed	Stroke	Dust Tube	Recoil Cutoff	Controls * Rebound	Controls * Compression
83132	EB3	EB3	1-3/8”	A	25.24	15.50	9.74	YES	NO	828	150
83134	S21	ES36	1-3/8”	A	22.24	13.50	8.74	YES	NO	430	49
83135	ES90	ES90	1-3/8”	A	19.48	12.36	7.12	YES	YES	519	121
83136	S21	S21	1-3/8”	A	29.25	16.76	12.49	YES	NO	914	65
83137	ES36	ES36	1-3/8”	A	30.03	17.78	12.25	YES	YES	517	132
83138	ES36	S42	1-3/8”	A	23.55	14.42	9.12	YES	YES	997	231
83140	EB3	EB3	1-3/8”	A	25.27	15.52	9.75	YES	NO	738	88
83141	EB3	EB3	1-3/8”	A	25.27	15.52	9.75	YES	NO	408	113
83142	ES162	S42	1-3/8”	A	23.92	14.5	9.43	YES	YES	367	131
83143	ES162	S42	1-3/8”	A	21.92	13.5	8.43	YES	YES	403	137
83144	ES36	ES36	1-3/8”	A	23.78	15.03	8.75	YES	YES	596	93
83200	EB2	EB2	1-3/8”	A	24.51	14.98	9.53	YES	NO	806	370
83203	ES36	ES36	1-3/8”	A	17.10	11.36	5.74	YES	YES	609	114
83204	ES36	ES36	1-3/8”	A	20.14	12.86	7.28	YES	YES	451	110
83205	ES36	ES36	1-3/8”	A	29.69	17.69	12.00	YES	YES	660	76
83207	ES36	ES36	1-3/8”	A	21.64	13.61	8.03	YES	YES	553	143
83209	ES36	ES36	1-3/8”	A	29.64	17.61	12.03	YES	YES	670	78
83214	EB3	EB3	1-3/8”	A	19.64	12.86	6.78	YES	NO	269	90
83215	EB3	EB3	1-3/8”	A	26.64	16.36	10.28	YES	NO	661	125
83216	EB2	EB2	1-3/8”	A	23.51	14.48	9.03	YES	NO	776	262
83217	EB3	EB3	1-3/8”	A	22.77	14.49	8.28	YES	YES	539	202
83218	ES36	ES36	1-3/8”	A	25.19	15.44	9.75	YES	YES	721	194
83219	EB2	EB2	1-3/8”	A	20.01	12.73	7.28	YES	NO	299	125
83221	ES36	ES36	1-3/8”	A	24.01	14.73	9.28	YES	NO	599	153
83225	EB3	EB3	1-3/8”	A	24.14	15.11	9.03	YES	YES	482	159
83242	ES36	ES36	1-3/8”	A	33.73	20.98	12.75	YES	YES	721	135
83301	S16	ES90	1-3/8”	B	24.52	14.74	9.78	YES	YES	653	86
83303	EB7	ES36	1-3/8”	B	24.86	15.08	9.78	YES	NO	470	122
83304	EB7	ES36	1-3/8”	B	22.86	14.08	8.78	YES	NO	470	122
83308	EB2	EB2	1-3/8”	B	25.14	15.36	9.78	YES	YES	445	180
83309	EB2	EB2	1-3/8”	B	28.64	17.11	11.53	YES	YES	589	135
83310	ES36	ES36	1-3/8”	B	24.06	14.69	9.37	YES	NO	559	153
83312	EB2	EB2	1-3/8”	B	26.64	16.11	10.53	YES	YES	527	152
83314	EB2	EB2	1-3/8”	B	30.64	18.11	12.53	YES	YES	633	143
83317	S16	ES23	1-3/8”	B	27.33	15.99	11.34	YES	NO		
83318	S16	S16	1-3/8”	B	22.53	13.50	9.03	YES	NO	323	77
83353	EB3	S21	1-3/8”	B	24.84	15.06	9.78	YES	NO	432	214
83362	EB3	EB3	1-3/8”	B	27.00	16.25	10.75	YES	NO	539	202
83400	S1	S1	1-3/16”	F	22.02	12.82	9.20	YES	NO	301	120
83401	EB1	EB1	1-3/16”	F	24.09	14.26	9.83	YES	NO	341	252
83456	S21	S21	1-3/8”	B	24.03	14.25	9.78	YES	NO	566	80
83613	S16	S16	1-3/8”	A	21.04	12.76	8.28	YES			
83634	ES120	ES120	1-3/8”	A	27.48	16.23	11.25	YES	YES	779	157
83635	ES36	S21	1-3/8”	A	21.74	13.25	8.49	YES	NO	558	119
83636	ES90	ES90	1-3/8”	A	27.72	16.95	10.77	YES	YES	505	148
85000	ES36	ES36	1-5/8”	C	17.22	11.46	5.76	YES	YES	1019	219
85001	EB3	EB3	1-5/8”	C	26.27	16.36	9.91	YES	NO	1202	186
85003	ES90	ES90	1-5/8”	C	25.37	15.59	9.78	YES	YES	437	182
85004	EB3	EB3	1-5/8”	C	20.68	13.67	7.01	YES	YES	1019	219
85005	ES36	ES36	1-5/8”	C	24.74	15.21	9.53	YES	YES	1019	219
85006	ES36	ES36	1-5/8”	C	28.50	17.09	11.41	YES	YES	1019	219
85007	EB3	EB3	1-5/8”	C	24.21	15.30	8.91	YES	YES	1008	171

* Damping force, in pounds, to either extend or collapse the shock absorber at an average operating velocity.
Fuerza de amortiguación en libras para extender o comprimir el amortiguador a una velocidad de operación promedio.
La puissance d’amortissement en poids de l’amortisseur, soit comprimé, doit détendu, à une vitesse de fonctionnement moyenne.

SPECIFICATIONS BY PART NUMBER
ESPECIFICACIONES POR FIJACIÓN DE EXTREMIDADES
SPÉCIFICATIONS PAR FIXATION DES EXTRÉMITÉS

Gabriel	Mounting Upper	Mounting Lower	Bore	External Diameter Illustration	Lengths Extended	Lengths Collapsed	Stroke	Dust Tube	Recoil Cutoff	Controls * Rebound	Controls * Compression
85009	S21	ES36	1-5/8"	C	23.52	14.36	9.16	YES	YES	857	144
85010	ES36	ES36	1-5/8"	C	26.74	16.21	10.53	YES	YES	1019	219
85011	ES120	ES121	1-5/8"	C	27.49	16.46	11.03	YES	NO	1268	186
85012	EB2	EB2	1-5/8"	C	21.00	13..22	7.78	YES	NO	523	199
85013	ES36	ES36	1-5/8"	C	29.74	17.71	12.03	YES	YES	1019	219
85014	ES36	ES36	1-5/8"	C	21.74	13.71	8.03	YES	YES	1019	219
85023	EB2	EB2	1-5/8"	C	20.24	12.96	7.28	YES	YES	1008	539
85024	EB2	EB2	1-5/8"	C	28.74	17.21	11.53	YES	YES	1008	539
85025	EB2	S21	1-5/8"	C	23.00	13.97	9.03	YES	NO	1079	539
85026	ES136	S21	1-5/8"	C	23.00	13.97	9.03	YES	NO	1079	539
85027	S21	S21	1-5/8"	C	21.52	12.99	8.53	YES	NO	1008	539
85029	ES36	ES36	1-5/8"	C	20.50	13.09	7.41	YES	YES	1019	219
85030	ES36	ES36	1-5/8"	C	24.00	14.84	9.16	YES	YES	1019	219
85031	ES176	EB2	1-5/8"	C	25.63	15.85	9.78	YES	NO	941	257
85033	S21	EB3	1-5/8"	C	27.21	17.37	9.84	YES	YES	764	254
85036	ES36	ES36	1-5/8"	C	26.38	16.29	10.09	YES	YES	633	119
85040	EB3	EB3	1-5/8"	C	30.90	18.49	12.41	YES	NO	889	114
85042	EB3	EB3	1-5/8"	C	20.64	13.61	7.03	YES	YES	333	161
85043	ES36	ES36	1-5/8"	C	27.63	16.85	10.78	YES	YES	628	163
85044	ES36	ES36	1-5/8"	C	22.63	14.10	8.53	YES	NO	722	212
85045	ES36	ES36	1-5/8"	C	14.51	10.10	4.41	YES	YES	1020	219
85046	EB2	EB2	1-5/8"	C	27.51	16.60	10.91	YES	YES	1008	539
85047	EB2	EB2	1-5/8"	C	25.25	15.47	9.78	YES	YES	1008	539
85048	S21	S21	1-5/8"	C	29.16	16.88	12.28	YES	NO	432	106
85049	S21	S21	1-5/8"	C	25.53	15.00	10.53	YES	NO	597	107
85050	ES36	ES36	1-5/8"	C	23.50	14.47	9.03	YES	NO	525	138
85051	ES36	ES36	1-5/8"	C	18.75	12.22	6.53	YES	YES	1019	139
85052	ES36	ES36	1-5/8"	C	13.25	9.47	3.78	YES	YES	1019	139
85053	EB3	EB3	1-5/8"	C	24.65	15.49	9.16	YES	NO	1019	227
85054	EB2	EB2	1-5/8"	C	23.26	14.35	8.91	YES	NO	602	104
85055	EB2	EB2	1-5/8"	C	25.63	15.60	10.03	YES	NO	577	102
85056	S21	ES36	1-5/8"	C	20.15	12.87	7.28	YES	YES	732	114
85057	ES36	EB3	1-5/8"	C	21.45	14.23	7.22	YES	YES	1216	115
85058	ES36	ES36	1-5/8"	C	22.63	14.22	8.41	YES	YES	722	114
85059	ES36	EB3	1-5/8"	C	19.07	12.79	6.28	YES	YES	928	151
85060	ES36	ES36	1-5/8"	C	19.75	12.72	7.03	YES	YES	943	405
85061	ES161	ES162	1-5/8"	C	24.75	15.22	9.53	YES	YES	1216	195
85062	EB2	EB2	1-5/8"	C	19.76	12.60	7.20	YES	NO	523	199
85063	EB2	EB2	1-5/8"	C	32.01	18.85	13.16	YES	NO	762	174
85064	ES36	ES36	1-5/8"	C	16.01	10.72	5.28	YES	YES	1481	340
85065	ES161	S21	1-5/8"	C	28.02	16.99	11.03	YES	YES	1059	300
85066	ES161	ES162	1-5/8"	C	24.63	15.22	9.41	YES	YES	812	322
85067	ES174	ES136	1-5/8"	C	30.51	18.10	12.41	YES	YES	676	170
85069	S21	S21	1-5/8"	C	26.28	15.94	10.34	YES	YES	762	255
85070	ES174	EB3	1-5/8"	C	25.60	15.82	9.78	YES	NO	1100	310
85071	S21	S21	1-5/8"	C	25.57	15.04	10.53	YES	NO	610	107
85072	ES36	ES176	1-5/8"	C	24.17	14.83	9.34	YES	YES	1387	305
85300	EB3	EB3	1-5/8"	D	18.00	12.22	5.78	YES	YES	1435	676
85301	EB3	EB3	1-5/8"	D	31.92	19.03	12.89	YES	NO	1442	455
85302	EB3	EB3	1-5/8"	D	22.75	14.66	8.09	YES	NO	836	253
85303	EB3	EB3	1-5/8"	D	24.75	15.47	9.28	YES	NO	1019	221
85304	EB3	EB3	1-5/8"	D	22.25	14.22	8.03	YES	NO	767	325

* Damping force, in pounds, to either extend or collapse the shock absorber at an average operating velocity.
Fuerza de amortiguación en libras para extender o comprimir el amortiguador a una velocidad de operación promedio.
La puissance d'amortissement en poids de l'amortisseur, soit comprimé, doit détendu, à une vitesse de fonctionnement moyenne.

SPECIFICATIONS BY PART NUMBER
ESPECIFICACIONES POR FIJACIÓN DE EXTREMIDADES
SPÉCIFICATIONS PAR FIXATION DES EXTRÉMITÉS

Gabriel	Mounting Upper	Mounting Lower	Bore	External Diameter Illustration	Lengths Extended	Lengths Collapsed	Stroke	Dust Tube	Recoil Cutoff	Controls * Rebound	Controls * Compression
85305	EB3	EB3	1-5/8”	D	27.25	16.72	10.53	YES	NO	1120	225
85307	EB3	EB3	1-5/8”	D	24.01	15.10	8.91	YES	NO	1094	173
85308	EB3	EB3	1-5/8”	D	25.13	15.85	9.28	YES	YES	764	254
85310	S42	S42	1-5/8”	D	18.65	11.74	6.91	YES	YES	1379	578
85311	S21	EB3	1-5/8”	D	23.95	14.79	9.16	YES	YES	764	254
85312	EB3	S21	1-5/8”	D	23.69	14.85	8.84	YES	YES	717	111
85313	EB3	EB3	1-5/8”	D	26.26	16.35	9.91	YES	YES	717	111
85314	EB3	EB3	1-5/8”	D	26.50	16.47	10.03	YES	YES	1216	169
85315	EB3	EB3	1-5/8”	D	29.66	18.15	11.51	YES	NO	380	142
85316	S21	ES36	1-5/8”	D	20.61	12.85	7.76	YES	NO	943	443
85317	S21	EB3	1-5/8”	D	27.18	17.42	9.76	YES	YES	764	254
85318	S21	S21	1-5/8”	D	27.37	16.36	11.01	YES	YES	1372	192
85319	S21	ES150	1-5/8”	D	22.20	13.92	8.28	YES	YES	988	454
85320	EB3	EB3	1-5/8”	D	26.13	16.35	9.78	YES	NO	970	308
85321	ES36	ES36	1-5/8”	D	25.36	15.58	9.78	YES	YES	1435	676
85322	EB3	ES160	1-5/8”	D	15.26	11.85	3.41	YES	YES	764	162
85323	ES36	ES36	1-5/8”	D	17.36	11.58	5.78	YES	YES	1085	163
85324	S21	S21	1-5/8”	D	22.14	13.61	8.53	YES	NO	579	114
85325	S21	S21	1-5/8”	D	23.64	14.36	9.28	YES	NO	1024	240
85326	S21	S21	1-5/8”	D	19.64	12.36	7.28	YES	NO	799	142
85327	EB3	ES160	1-5/8”	D	16.01	12.10	3.91	YES	YES	764	162
85328	S21	S21	1-5/8”	D	25.64	15.36	10.28	YES	NO	930	383
85329	EB3	EB3	1-5/8”	D	24.50	15.47	9.03	YES	YES	1550	232
85330	EB3	S21	1-5/8”	D	22.44	14.16	8.28	YES	YES	1140	176
85331	ES158	ES159	1-5/8”	D	19.66	12.88	6.78	YES	YES	1757	396
85332	S42	ES36	1-5/8”	D	20.64	12.98	7.66	YES	YES	2351	967
85333	S42	ES36	1-5/8”	D	20.64	12.98	7.66	YES	YES	1241	534
85334	EB3	EB3	1-5/8”	D	14.50	10.47	4.03	YES	YES	1271	319
85335	ES158	ES159	1-5/8”	D	19.66	12.88	6.78	YES	YES	827	107
85336	S21	S21	1-5/8”	D	18.76	11.86	6.90	YES	NO	861	200
85337	ES36	ES36	1-5/8”	D	28.72	17.45	11.28	YES	YES	1318	374
85338	ES36	ES36	1-5/8”	D	19.47	12.7	6.77	YES	YES	1664	420
85376	EB3	EB3	1-5/8”	D	33.25	19.72	13.53	YES	NO	668	134
85700	EB3	EB3	1-5/8”	D	26.13	16.60	9.53	YES	YES	1446	328
85701	S21	S21	1-5/8”	D	15.64	10.36	5.28	YES	YES	914	204
85702	EB3	EB3	1-5/8”	D	23.76	15.85	7.91	YES	YES	1093	825
85703	S21	EB3	1-5/8”	D	29.57	18.54	11.03	YES	YES	1435	186
85704	EB3	EB3	1-5/8”	D	28.75	18.72	10.03	YES	YES	1435	186
85705	S21	S21	1-5/8”	D	23.65	14.24	9.41	YES	YES	639	436
85706	S21	S21	1-5/8”	D	23.65	14.24	9.41	YES	YES	1086	696
85707	S21	S21	1-5/8”	D	23.65	14.40	9.25	YES	YES	1761	986
85708	S21	S21	1-5/8”	D	20.64	12.86	7.78	YES	YES	914	204
85709	S21	S21	1-5/8”	D	31.64	18.36	13.28	YES	YES	700	203
85710	S21	EB3	1-5/8”	D	23.45	15.10	8.34	YES	YES	994	248
85711	S21	EB3	1-5/8”	D	24.57	15.29	9.28	YES	YES	1435	208
85712	EB3	EB3	1-5/8”	D	20.50	13.47	7.03	YES	YES	1435	562
85713	EB3	EB3	1-5/8”	D	24.50	15.47	9.03	YES	YES	1157	180
85714	EB3	EB3	1-5/8”	D	25.13	15.85	9.28	YES	YES	1220	175
85715	EB3	EB3	1-5/8”	D	25.13	15.85	9.28	YES	YES	1915	200
85716	EB3	EB3	1-5/8”	D	22.01	14.35	7.66	YES	YES	1220	175
85717	EB3	EB3	1-5/8”	D	25.13	15.85	9.28	YES	YES	1915	200
85718	EB3	EB3	1-5/8”	D	22.13	15.04	7.09	YES	YES	2506	206

* Damping force, in pounds, to either extend or collapse the shock absorber at an average operating velocity.
Fuerza de amortiguación en libras para extender o comprimir el amortiguador a una velocidad de operación promedio.
La puissance d’amortissement en poids de l’amortisseur, soit comprimé, doit détendu, à une vitesse de fonctionnement moyenne.

SPECIFICATIONS BY PART NUMBER
ESPECIFICACIONES POR FIJACIÓN DE EXTREMIDADES
SPÉCIFICATIONS PAR FIXATION DES EXTRÉMITÉS

Gabriel	Mounting Upper	Mounting Lower	Bore	External Diameter Illustration	Lengths Extended	Lengths Collapsed	Stroke	Dust Tube	Recoil Cutoff	Controls * Rebound	Controls * Compression
85719	EB3	EB3	1-5/8"	D	17.25	11.97	5.28	YES	YES	1517	213
85720	EB3	EB3	1-5/8"	D	20.50	13.47	7.03	YES	YES	1435	562
85722	S21	S21	1-5/8"	D	27.15	16.43	10.72	YES	YES	1264	369
85723	EB3	S21	1-5/8"	D	19.94	12.91	7.03	YES	YES	1318	248
85724	ES158	ES159	1-5/8"	D	22.78	14.50	8.28	YES	YES	1235	454
85727	S21	S21	1-5/8"	D	29.89	17.36	12.53	YES	YES	783	111
85728	S21	S21	1-5/8"	D	24.39	14.86	9.53	YES	YES	1435	510
85729	EB3	S21	1-5/8"	D	21.58	13.80	7.78	YES	YES	783	111
85730	EB3	EB3	1-5/8"	D	30.75	18.72	12.03	YES	YES	1517	293
85731	S21	EB3	1-5/8"	D	30.57	18.54	12.03	YES	YES	1517	293
85732	EB3	EB3	2-1/16"	E	22.13	15.11	7.03	YES	YES	2632	382
85733	EB3	S21	1-5/8"	D	23.57	14.73	8.84	YES	YES	717	111
85734	EB3	EB3	1-5/8"	D	20.74	13.71	7.03	YES	YES	1288	227
85735	EB3	EB3	1-5/8"	D	26.74	16.71	10.03	YES	YES	1288	227
85736	EB3	EB3	1-5/8"	D	23.62	15.21	8.41	YES	YES	1155	352
85737	ES173	ES173	1-5/8"	D	15.11	10.84	4.27	YES	YES	3066	782
85738	ES36	ES36	1-5/8"	D	17.47	11.7	5.77	YES	YES	1830	416
85900	S21	S21	1-5/8"	G	17.27	11.16	6.11	YES	YES	1467	337
85901	EB3	EB3	1-5/8"	G	29.05	17.64	11.41	YES	NO	1830	418
85902	S21	S21	1-5/8"	G	19.01	12.03	6.98	YES	YES	1441	267
85903	ES36	ES36	1-5/8"	G	31.99	19.13	12.86	YES	YES	666	113
85904	ES36	ES36	1-5/8"	G	27.61	16.88	10.73	YES	YES	666	113
85905	ES36	EB3	1-5/8"	G	23.81	16.16	7.66	YES	YES	1020	219
85906	ES36	ES36	1-5/8"	G	21.73	14.00	7.73	YES	YES	700	255
85907	ES36	EB3	1-5/8"	G	21.43	14.20	7.23	YES	YES	1216	251
85908	ES36	ES36	1-5/8"	G	18.48	12.25	6.23	YES	YES	1020	219
85909	ES36	ES36	1-5/8"	G	24.24	15.13	9.11	YES	YES	700	255
85910	ES36	ES36	1-5/8"	G	20.73	13.50	7.23	YES	YES	1074	219
85911	ES36	ES36	1-5/8"	G	16.86	11.50	5.36	YES	YES	1020	219
85912	EB3	ES36	1-5/8"	G	18.68	12.57	6.11	YES	YES	1020	219
85913	ES36	EB3	1-5/8"	G	22.56	15.20	7.36	YES	YES	1020	219
85914	ES36	ES36	1-5/8"	G	14.36	10.25	4.11	YES	YES	1020	219
85915	ES36	EB3	1-5/8"	G	19.06	12.70	6.36	YES	YES	1020	219
85916	ES36	EB3	1-5/8"	G	24.61	15.51	9.11	YES	YES	1149	219
85918	ES150	ES150	1-5/8"	G	22.96	14.55	8.41	YES	NO	1726	412
85919	ES36	ES36	1-5/8"	G	22.48	14.25	8.23	YES	YES	1265	121
85920	ES150	ES150	1-5/8"	G	21.19	13.53	7.66	YES	NO	845	49
85921	S21	ES36	1-5/8"	G	22.03	13.50	8.53	YES	NO	2053	339
85922	ES150	ES150	1-5/8"	G	21.19	13.53	7.66	YES	NO	878	185
85923	ES177	ES161	1-5/8"	G	22.48	14.50	7.98	YES	YES	1940	221
85924	ES90	ES36	1-5/8"	G	20.41	12.96	7.46	YES	NO	1036	122
85925	ES90	ES90	1-5/8"	G	22.54	15.59	6.96	YES	NO	761	144
85926	ES90	ES90	1-5/8"	G	26.48	17.96	8.53	YES	YES	1387	279
85927	ES90	ES90	1-5/8"	G	24.74	15.38	9.36	YES	YES	1288	388
85928	ES90	ES90	1-5/8"	G	20.28	13.21	7.08	YES	NO	957	229
85929	ES90	ES90	1-5/8"	G	20.28	13.21	7.08	YES	NO	2214	267
85930	ES177	ES161	1-5/8"	G	17.86	12.00	5.86	YES	YES	1617	342
85931	ES177	ES161	1-5/8"	G	22.48	14.50	7.98	YES	YES	1435	220
85932	ES178	ES150	1-5/8"	G	21.23	13.62	7.61	YES	YES	1102	430
85933	ES175	ES175	1-5/8"	G	18.23	12.71	5.52	YES	YES	1089	383
85934	ES36	ES36	1-5/8"	G	17.73	12.00	5.73	YES	YES	3511	1063
85935	S21	ES36	1-5/8"	G	18.70	11.92	6.78	YES	NO	1054	419

* Damping force, in pounds, to either extend or collapse the shock absorber at an average operating velocity.
Fuerza de amortiguación en libras para extender o comprimir el amortiguador a una velocidad de operación promedio.
La puissance d'amortissement en poids de l'amortisseur, soit comprimé, doit détendu, à une vitesse de fonctionnement moyenne.

SPECIFICATIONS BY PART NUMBER
ESPECIFICACIONES POR FIJACIÓN DE EXTREMIDADES
SPÉCIFICATIONS PAR FIXATION DES EXTRÉMITÉS

Gabriel	Mounting Upper	Mounting Lower	Bore	External Diameter Illustration	Lengths Extended	Lengths Collapsed	Stroke	Dust Tube	Recoil Cutoff	Controls * Rebound	Controls * Compression
85936	ES174	S43	1-5/8”	G	17.23	11.38	5.85	YES	YES	1479	337
85937	ES174	S43	1-5/8”	G	18.98	12.26	6.72	YES	YES	1479	337
85938	ES36	ES36	1-5/8”	G	16.06	10.78	5.28	YES	YES	1581	432
85939	ES36	ES36	1-5/8”	G	14.44	10.03	4.41	YES	YES	1719	420
87000	S21	EB3	2-1/16”	E	24.46	15.21	9.25	YES	YES	1332	300
87001	EB3	EB3	2-1/16”	E	20.76	13.76	7.00	YES	YES	1158	190
87002	EB3	EB3	2-1/16”	E	23.5	15.41	8.09	YES	YES	879	203
87003	EB3	EB3	2-1/16”	E	26.26	16.51	9.75	YES	YES	1332	395
87004	EB3	EB3	2-1/16”	E	26.76	16.76	10.00	YES	YES	1158	190
87006	EB3	EB3	2-1/16”	E	23.75	15.25	8.50	YES	YES	1158	272
87011	S21	S21	2-1/16”	E	23.65	14.40	9.25	YES	YES	1750	1050
87012	S21	S21	2-1/16”	E	23.65	14.40	9.25	YES	YES	650	364
87013	S21	S21	2-1/16”	E	23.65	14.40	9.25	YES	YES	1075	585
87015	ES173	ES173	45MM	E	15.51	11.18	4.33	YES	YES	4950	900
89401	EB2	EB2	1-5/8”	G	28.41	17.16	11.25	YES	NO	665‡	194‡
89402	EB2	EB2	1-5/8”	G	24.41	15.16	9.25	YES	NO	874‡	206‡
89403	EB2	EB2	1-5/8”	G	26.86	17.16	9.70	YES	YES	929‡	281‡
89405	ES36	ES36	1-5/8”	G	26.24	16.41	9.83	YES	YES	1009‡	249‡
89406	ES36	ES36	1-5/8”	G	24.74	15.66	9.08	YES	YES	658‡	125‡
89407	ES36	ES36	1-5/8”	G	21.62	14.04	7.58	YES	YES	652‡	218‡
89408	EB2	EB2	1-5/8”	G	19.67	12.79	6.88	YES	NO	536‡	201‡
89409	EB2	EB2	1-5/8”	G	26.36	16.41	9.95	YES	YES	567‡	165‡
89410	EB3	EB3	1-5/8”	G	26.33	16.42	9.91	YES	NO	1185‡	182‡
89411	ES90	ES90	1-5/8”	G	25.36	15.59	9.78	YES	YES	436‡	186‡
89412	EB3	EB3	1-5/8”	G	24.26	15.68	8.58	YES	YES	1155‡	169‡
89413	EB2	EB2	1-5/8”	G	20.91	13.41	7.50	YES	NO	536‡	201‡
89414	ES36	ES36	1-5/8”	G	29.62	18.04	11.58	YES	YES	1045‡	217‡
89415	EB2	EB2	1-5/8”	G	20.12	13.29	6.83	YES	YES	1155‡	514‡
89416	EB2	EB2	1-5/8”	G	28.62	17.54	11.08	YES	YES	1155‡	514‡
89417	ES136	S21	1-5/8”	G	22.93	14.18	8.75	YES	NO	1226‡	515‡
89418	S21	S21	1-5/8”	G	21.44	13.19	8.25	YES	NO	1266‡	515‡
89419	EB3	EB3	1-5/8”	G	18.00	12.55	5.45	YES	YES	1352‡	636‡
89420	EB3	EB3	1-5/8”	G	22.81	14.68	8.13	YES	NO	862‡	258‡
89422	EB3	EB3	1-5/8”	G	25.13	16.18	8.95	YES	YES	794‡	253‡
89423	S21	S21	1-5/8”	G	18.65	12.07	6.58	YES	YES	1352‡	573‡
89424	S21	EB3	1-5/8”	G	23.70	15.00	8.70	YES	YES	794‡	253‡
89425	EB3	EB3	1-5/8”	G	26.50	16.80	9.70	YES	YES	1352‡	167‡
89426	S21	ES36	1-5/8”	G	20.43	12.93	7.50	YES	NO	926‡	419‡
89427	S21	EB3	1-5/8”	G	27.20	17.50	9.70	YES	YES	794‡	253‡
89428	S21	ES150	1-5/8”	G	21.96	14.13	7.83	YES	YES	958‡	446‡
89429	EB3	EB3	1-5/8”	G	26.18	16.43	9.75	YES	NO	553‡	266‡
89430	ES36	ES36	1-5/8”	G	24.74	15.54	9.53	YES	YES	1462‡	279‡
89431	ES36	ES36	1-5/8”	G	22.41	14.16	8.25	YES	NO	751‡	211‡
89432	ES36	ES36	1-5/8”	G	23.41	14.66	8.75	YES	NO	1507‡	561‡
89434	EB2	EB2	1-5/8”	G	27.12	16.79	10.33	YES	YES	1155‡	514‡
89435	EB2	EB2	1-5/8”	G	24.86	15.66	9.20	YES	YES	1155‡	514‡
89436	ES36	ES36	1-5/8”	G	17.24	11.91	5.33	YES	YES	998‡	217‡
89437	ES36	ES36	1-5/8”	G	20.12	13.29	6.83	YES	YES	1155‡	514‡
89438	EB2	EB2	1-5/8”	G	23.17	14.54	8.63	YES	NO	583‡	103‡
89439	EB2	EB2	1-5/8”	G	25.67	15.79	9.88	YES	NO	518‡	103‡
89440	ES36	ES36	1-5/8”	G	23.86	15.16	8.70	YES	YES	1498‡	561‡
89441	S21	ES36	1-5/8”	G	20.14	13.06	7.08	YES	YES	761‡	126‡

* Damping force, in pounds, to either extend or collapse the shock absorber at an average operating velocity.
Fuerza de amortiguación en libras para extender o comprimir el amortiguador a una velocidad de operación promedio.
La puissance d’amortissement en poids de l’amortisseur, soit comprimé, doit détendu, à une vitesse de fonctionnement moyenne.

‡ For GasSLX Series, forces are at the “Firm” (F) setting. / Para la serie Gas SLX, fas fuerzas estan adjustada en (F) “Firme”. / Pour la série GasSLX, le réglage de la force est sur « Ferme » (F).

SPECIFICATIONS BY PART NUMBER
ESPECIFICACIONES POR FIJACIÓN DE EXTREMIDADES
SPÉCIFICATIONS PAR FIXATION DES EXTRÉMITÉS

Gabriel	Mounting Upper	Mounting Lower	Bore	External Diameter Illustration	Lengths Extended	Lengths Collapsed	Stroke	Dust Tube	Recoil Cutoff	Controls * Rebound	Controls * Compression
89442	EB3	EB3	1-5/8"	G	24.55	15.55	9.00	YES	NO	1055‡	224‡
89443	ES158	ES159	1-5/8"	G	22.17	14.31	7.86	YES	YES	1206‡	466‡
89446	EB2	EB2	1-5/8"	G	28.36	17.41	10.95	YES	YES	702‡	204‡
89447	S21	S21	1-5/8"	G	23.65	14.57	9.08	YES	YES	702‡	241‡
89448	ES161	ES162	1-5/8"	G	24.62	15.54	9.08	YES	YES	782‡	323‡
89449	ES150	ES150	1-5/8"	G	23.09	14.71	8.38	YES	NO	1519‡	324‡
89450	ES161	ES162	1-5/8"	G	24.62	15.54	9.08	YES	YES	1282‡	193‡
89451	ES174	ES136	1-5/8"	G	30.36	18.41	11.95	YES	YES	645‡	172‡
89453	ES178	ES150	1-5/8"	G	21.10	13.78	7.32	YES	YES	860‡	435‡
89454	ES175	ES175	1-5/8"	G	18.23	12.78	5.45	YES	YES	938‡	388‡
89455	S21	S21	1-5/8"	G	26.28	15.92	10.36	YES	YES	791‡	276‡
89456	ES174	S43	1-5/8"	G	17.02	11.29	5.73	YES	YES	975‡	377‡

* Damping force, in pounds, to either extend or collapse the shock absorber at an average operating velocity.
Fuerza de amortiguación en libras para extender o comprimir el amortiguador a una velocidad de operación promedio.
La puissance d'amortissement en poids de l'amortisseur, soit comprimé, doit détendu, à une vitesse de fonctionnement moyenne.

‡ For GasSLX Series, forces are at the "Firm" (F) setting. / Para la serie Gas SLX, fas fuerzas estan adjustada en (F) "Firme". / Pour la série GasSLX, le réglage de la force est sur « Ferme » (F).

MOUNTING ACCESSORY PACKAGES AND COMPONENT PARTS

PAQUETES DE ACCESORIOS DE MONTAJE Y PIEZAS COMPONENTES

ENSEMBLES D'ACCESSOIRES DE MONTURES ET DE PIÈCES DÉTACHÉES

140126			
141617	1	Hex nut / Tuerca hexagonal / Écrou hexagonal	3/8 in.-24 thread
141627	2	Retainer / Seguro / Arrêt	3/8 in. I.D. x 1-1/2 in. O.D. x .093 in. thick
	2	Bushing / Anillo / Bague	7/8 in. centering lip for 3/8 in. O.D. stud
140149			
401011	4	Bushing / Anillo / Bague	2 pc. for 1-3/4 in. O.D. eye ring- 3/4" diam. stud
140169			
401011	2	Bushing / Anillo / Bague	2 pc. for 1-3/4 in. O.D. eye ring- 3/4" diam. stud
140357			
141619	1	Hex nut / Tuerca hexagonal / Écrou hexagonal	1/2 in.-20 thread
141620	1	Lock washer / Arandela de freno / Rondelle-frein	1/2 in. I.D. (thin)
141621	1	Hex nut / Tuerca hexagonal / Écrou hexagonal	5/8 in.-18 thread
141623	1	Lock washer / Arandela de freno / Rondelle-frein	5/8 in. I.D. (thin)
	1	Retainer / Seguro / Arrêt	5/8 in. I.D. x 1-1/4 in. O.D. x .074 in. thick
	1	Retainer / Seguro / Arrêt	1/2 in. I.D. x 1-1/4 in. O.D. x .084 in. thick
	1	Stud / Pasador / Goujon	1/2 in. -20 and 5/8 in. -18 thread
140455			
141614	2	Bushing / Anillo / Bague	5/8 in. centering lip for 3/8 in. O.D. stud
141617	1	Hex nut / Tuerca hexagonal / Écrou hexagonal	3/8 in.-24 thread
141618	2	Retainer / Seguro / Arrêt	3/8 in. I.D. x 1-1/4 in. O.D. x .075 in. thick
140524			
141611	2	Bushing / Anillo / Bague	5/8 in. lip for 3/8 in. dia. stud-5/8"or 7/8"holes
141617	1	Hex nut / Tuerca hexagonal / Écrou hexagonal	3/8 in.-24 thread
141626	2	Retainer / Seguro / Arrêt	3/8 in. I.D. x 1-3/8 in. O.D. x .089 in. thick
140526			
403813	2	Boot / Tubo / Gaine	
403815	2	Cotter pin / Clavija / Goupille	
404046	2	Nut / Tuerca / Écrou	
140673			
141615	2	Bushing / Anillo / Bague	1/2 in. centering lip for 3/8 in. O.D. stud
141617	1	Hex nut / Tuerca hexagonal / Écrou hexagonal	3/8 in.-24 thread
141618	2	Retainer / Seguro / Arrêt	3/8 in. I.D. x 1-1/4 in. O.D. x .075 in. thick
140689			
141617	3	Hex nut / Tuerca hexagonal / Écrou hexagonal	3/8 in.-24 thread
	2	Bushing / Anillo / Bague	7/8 in. centering lip for 3/8 in. O.D. stud
	2	Retainer / Seguro / Arrêt	10 mm I.D. x 1-1/2 in. O.D. x .120 in. thick
140702			
141621	1	Hex nut / Tuerca hexagonal / Écrou hexagonal	5/8 in.-18 thread
141622	1	Lock washer / Arandela de freno / Rondelle-frein	7/16 in. I.D. (thin)
141623	1	Lock washer / Arandela de freno / Rondelle-frein	5/8 in. I.D. (thin)
141643	1	Washer / Arandela / Rondelle	7/16 in. I.D. x 1-1/4 in. O.D. x .074 in. thick
	1	Hex nut / Tuerca hexagonal / Écrou hexagonal	7/16 in.-20 thread
	1	Stud / Pasador / Goujon	5/8 in. x 18 and 7/16 in. x 20
140719			
402653-001	2	Lock washer / Arandela de freno / Rondelle-frein	5/16 in. I.D. (med.)
403870-001	2	Bolt / Tornillo / Boulon	Hex Head 5/16 in.-18 x 3/4 in. long
403871-001	2	Hex nut / Tuerca hexagonal / Écrou hexagonal	5/16 in.-18 thread
140780			
141612	2	Bushing / Anillo / Bague	7/8 in. centering lip for 7/16 in. O.D. stud
141617	1	Hex nut / Tuerca hexagonal / Écrou hexagonal	3/8 in.-24 thread
141634	1	Retainer / Seguro / Arrêt	7/16 in. I.D. x 1-11/16 in. O.D. x 1.25 in. thick
141638	1	Retainer / Seguro / Arrêt	3/8 in. I.D. x 1-11/16 in. O.D. x .120 in. thick
140857			
141614	2	Bushing / Anillo / Bague	5/8 in. centering lip for 3/8 in. O.D. stud
141617	1	Hex nut / Tuerca hexagonal / Écrou hexagonal	3/8 in.-24 thread
141618	1	Retainer / Seguro / Arrêt	3/8 in. I.D. x 1-1/4 in. O.D. x .075 in. thick
141627	1	Retainer / Seguro / Arrêt	3/8 in. I.D. x 1-1/2 in. O.D. x .093 in. thick

MOUNTING ACCESSORY PACKAGES AND COMPONENT PARTS

PAQUETES DE ACCESORIOS DE MONTAJE Y PIEZAS COMPONENTES

ENSEMBLES D'ACCESSOIRES DE MONTURES ET DE PIÈCES DÉTACHÉES

140884			
401267	1	Washer / Arandela / Rondelle	5/8 in. I.D. x 1-1/4 in. O.D. x .075 in. thick
402662	1	Spacer / Tirante / Entretoise	5/8 in. I.D. x 1-1/4 in. O.D. x 1/4 in. thick
412016	1	Extn nut / Tuerca ext. / Écrou ext.	7/16 in. x -20 thread
427030	1	Instruction sheet / Hoja de direc. / Feuillet d'instr.	
140885			
401267	1	Washer / Arandela / Rondelle	5/8 in. I.D. x 1-1/4 in. O.D. x .075 in. thick
402662	1	Spacer / Tirante / Entretoise	5/8 in. I.D. x 1-1/4 in. O.D. x 1/4 in. thick
403189	2	Spacer / Tirante / Entretoise	1/2 in. I.D. x 1-1/4 in. O.D.
411012	2	Sleeve / / Manguito / Manchon	13 mm I.D. x 5/8 in. O.D. x 1-5/16 in. long
412016	1	Extn nut / Tuerca ext. / Écrou ext.	7/16 in. x -20 thread
427031	1	Instruction sheet / Hoja de direc. / Feuillet d'instr.	
140921			
141617	1	Hex nut / Tuerca hexagonal / Écrou hexagonal	3/8 in.-24 thread
	2	Bushing / Anillo / Bague	2 pc. for 1-3/4 in. O.D. eye ring-3/4" diam. stud
	1	Pal nut / Tuerca Pal / Écrou Pal	3/8 in.-24 thread
	1	Retainer / Seguro / Arrêt	1/2 in. I.D. x 1-3/8 in. O.D. x .075 in. thick
140947			
401193	1	Lock washer / Arandela de freno / Rondelle-frein	5/8 in. I.D. (thin)
404451	2	Hex nut / Tuerca hexagonal / Écrou hexagonal	16 x 1.5 metric thread
404452	4	Retainer / Seguro / Arrêt	5/8 in. I.D. x 2-3/8 in. O.D. x .180 in. thick
404453	2	Sleeve / Manguito / Manchon	16 mm I.D. x 13/16 in. O.D. x 1-1/2 in. long
404454	4	Bushing / Anillo / Bague	1-3/16 in. centering lip for 13/16 in. O.D. stud
141041			
141617	1	Hex nut / Tuerca hexagonal / Écrou hexagonal	3/8 in.-24 thread
141626	2	Retainer / Seguro / Arrêt	3/8 in. I.D. x 1-3/8 in. O.D. x .089 in. thick
	2	Bushing / Anillo / Bague	used with 5/8 in. dia. hole or 7/8 in. dia. hole
141045			
141617	1	Hex nut / Tuerca hexagonal / Écrou hexagonal	3/8 in.-24 thread
141627	1	Retainer / Seguro / Arrêt	3/8 in. I.D. x 1-1/2 in. O.D. x .093 in. thick
	2	Bushing / Anillo / Bague	5/8 in. centering lip for 3/8 in. O.D. stud
	1	Retainer / Seguro / Arrêt	1/2 in. I.D. x 1-3/8 in. O.D. x .075 in. thick
141047			
141612	2	Bushing / Anillo / Bague	7/8 in. centering lip for 7/16 in. O.D. stud
141617	1	Hex nut / Tuerca hexagonal / Écrou hexagonal	3/8 in.-24 thread
141619	1	Hex nut / Tuerca hexagonal / Écrou hexagonal	1/2 in.-20 thread
141620	1	Lock washer / Arandela de freno / Rondelle-frein	1/2 in. I.D. (thin)
141622	1	Lock washer / Arandela de freno / Rondelle-frein	7/16 in. I.D. (thin)
141634	1	Retainer / Seguro / Arrêt	7/16 in. I.D. x 1-11/16 in. O.D. x 1.25 in. thick
141638	1	Retainer / Seguro / Arrêt	3/8 in. I.D. x 1-11/16 in. O.D. x .120 in. thick
141642	1	Stud / Pasador / Goujon	1/2 in. x 20 and 7/16 in. x 20
141643	1	Washer / Arandela / Rondelle	7/16 in. I.D. x 1-1/4 in. O.D. x .074 in. thick
	1	Hex nut / Tuerca hexagonal / Écrou hexagonal	7/16 in.-20 thread
141083			
401193	1	Lock washer / Arandela de freno / Rondelle-frein	5/8 in. I.D. (thin)
404451	1	Hex nut / Tuerca hexagonal / Écrou hexagonal	16 x 1.5 metric thread
404452	2	Retainer / Seguro / Arrêt	5/8 in. I.D. x 2-3/8 in. O.D. x .180 in. thick
404453	1	Sleeve / Manguito / Manchon	16 mm I.D. x 13/16 in. O.D. x 1-1/2 in. long
404454	2	Bushing / Anillo / Bague	1-3/16 in. centering lip for 13/16 in. O.D. stud
141108			
401174	2	Hex nut / Tuerca hexagonal / Écrou hexagonal	5/8 in.-18 thread
405360	4	Retainer / Seguro / Arrêt	5/8 in. I.D. x 1-5/8 in. O.D. x .11 in. thick
405361-000	4	Bushing / Anillo / Bague	1 in. centering lip for 5/8 in. O.D. stud (1.00 in. thick)
141137			
402812	1	Sleeve / Manguito / Manchon	13 mm I.D. x 5/8 in. O.D. x 1-5/16 in. long

MOUNTING ACCESSORY PACKAGES AND COMPONENT PARTS

PAQUETES DE ACCESORIOS DE MONTAJE Y PIEZAS COMPONENTES

ENSEMBLES D'ACCESSOIRES DE MONTURES ET DE PIÈCES DÉTACHÉES

141138			
401006	2	Hex nut / Tuerca hexagonal / Écrou hexagonal	3/8 in.-24 thread
403489	4	Bushing / Anillo / Bague	5/8 in. centering lip for 3/8 in. O.D. stud
403575	4	Retainer / Seguro / Arrêt	25/64 in. I.D. x 1-1/4 in. O.D. x .12 in. thick
404949	4	Washer / Arandela / Rondelle	1/2 in. I.D. x 1-1/2 in. O.D. x .04 thick
141168			
141617	1	Hex nut / Tuerca hexagonal / Écrou hexagonal	3/8 in.-24 thread
141618	1	Retainer / Seguro / Arrêt	3/8 in. I.D. x 1-1/4 in. O.D. x .075 in. thick
	1	Bushing / Anillo / Bague	5/8 in. centering lip for 3/8 in. O.D. stud
	1	Bushing / Anillo / Bague	5/8 in. centering lip for 3/8 in. O.D. stud
	1	Retainer / Seguro / Arrêt	3/8 in. I.D. x 1-5/8 in. O.D. x .119 in. thick
141247			
141621	1	Hex nut / Tuerca hexagonal / Écrou hexagonal	5/8 in. -18 thread
	2	Bushing / Anillo / Bague	2 pc. for 2-3/4 in. O.D. eye ring-1 diam. stud"
	2	Bushing / Anillo / Bague	1 in. centering lip for 5/8 in. O.D. stud
	2	Retainer / Seguro / Arrêt	5/8 in. I.D. x 1-5/8 in. O.D. x 11 in. thick
141349			
141617	1	Hex nut / Tuerca hexagonal / Écrou hexagonal	3/8 in.-24 thread
141626	2	Retainer / Seguro / Arrêt	3/8 in. I.D. x 1-3/8 in. O.D. x .089 in. thick
	2	Bushing / Anillo / Bague	used with 5/8 in. dia. hole or 7/8 in. dia. hole
	1	Instruction sheet / Hoja de direc. / Feuillet d'instr.	
	1	Pal nut / Tuerca Pal / Écrou Pal	3/8 in.-24 thread
141350			
141611	2	Bushing / Anillo / Bague	5/8 in. lip for 3/8 in. dia. stud-5/8"or 7/8'holes
141617	1	Hex nut / Tuerca hexagonal / Écrou hexagonal	3/8 in.-24 thread
141626	2	Retainer / Seguro / Arrêt	3/8 in. I.D. x 1-3/8 in. O.D. x .089 in. thick
	1	Jam nut / Contratuerca / Contre-Écrou	3/8 in. -24 thread
141353			
141617	1	Hex nut / Tuerca hexagonal / Écrou hexagonal	3/8 in.-24 thread
141627	2	Retainer / Seguro / Arrêt	3/8 in. I.D. x 1-1/2 in. O.D. x .093 in. thick
	2	Bushing / Anillo / Bague	7/8 in. centering lip for 3/8 in. O.D. stud
	1	Jam nut / Contratuerca / Contre-Écrou	3/8 in. -24 thread
141354			
141617	1	Hex nut / Tuerca hexagonal / Écrou hexagonal	3/8 in. - 24 thread
	2	Bushing / Anillo / Bague	3/4 in. centering lip for 7/16 in. O.D. stud
	1	Pal nut / Tuerca Pal / Écrou Pal	3/8 in. - 24 thread
	1	Retainer / Seguro / Arrêt	3/8 in. I.D. x 1-5/8 in. O.D. x .119 in. thick
	1	Retainer / Seguro / Arrêt	7/16 in. I.D. x 1-5/8 in. O.D. x .125 in. thick
141356			
141615	2	Bushing / Anillo / Bague	1/2 in. centering lip for 3/8 in. O.D. stud
141617	1	Hex nut / Tuerca hexagonal / Écrou hexagonal	3/8 in.-24 thread
141618	2	Retainer / Seguro / Arrêt	3/8 in. I.D. x 1-1/4 in. O.D. x .075 in. thick
	1	Pal nut / Tuerca Pal / Écrou Pal	3/8 in.-24 thread
141368			
141614	2	Bushing / Anillo / Bague	5/8 in. centering lip for 3/8 in. O.D. stud
141617	1	Hex nut / Tuerca hexagonal / Écrou hexagonal	3/8 in.-24 thread
141618	1	Retainer / Seguro / Arrêt	3/8 in. I.D. x 1-1/4 in. O.D. x .075 in. thick
141627	1	Retainer / Seguro / Arrêt	3/8 in. I.D. x 1-1/2 in. O.D. x .093 in. thick
	1	Instruction sheet / Hoja de direc. / Feuillet d'instr.	
	1	Jam nut / Contratuerca / Contre-Écrou	3/8 in. -24 thread
141376			
141614	2	Bushing / Anillo / Bague	5/8 in. centering lip for 3/8 in. O.D. stud
141617	1	Hex nut / Tuerca hexagonal / Écrou hexagonal	3/8 in.-24 thread
141618	2	Retainer / Seguro / Arrêt	3/8 in. I.D. x 1-1/4 in. O.D. x .075 in. thick
	1	Pal nut / Tuerca Pal / Écrou Pal	3/8 in.-24 thread

MOUNTING ACCESSORY PACKAGES AND COMPONENT PARTS

PAQUETES DE ACCESORIOS DE MONTAJE Y PIEZAS COMPONENTES

ENSEMBLES D'ACCESSOIRES DE MONTURES ET DE PIÈCES DÉTACHÉES

141439			
401011	2	Bushing / Anillo / Bague	2 pc. for 1-3/4 in. O.D. eyering-3/4 diam. stud"
411165	1	Nut / Tuerca / Écrou	
411445	2	Bushing / Anillo / Bague	
411446	2	Retainer / Seguro / Arrêt	
411447	1	Washer / Arandela / Rondelle	
412554	1	Washer / Arandela / Rondelle	
141448			
	2	Bushing / Anillo / Bague	9/16 in. I.D. x 1-5/16 in. O.D. x 3/4 in. O.D.
	2	Centering washer / Arandala autocent. / Rondelle autocen.	3/4 in. I.D. x 1-7/8 in. O.D. x .047 in. thick
	1	Lock nut / Contratuerca / Contre-Écrou	12 x 1.25 metric thread
	2	Washer / Arandela / Rondelle	
141514			
141617	1	Hex nut / Tuerca hexagonal / Écrou hexagonal	3/8 in.-24 thread
141627	2	Retainer / Seguro / Arrêt	3/8 in. I.D. x 1-1/2 in. O.D. x .093 in. thick
	2	Bushing / Anillo / Bague	3/8 in. I.D. x 1-3/16 in. x 9/16 in. thick
	1	Pal nut / Tuerca Pal / Écrou Pal	3/8 in.-24 thread
141537			
401006	1	Hex nut / Tuerca hexagonal / Écrou hexagonal	3/8 in.-24 thread
404350	2	Retainer / Seguro / Arrêt	3/8 in. I.D. x 1-5/8 in. O.D. x .119 in. thick
404985	2	Bushing / Anillo / Bague	5/8 in. centering lip for 3/8 in. O.D. stud
141665			
141617	1	Hex nut / Tuerca hexagonal / Écrou hexagonal	
141634	1	Retainer / Seguro / Arrêt	7/16 in. I.D. x 1-11/16 in. O.D. x .125 in. thick
141638	1	Retainer / Seguro / Arrêt	3/8 in. I.D. x 1-11/16 in. O.D. x .120 in. thick
	2	Bushing / Anillo / Bague	3/4 in. centering lip for 7/16 in. O.D. stud
	1	Jam nut / Contratuerca / Contre-Écrou	3/8 in. - 24 thread
142069			
	1	Bushing / Anillo / Bague	For 3/8 in. O.D. stud- no centering lip
	1	Lock nut / Contratuerca / Contre-Écrou	12 x 1.25 metric thread
	1	Retainer / Seguro / Arrêt	
	1	Washer / Arandela / Rondelle	9/16 in. I.D. x 1-3/4 in. O.D. x 1/4 in. O.D.
142095			
411165	1	Lock nut / Contratuerca / Contre-Écrou	12 x 1.25 metric thread
411447	2	Retainer / Seguro / Arrêt	
412103	1	Washer / Arandela / Rondelle	9/16 in. I.D. x 1-3/4 in. O.D. x 1/4 in. O.D.
412116	2	Bushing / Anillo / Bague	
145054			
401174	1	Hex nut / Tuerca hexagonal / Écrou hexagonal	5/8 in. -18 thread
401175	1	Lock washer / Contratuerca / Contre-Écrou	
405360	2	Retainer / Seguro / Arrêt	5/8 in. I.D. x 1-5/8 in O.D. x .11 in. thick
405361-000	2	Bushing / Anillo / Bague	1 in. centering lip for 5/8 in. O.D. stud (1.00 in. thick)
145075			
401750	1	Retainer / Seguro / Arrêt	3/4 in. I.D. x 2-3/8 in. O.D. x .105 thick
401752	1	Retainer (washer) / Seguro (arandala) / Arrêt (rondelle)	1 in. I.D. x 2-3/8 in. O.D. x .105 thick
401754	2	Bushing / Anillo / Bague	2 pc. for 2-3/4 in. O.D. eye ring - 1" diam. stud
405360	2	Retainer (washer) / Seguro (arandala) / Arrêt (rondelle)	5/8 in. I.D. x 2-3/16 in. O.D. x .120 thick
405361-000	2	Bushing / Anillo / Bague	1 in. centering lip for 5/8 in. O.D. stud (1.00 in. thick)
145080			
401011	2	Bushing / Anillo / Bague	2 pc. for 1-3/4 in. O.D. eyering-3/4 diam. stud"
401429	1	Retainer / Seguro / Arrêt	1/2 in. I.D. x 1-5/8 in. O.D. x .090 in. thick
401430	1	Retainer / Seguro / Arrêt	3/4 in. I.D. x 1-5/8 in. O.D. x .090 in. thick
145089-000			
405360	2	Retainer / Seguro / Arrêt	5/8 in. I.D. x 1-5/8 in O.D. x .11 in. thick
405361-000	2	Bushing / Anillo / Bague	1 in. centering lip for 5/8 in. O.D. stud (1.00 in. thick)
405862	1	Lock nut / Contratuerca / Contre-Écrou	5/8 in. - 18 thread

MOUNTING ACCESSORY PACKAGES AND COMPONENT PARTS

PAQUETES DE ACCESORIOS DE MONTAJE Y PIEZAS COMPONENTES

ENSEMBLES D'ACCESSOIRES DE MONTURES ET DE PIÈCES DÉTACHÉES

145089-200			
415196-001	1	Nylon lock nut / Contratuerca / Contre-Écrou	5/8 in. - 18 thread
405360	2	Retainer / Seguro / Arrêt	5/8 in. I.D. x 1-5/8 in O.D. x .11 in. thick
405361-100	2	Bushing / Anillo / Bague	1 in. centering lip for 5/8 in. O.D. stud (0.750 thick)
145090			
404276	1	Instruction sheet / Hoja de direc. / Feuillet d'instr.	
405643	1	Sleeve / Manguito / Manchon	
405859	2	Bushing / Anillo / Bague	
405860	2	Retainer / Seguro / Arrêt	
405862	1	Lock nut / Contratuerca / Contre-Écrou	5/8 in. -18 thread
145093			
401750	2	Retainer / Seguro / Arrêt	3/4 in. I.D. x 2-3/8 in. O.D. x .105 thick
401752	2	Retainer (washer) / Seguro (arandala) / Arrêt (rondelle)	1 in. I.D. x 2-3/8 in. O.D. x .105 thick
401754	4	Bushing / Anillo / Bague	2.39 in. O.D. eye ring - 1" diam. stud
145099			
401174	1	Hex nut / Tuerca hexagonal / Écrou hexagonal	5/8 in. -18 thread
401175	1	Lock washer / Arandala de freno / Rondelle-frein	
401754	2	Bushing / Anillo / Bague	2 pc. for 2-3/4 in. O.D. eyering-1" diam. stud
405360	2	Retainer / Seguro / Arrêt	5/8 in. I.D. x 1-5/8 in O.D. x .11 in. thick
405361-000	2	Bushing / Anillo / Bague	1 in. centering lip for 5/8 in. O.D. stud (1.00 in. thick)
424274	1	Instruction sheet / Hoja de direc. / Feuillet d'instr.	
145112			
401164	1	Nut / Tuerca / Écrou	
401165	1	Lock washer / Arandala de freno / Rondelle-frein	1/2 in lock washer
405360	1	Retainer (washer) / Seguro (arandala) / Arrêt (rondelle)	5/8 in. I.D. x 2-3/16 in. O.D. x .120 thick
405361-000	2	Bushing / Anillo / Bague	1 in. centering lip for 5/8 in. O.D. stud (1.00 in. thick)
405934	1	Retainer (washer) / Seguro (arandala) / Arrêt (rondelle)	0.530 in. I.D. x 2-3/16 in. O.D. x .120 thick
145116			
401750	1	Retainer / Seguro / Arrêt	3/4 in. I.D. x 2-3/8 in. O.D. x .105 thick
401752	1	Retainer (washer) / Seguro (arandala) / Arrêt (rondelle)	1 in. I.D. x 2-3/8 in. O.D. x .105 thick
415169	2	Bushing / Anillo / Bague (Durometer 80)	2 pc. for 2-3/4 in. O.D. eye ring - 1" diam. stud
145123			
405360	2	Retainer (washer) / Seguro (arandala) / Arrêt (rondelle)	5/8 in. I.D. x 2-3/16 in. O.D. x .120 thick
405862	1	Self locking nut / Tuerca de secur. / Écrou indesserrable	5/8 in. - 18 thread
415017-001	2	Bushing / Anillo / Bague	1 in. centering lip for a 5/8 in. O.D. stud
145126			
401750	2	Retainer / Seguro / Arrêt	3/4 in. I.D. x 2-3/8 in. O.D. x .105 thick
401754	2	Bushing / Anillo / Bague	2 pc. for 2.39 in. O.D. eye ring - 1" diam. stud
403752	1	Sleeve / Manguito / Manchon	3/4 in. I.D. x 15/16 in. O.D. x 1-3/4 in. long
415277	1	Spacer / Tirante / Entretoise	13/16 in. I.D. x 1-1/4 in. O.D. x .200 thick
424281	1	Instruction sheet / Hoja de direc. / Feuillet d'instr.	
145128			
405360	2	Retainer (washer) / Seguro (arandala) / Arrêt (rondelle)	5/8 in. I.D. x 2-3/16 in. O.D. x .120 thick
405361-000	2	Bushing / Anillo / Bague	1 in. centering lip for 5/8 in. O.D. stud (1.00 in. thick)
415196-001	1	Nylon locknut / Contratuerca nilon / Contre-Écrou nylon	5/8 in. - 18 thread
145132			
415305-000	2	Rubber spacer / Tirante de goma / Entretoise de caout.	0.910 in. I.D. x 1.58 in. O.D. x 1.1 in. long
415305-001	2	Rubber spacer / Tirante de goma / Entretoise de caout.	0.910 in. I.D. x 1.58 in. O.D. x 0.427 in. long
424282	1	Instruction sheet / Hoja de direc. / Feuillet d'instr.	
145143			
415305-001	2	Rubber spacer / Tirante de goma / Entretoise de caout.	0.910 in. I.D. x 1.58 in. O.D. x 0.427 in. long
424284	1	Instruction sheet / Hoja de direc. / Feuillet d'instr.	
145144			
415305-000	2	Rubber spacer / Tirante de goma / Entretoise de caout.	0.910 in. I.D. x 1.58 in. O.D. x 1.1 in. long
424284	1	Instruction sheet / Hoja de direc. / Feuillet d'instr.	
145147			
401429	1	Retainer / Seguro / Arrêt	1/2 in. I.D. x 1-5/8 in. O.D. x .090 in. thick
401430	1	Retainer / Seguro / Arrêt	3/4 in. I.D. x 1-5/8 in. O.D. x .090 in. thick

MOUNTING ACCESSORY PACKAGES AND COMPONENT PARTS

PAQUETES DE ACCESORIOS DE MONTAJE Y PIEZAS COMPONENTES

ENSEMBLES D'ACCESSOIRES DE MONTURES ET DE PIÈCES DÉTACHÉES

145148			
401750	1	Retainer / Seguro / Arrêt	3/4 in. I.D. x 2-3/8 in. O.D. x .105 thick
401752	1	Retainer (washer) / Seguro (arandala) / Arrêt (rondelle)	1 in. I.D. x 2-3/8 in. O.D. x .105 thick
145149			
401265	1	Retainer / Seguro / Arrêt	1/2 in. I.D. x 1-1/4 in. O.D. x .075 in. thick
401266	1	Retainer / Seguro / Arrêt	5/8 in. I.D. x 1-1/4 in. O.D. x .075 in. thick
401011			
	1	Bushing / Anillo / Bague	2 pc. for 1-3/4 in. O.D. eye ring - 3/4" diam. stud
401754			
	1	Bushing / Anillo / Bague	2 pc. for 2-3/4 in. O.D. eye ring-1" diam. stud
405360			
	1	Retainer (washer) / Seguro (arandala) / Arrêt (rondelle)	5/8 in. I.D. x 2-3/16 in. O.D. x .120 thick
415015-001			
	1	Urethane bushing / Anillo uretano / Bague urÉthane	For 2-3/4 in. O.D. eye ring - 1" diam. stud
415017			
	1	Urethane bushing / Anillo uretano / Bague urÉthane	1 in. centering lip for 5/8 in. O.D. stud
415025-001			
	1	Urethane bushing / Anillo uretano / Bague urÉthane	For 1-3/4 in. O.D. eye ring - 3/4" diam. stud
415326			
	1	Urethane bushing / Anillo uretano / Bague urÉthane	1 in. centering lip for 5/8 in. O.D. stud (replacing Bushing P/N 415017)

Mounting Accessory Packages — Buyer'sGuide

Conjuntos de accesorios de fijación - Guía del comprador

Ensemble d'accessoires pour la fixation — Guide de l'acheteur

140126	83027	**140702**	G60014	**141350**	G60136	**145080**	85012	**401754**	83132
	G60011	**(cont'd)**	G60113	**(cont'd)**	G60137	**(cont'd)**	85054		83214
	G60017		G60185		G60153		85055		83215
	G60024	**140719**	G60161	**141353**	G60052		85062		83217
	G60043		G60222		G60129		85063		83225
	G60078		G61114	**141354**	G60250		89408		83362
140149	83200	**140780**	83018	**141356**	G60074		89413		85001
	83216		83019		G60305		89438		85004
	83219		83105	**141368**	G60310		89439		85007
	83308		83114	**141376**	G60304	**145089-000**	83102		85040
	83309		G60023	**141439**	G60088		83120		85042
	83312		G60026	**141448**	G60089		85319		85070
	83314		G60038		G60124		85733		85300
	85023		G60041		G60205		89428		85301
	85024		G60071		G60216	**145089-200**	85936		85302
	85046		G60073		G60217		85937		85303
	85047		G60114		G60237		89456		85304
	89401		G60158		G60238	**145090**	85316		85305
	89402		G60162	**141514**	G60180		85705		85307
	89403		G60171		G61140		85706		85308
	89409		G60181	**141537**	G60098		85707		85313
	89415		G60182	**141665**	G60257		85708		85314
	89416		G60183		G60258		85709		85315
	89434		G60184		G60259		85722		85320
	89435		G60330		G60264		85935		85327
	G60103	**140857**	G60303		G61144		89426		85329
	G60128	**140884**	G60031	**142069**	G60176	**145093**	85714		85334
140169	85025	**140885**	G60003	**142095**	G60177		85715		85376
	85031	**140921**	G60154	**142998**	83456		85716		85700
	G60091		G60269	**145054**	83103		85717		85702
	G60119	**141041**	G60070		83106		85718		85704
	G60177	**141045**	G60122		83134		85719		85712
	G60251	**141047**	G60033		83635	**145099**	83353		85713
140357	G60010		G60072		85009		85033		85720
	G60065	**141083**	83301		85025		89427		85729
140455	83003		83317		85026	**145116**	85732		85730
	83005		83318		85027	**145126**	85053		85731
	83014		83613		85049		89442		85901
	83015	**141108**	85310		85071	**145128**	83109		85905
	83400		89423		85318		83110		85912
	G60049		89447		85324		83111		85913
	G60354		89455		85325		83112		85915
	G61139	**141137**	G60042		85326		83138		87001
140524	G60086		G60101		85328		83142		87002
	G60087		G60255		85330		83143		87004
	G60100	**141138**	G60002		85336		85065		87006
	G60106		G60046		85701		85332		89410
	G60109	**141168**	G60076		85729		85333		89412
	G60164	**141247**	85311		85731	**145132**	85066		89419
	G60165		85312		85900		89450		89420
	G60194		85703		85902	**145140**	85727		89422
140526	630811		85710		85921		85728		89425
140673	G60301		85711		89417	**145143**	83120		89429
	G60338		89424		89418	**145144**	85065	**405360**	85727
140689	G60030	**141349**	G60091		89441	**145148**	83140	**415010-802**	83140
140702	83303		G60105	**145075**	85723		83141		83141
	83304	**141350**	G60104	**145080**	83107	**401011**	89446		

Gabriel®
COMMERCIAL VEHICLE
An ArvinMeritor™ Brand

GABRIEL® Catálogo 2007

Amortiguadores para Camiones, Remolques y Buses

Gabriel®
COMMERCIAL VEHICLE

an *ArvinMeritor* brand

GasSLX

Garantía de 2 años 320 000 kilómetros

Nuestro amortiguador a gas de alta calidad, ajustable en tres posiciones, para camiones pesados.

FLUIDO A.T.

- Celda de gas única con junta doble para una retención superior del gas
- Posiciones ajustables ofrecen una selección personalizada de paseo
- Calibre de 1-5/8 pulg. con fijaciones extremas soldadas por arco en 360°, mayor durabilidad
- Fluido A.T. especial reduce rozamiento y desgaste en condiciones extremas de servicio
- Muchos componentes de primera calidad se combinan para proporcionar lo mejor en rendimiento y durabilidad

FLEETLINE

Nuestro producto más pequeño de alta resistencia, el más adecuado para camionetas o suspensiones delanteras de camiones pesados.

- Calibre de 1-3/8 pulg.
- Tapa apretada[1]
- Válvula de 9 etapas

Una durabilidad mejorada hace de estas dos series el producto de alta resistencia estándar para las suspensiones modernas de baja fricción.

- Calibre de 1-5/8 pulg. para una durabilidad mejorada
- Fijaciones soldadas por arco en 360° protegen contra las fracturas
- Tope de extensión hidráulico[2] protege contre los daños en los amortiguadores y componentes de fijación del vehiculo
- Junta de pistón múltiple – protección adicional de la junta hermética
- Tapa soldada para una resistencia mejorada a la tracción

Garantía de un año kilómetros sin límite

Diseñada para los camiones y autobuses de uso industrial. Las caracteristicas únicas de esta serie permiten garantizar una durabilidad excepcional.

FLUIDO A.T.

- Calibre de 1-5/8 pulg. con un diseño abombado para una capacidad mayor de fluido
- Material patentado de la junta de pistón aumenta considerablemente la vida de la junta
- Fluido A.T. especial reduce la fricción y el desgaste bajo condiciones extremas de servicio
- Todas las características especiales contenida en las series 85000 y 85300

[1] Tapa soldada si necesito.
[2] Si necesito.

Conceptualizados con la misma exigencias de calidad, diseño, duración y resistencia que caracterizan nuestros mundialmente famosos amortiguadores de equipo orginal.

Amortiguadores de cabina

FLEETLINE

Amortisseurs pour cabine

Diseñado especificamente para eliminar las vibraciones dentro de la cabina.

- Calibres de 1, 1-3/16, 1-3/8 y 1-5/8 pulg. para una suspension adaptado a los diseños varios de cabinas
- La celda a gas[3] única reduce el recalentamiente causado por la ventilación del fluido
- Válvula exclusiva de 9 etapas para uno paseo uniforme en todas velocidades
- Biela de pistón cromada de alta calidad diseñado para resistar a la corrosión y reducir el desgaste de la junta de la biela
- Junta de pistón múltiple protege hermética de la junta y mejor durabilidad

1 Garantía de un año kilómetros sin límite

Serie 66000

GAS Light Truck

Rendimiento uniforme y garantizado. Diseñado para camionetas estándar y furgones.

- Calibre de 1-3/8 pulg.
- A gas
- Junta de biela de pistón y a cierre radial
- Aplicaciones no comerciales solamente

1 Garantía de un año 40 000 kilómetros

Estabilizadores de dirección

- Fijaciones extremas reforzadas, soldadas por arco, protegen contra las fracturas y proveen una durabilidad mejora
- El diseño único a celda de gas separa el aire y el fluido para asegurar uno servicio educuado en la posición horizontal
- Fijaciones de diseño especial (tipo equipo original) para uno montaje y una durabilidad mejorados

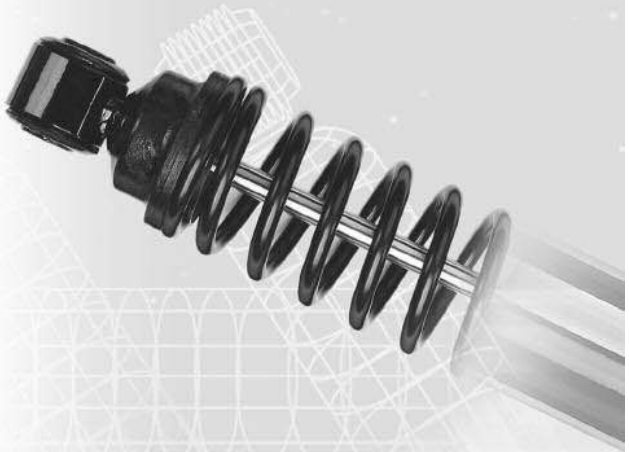

[3]Si el diseño lo permite.

INDICE

Acerca des los amortiguadores Gabriel para camiones pesados

Información acerca de los productos 256
Cuando se deben cambiar los amortiguadores 263
Instrucciones para eliminar los amortiguadores 266
Política de garantía 267
Cambios en el catálogo 13

Lista de applicaciones

Amortiguadores de cabina 14
Amortiguadores para applicaciones especiales 19
(estabilizadores de dirección, amortiguadores de capó)
Camionetas 20
Camiones pesados y medianos, remolques y autobuses 44

Lista numérica

Amortiguadores para applicaciones especiales 176
Gas Light Truck 176
Fleetline 178
GasSLX 185

Lista de intercambio

Intercambio competitivo 188
Intercambio con equipo original 201
Intercambio Fleetline/GasSLX 217
Intercambio No. del fabricante a No. de catálogo 218

Cómo escoger el mejor amortiguador para su camión

Identificar la serie/Midar las dimensiones exterior 220
Identificar el tipo de fijación/Midar la extensión maxima y la compresión maxima 221
Identificar el código de montaje/tipo de fijación Gabriel 222
Identificar el número de parte adecuado/especificaciones de fijaciones 226
Especificaciones por número de parte 236

Conjuntos de accesorios de fijación

Lista de piezas componentes 247
Guia del comprador 253

Sección en francés

Indice 269

FLEETLINE

Amortiguadores de cabina

Diseñados especificamente para el control de la vibracion de cabina

"Lea la lista de aplicatione en las páginas 14 a 18."

- Diseño unico de CELDA DE GAS* que reduce el recalentamiento
- Sistema exclusivo de válvulas de 9 pasos que proporciona un control uniforme a cualquier volocidad
- Biela de pistón cromada de alta calidad diseñado para resistir la corrosión y reducir el desgaste del sello del vástago
- Sello de bandas múltiples de nitrilo de la biela de piston para una mayor durabilidad
- Fluido de amortiguador para todo clima mantiene al amortiguador funcionando normalmente en temperaturas extremas

* Si el desiño lo permite

Garantía de un año kilómetros sin límite

Gabriel®
COMMERCIAL VEHICLE

an ***ArvinMeritor*** brand

GasSLX
Amortiguadores ajustables al gas para camiones de carga pesada

¡El viaje más "SLXcelente"!

El amortiguador de tres posiciones graduable le permite elegir entre 3 posiciones: "Regular", "Firme" y "Extra firme".

El ajuste "Firme" es el más cercano a la actuación en viaje del equipo original.

Los ajustes "Regular" y "Extra firme" en circunstancias normales le permiten obtener un viaje más suave o más firme que el amortiguador del equipo original. Para un viaje más suave que con el amortiguador original usted puede elegir hacer clic en el ajuste "Regular". Para un viaje más firme y controlado que con el amortiguador original usted puede elegir hacer clic en el ajuste "Extra firme".

¡Usted elige!

Comparación de fuerza de retroceso para GasSLX versus Equipo original típicos

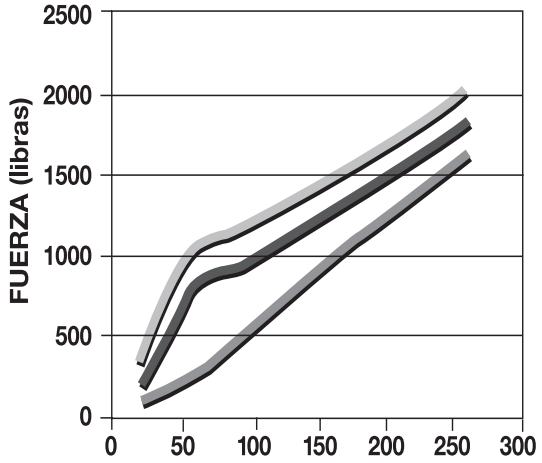

FLUIDO A.T.

Garantía de 2 años 320 000 kilómetros

¡SIN CONTROL ... LO DEMÁS NO IMPORTA!

Gabriel®
COMMERCIAL VEHICLE

an ArvinMeritor brand

GasSLX

camiones de carga pesada

Amortiguadores ajustables al gas para

FIABILIDAD CONTROL COMODIDAD SELECCION DE SUSPENSION

En la compañía Gabriel, cuando hablamos de perfeccionamiento, más que una promesa, es un compromiso de proveer un buen producto. El diseño de GasSLX de Gabriel incluye componentes de primera calidad que hacen toda la diferencia.

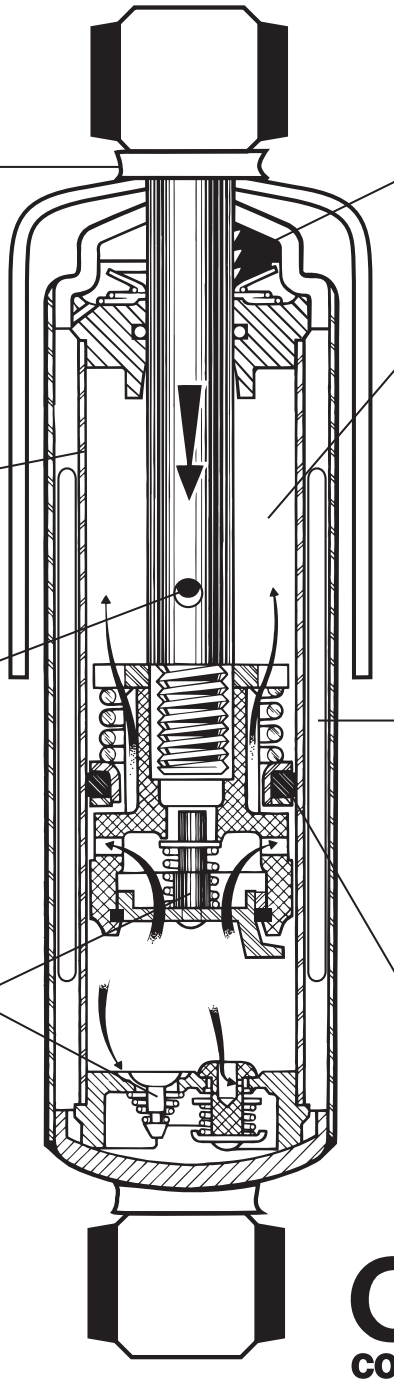

FIJACIONES DE LAS EXTREMIDADES SOLDADAS POR ARCO EN 360°

Protección contra la fractura de las fijaciones de las extremidades.
Las suspensiones modernas necesitan amortiguadores resistentes a la flexión multidirectional. Gracias al refuerzo de la soldadura en 360°, podemos garantizar una superioridad estructural.

Resistencia superior a la tracción
Da la resistencia adicional necesaria para limitar el recorrido de las suspensiones neumáticas.

CALIBRE SUPERIOR

Calibre de 1 5/8", diseño comprobado del fabricante de equipo original.
Area de trabajo óptima cuando se combina con el fluido A.T. Gabriel, garantiza un rendimiento y una durabilidad incomparable.

TOPE DE REBOTE HIDRAULICO

Impide daños de choque a los componentes del amortiguador y de fijación del vehículo.
En caso de extensión total, el agujero de restricción en el vástago se cierra atrapando el fluido entre el pistón y la culata superior, creando un cojín hidráulico.

VALVULAS DE 9 ETAPAS

Mejora el dominio del vehículo manteniendo la comodidad de la suspensión.
Permite ajustar los parámetros de amortiguación, de manera independiente, a varias velocidades.

SELLO DE MULTAS BANDAS EN VITON

Un diseño más sólido de la junta hermética para mejorar la retención de fluido y rendimiento en alta temperatura.
Multas bandas de cierre sirven de refuerzo para impedir los derrames de fluido.

FLUIDO DE ALTA TEMPERATURA (A.T.)

FLUIDO A.T.

Reduce la fricción y el desgaste bajo condiciones de operación extremas.
Presiones y temperaturas extremas pueden causar la descomposición de fluidos estándares utilizados en los amortiguadores. La fórmula única de fluido A.T. Gabriel mantiene sus propiedades lubricantes bajo condiciones de presión y temperatura dos o tres veces más elevadas que los fluidos de amortiguadores normales.

CELDA DE GAS

Doble junta hermética para asegurarse que el hexafluoruro de azufre gaseoso quede dentro del amortiguador.
La celda de gas separa el gas del fluido para que no se mezclen y que no haya burbujas en el fluido que pudieran reducir su eficiencia.

ARO DEL PISTON DE HIERRO COLADO

Accionado hidráulicamente para mantener las características de amortiguacíon necesarias.
Según se desgasta el aro, la presión hidráulica lo empuja hacia afuera en el tubo para mantener el sello y las características de amortiguación.

Garantía de dos años 320 000 kilómetros

Gabriel®
COMMERCIAL VEHICLE

an *ArvinMeritor* brand

FLEETLINE

Amortiguadores para camiones de servicio pesado

Componentes de calidad superior garantizan un mayor rendimento por toda la duración del amortiguador, lo que significa menos desgaste de otras piezas de suspensión costosas.

Amortiguadores resistentes que le permiten manejar su vehículo.

Fijaciones soldadas por arco en 360° y formadas en frío*
- Mayor resistencia a la tracción
- Reducción importante de las fracturas de las fijaciones de las extremidades

Sello de bandas múltiples
- Protección adicional del sello = Retención de fluido superior
- Retención de fluido superior = Mayor duración del amortiguador

Diseño abombado**
- Mayor capacidad de fluido
- Temperaturas de operación más bajas
- Menos desgaste interno debido a la disipación del calor

Calibre superior de 1 5/8"*
- Mayor resistencia a la tracción
- Diseñado para mayor control
- Diseño probado para las suspensiones con un coeficiente de fricción bajo

Deseño del sello del pistón de tipo flotante
- Reduce las variabilidades fuerza/velocidad
- Aumenta la capacidad de control en velocidades menores
- Autocompensa el desgaste
- Menos desgaste entre el cilindro y el sello del pistón que significa menos espacio libre y por lo tanto, menos debilitamiento
- Menos dibilitamiento significa un rendimiento más constante en toda la operación

Tope de extensión hidráulico
- Impide que los amortiguadores excedan su punto de saturación y que la extensión de la suspensiones sea excesiva
- Diseñado para suspensiones con un coeficiente de fricción bajo, como las suspensiones neumáticas, etc.

Válvula de muelles helicoidales de 9 etapas
- Para mayor comodidad y control
- Durabilidad mejorada
- Autolimpiable

Garantía de un año kilómetros sin límite

* Excepto la serie 83000.
** Incluye las series 85300, y 85700.

NOTA : Las características pueden variar según el número de parte.

Gabriel®
COMMERCIAL VEHICLE
an ArvinMeritor brand

Evolución a amortiguadores de mayor rendimiento

¡La evolución a suspensiones de mayor rendimiento se ha estado produciendo desde hace bastante tiempo! Un gran número de suspensiones de camiones y remolques de hoy están equipados con suspensiones de fricción baja, tales como Resortes Neumáticos u Hojas Ahusadas. Las exigencias de un rendimiento superior, y un mayor recorrido de estas suspensiones de fricción baja, han hecho imperativo que los amortiguadores funcionen a niveles de rendimiento máximos.

Las suspensiones de ayer....

Las suspensiones pesadas de hojas múltiples tenían un recorrido muy limitado y gran fricción intrínseca. Las hojas múltiples amortiguaban rápidamente la oscilación de la suspensión, limitando la cantidad de trabajo que los amortiguadores necesitaban para realizar su función.

Las suspensiones de hoy y mañana....

La nueva generación de suspensiones de fricción baja, tales como los Resortes Neumáticos o las hojas Ahusadas, están conceptualizadas para que tengan una fricción de amortiguamiento de suspensión muy baja, y gran recorrido vertical. Estas características aumentan el control operacional y el rendimiento de los camiones y remolques de hoy, además de reducir el cansancio físico del conductor aislando al equipo y su carga de daños debido a la vibración causada por la carretera.

Los amortiguadores adecuados se necesitan más que nunca....

El cambio a la suspensión de fricción baja ha aumentado la necesidad del control de la oscilación de la suspensión, y ha elevado la posición del amortiguador a un nivel de **componente crítico** en los camiones y remolques de hoy.

¡Nosotros tenemos los amortiguadores correctos para todas sus necesidades! Después de todo, sin control.... ¡Nada más tiene importancia!

Suspensión de hojas múltiples

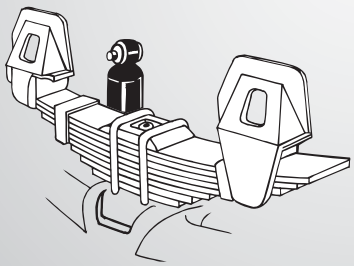

La fricción de amortiguación intrínseca limita el recorrido de la suspensión de 2 a 3 pulg.

Suspensión de resorte neumático

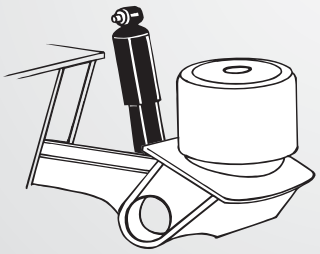

Suspensión de hoja ahusada

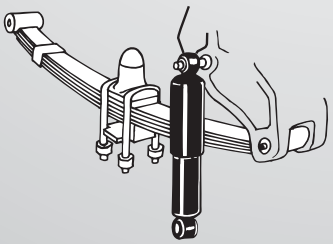

La responsabilidad del amortiguamiento ha sido pasada a los amortiguadores. Estas suspensiones pueden recorrer más de 9 pulg.

Gabriel®
COMMERCIAL VEHICLE

an *ArvinMeritor* brand

¿CUANDO SE DEBEN CAMBIAR LOS AMORTIGUADORES?

Las condiciones siguientes indican que es necesario reemplazar sus amortiguadores. No olvide que los amortiguadores usados pueden causar vibraciones que pueden causar daños eléctricos, al chasis o al motor. La inspección regular de los amortiguadores puede extender la duración de su camión.

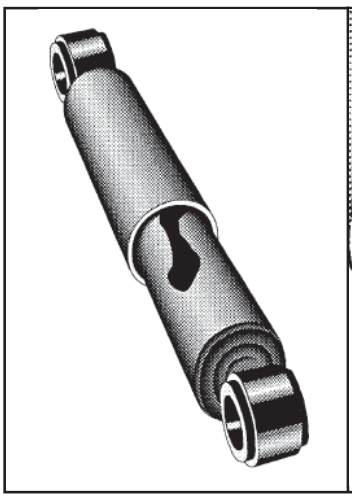

L
Derrames
(Limpie los amortiguadores para quitar las suciedades de la carretera)

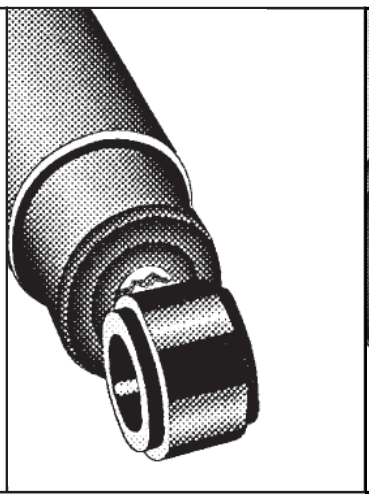

UMB
LMB
Quebradura en la fijación superior o inferior

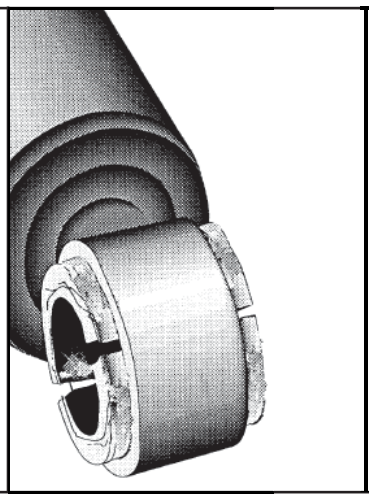

UBB
LBB
Quebradura del buje superior o inferior

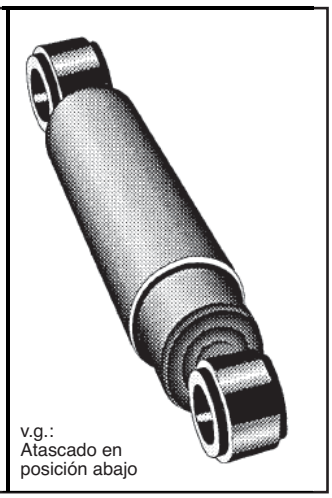

BI
S
Quebradura interna (bloqueo)

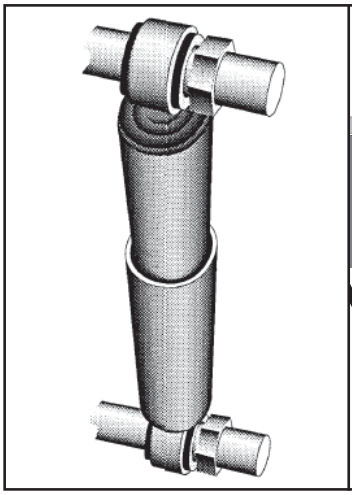

II
Instalación inadecuada
(ej. amortiguador instalado al revés)

RC
Empeoramiento de la conducción

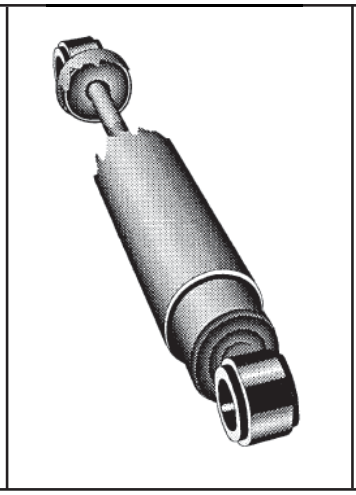

DT
Quebradura en el tubo guarda polvo

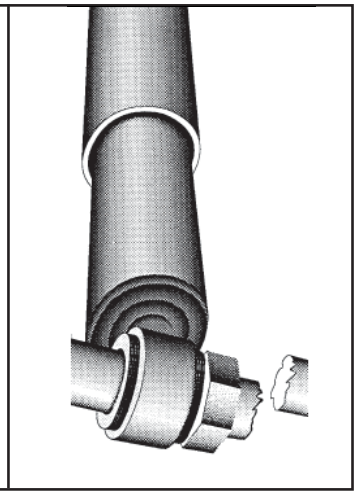

TMF
Falla en la fijación del camión

Gabriel®
COMMERCIAL VEHICLE

an *ArvinMeritor* brand

Guía para la inspección de AMORTIGUADORES DE CAMIONES

A la larga, el mantenimiento continuo y programado de los amortiguadores no se traduce en gasto, sino en ¡ahorro!

Al igual que con la mayoría de los componentes del chasis, un programa de mantenimiento continuo y programado para los amortiguadores ayudará a evitar períodos de paralización no programados, y reducir los costos totales de mantenimiento.

El propósito del amortiguador ha cambiado dramáticamente. Hasta hace pocos años, la mayoría de las suspensiones consistían de resortes pesados con láminas múltiples, con desplazamiento limitado y gran fricción intrínseca. Estas suspensiones autoamortiguaban rápidamente, limitando la cantidad de trabajo que el amortiguador tenía que realizar.

Las suspensiones de fricción baja, tales como las de aire y de hoja ahusada, han cambiado dramáticamente el propósito del amortiguador. Actualmente, los amortiguadores juegan un papel crítico amortiguando la oscilación de la suspensión.

Los amortiguadores que funcionan correctamente pueden ayudar a reducir el desgaste de muchos componentes costosos de la suspensión, tales como las bolsas de aire, mientras ayudan en la reducción del desgaste de los neumáticos y daños de vibración de la cabina y del chasis. Ellos también ayudan a reducir el cansancio del conductor. Simplemente, los amortiguadores desgastados no pueden ayudar a proporcionar un control con los sofisticados sistemas de suspensión de hoy.

¿Cuándo se deben reemplazar los amortiguadores?

Existen bastantes síntomas que indican que **puede** ser el momento de cambiar los amortiguadores.

Inspeccione en busca de:

Desgaste desigual de los neumáticos - El contrapeso se debe verificar primero
Empeoramiento de la conducción
Exceso de vibración
Combadura de los resortes de láminas ahusadas - Esto no es causado por amortiguadores poco fuertes
Desgaste prematuro de componentes de la cabina y de los sistemas eléctrico y de refrigeración
Resortes neumáticos fracturados o rotos - Los amortiguadores afectarán esto solamente si ellos están rotos o no están

AMORTIGUADORES CON VAPOR V/S AMORTIGUADORES CON FUGAS

Los amortiguadores con vapor son a menudo diagnosticados equivocádamente como defectuosos. La formación de vapor es el proceso por el cual pequeñas cantidades de fluido del amortiguador se evaporan a temperaturas de operación elevadas a través del sello superior del amortiguador. Cuando el "vapor " hace contacto con el aire exterior más frío, se condensa y forma una película externa en el exterior del cuerpo del amortiguador. Cuando esta película se mezcla con el polvo y los desechos de la carretera, una mugre a menudo cubre todo el cuerpo del amortiguador. La formación de vapor es una función perfectamente normal y necesaria del amortiguador. El fluido que se evapora a través de la área del sello ayuda a lubricar el sello y prolonga su duración.

A muchos técnicos se les hace difícil diferenciar entre un amortiguador con vapor, y uno realmente con fugas que se necesita reemplazar. Un amortiguador con fugas mostrará clara evidencia de fugas de fluido en forma de chorros provenientes del sello superior. Estos chorros se pueden ver más fácilmente cuando el amortiguador está totalmente extendido, y de esta manera, el técnico puede inspeccionar mejor el cuerpo principal del amortiguador (debajo de la cubierta o tubo de polvo) según sea posible.

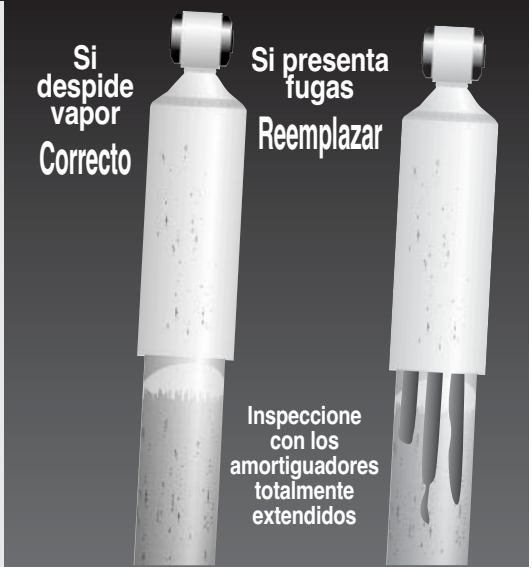

Realice el ENSAYO DE TEMPERATURA

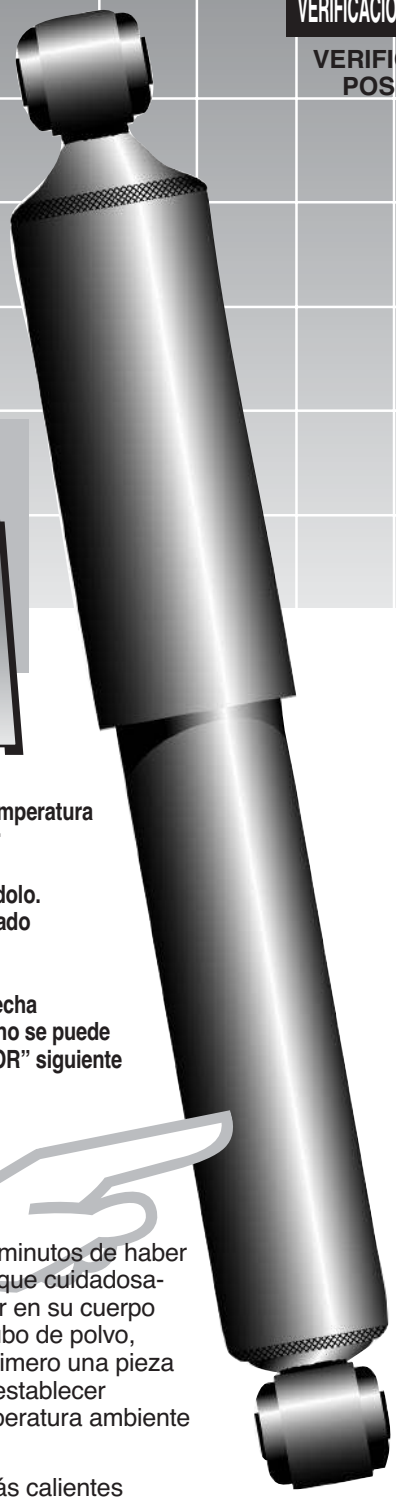

Los amortiguadores funcionan a temperaturas que varían desde la temperatura ambiente hasta 350°F. El propósito de un amortiguador es amortiguar la oscilación de los resortes del camión. El amortiguador realiza esto transformando la energía producida por el resorte en calor, y disipándolo. Como consecuencia, al tacto, el amortiguador debería estar de templado a caliente después del uso normal.

Si se experimenta empeoramiento en la conducción, y existe la sospecha de que un amortiguador ha fallado internamente, lo que visualmente no se puede detectar, realice el "ENSAYO DE TEMPERATURA DEL AMORTIGUADOR" siguiente después de unos pocos minutos de funcionamiento del equipo:

1 Conduzca el vehículo a velocidades moderadas por lo menos durante 15 minutos.

2 Después de unos pocos minutos de haber conducido el vehículo, toque cuidadosamente cada amortiguador en su cuerpo debajo de la cubierta o tubo de polvo, luego de haber tocado primero una pieza cercana del chasis para establecer una referencia de la temperatura ambiente del metal.

3 Todos los amortiguadores deberían estar más calientes que el chasis. Sospeche de una falla en cualquier amortiguador que esté notablemente más frío que su pareja en el otro extremo del eje. Temperaturas diferentes de eje a eje no indican fallas, pero temperaturas más frías en cualquiera de los ejes justifica la acción de quitar y examinar el amortiguador más frío.

4 Para inspeccionar en busca de fallas internas, quite y agite el amortiguador sospechoso. Preste atención para escuchar si suenan piezas de metal sacudiéndose en el interior. El sonido de piezas de metal pueden indicar que el amortiguador tiene una falla interna.

VERIFICACIONES VISUALES DEL AMORTIGUADOR

VERIFIQUE LOS SIGUIENTES POSIBLES PROBLEMAS

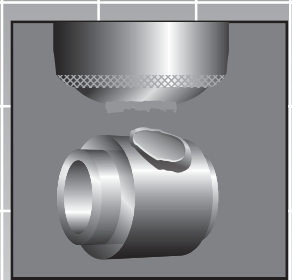

Soporte superior o inferior roto

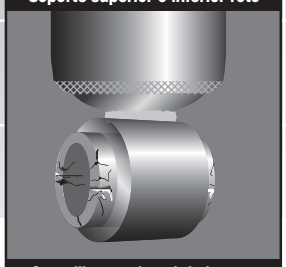

Casquillo superior o inferior roto
Estos se pueden reemplazar muy fácilmente, y están considerados como elementos de mantenimiento periódico en un amortiguador.

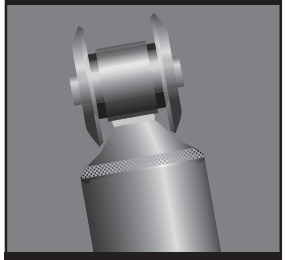

Instalación incorrecta
Por ejemplo, arandelas instaladas al revés.

Tubo de polvo roto

Doblado/abollado

ArvinMeritor™

Meritor Heavy Vehicle Systems, LLC
7975 Dixie Highway
Florence, KY 41042 USA
888-725-9355
www.arvinmeritor.com

© Copyright 2002
ArvinMeritor, Inc.

Made in Canada

A9917S
ISO 9001 & QS-9000 Registered

Instrucciones Para La Eliminación De Amortiguadores Gabriel De Camiones

Observación General

Cuando se saca el aceite y el gas de amortiguadores defectuosos o desechados, se deben tomar medidas correctas de protección, tales como el uso de lentes de seguridad y guantes protectores.

PROCEDIMIENTO:

1. Asegure el amortiguador en una posición horizontal.
2. Extienda completamente el vástago del émbolo antes de perforar la unidad.
3. Usando una broca de 1/8 pulg. (3 mm), haga un agujero en dirección hacia abajo a 1.0 pulg. (25 mm) aproximadamente de la parte inferior del amortiguador, a una profundidad de alrededor de 1 pulg. (25 mm) (vea la fig. A).
4. Haga un segundo agujero de 1/8 pulg. (3 mm) a 2 pulg. (50 mm) de la parte superior del amortiguador a una profundidad de alrededor de 1.0 pulg. (25 mm), con el fin de permitir que salga todo el aceite (vea la fig. B).
5. Moviendo el vástago del émbolo hacia adentro y hacia afuera, produzca emboladas en la unidad para purgar completamente el aceite del cilindro (vea la fig. C).

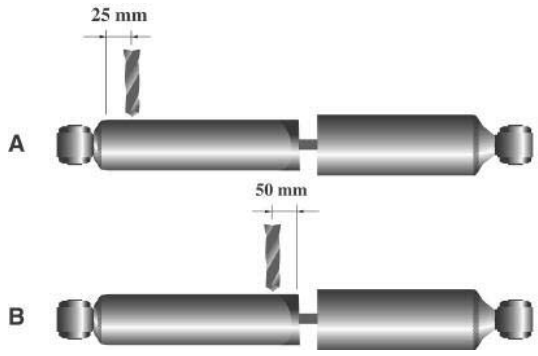

Advertencia: En los amortiguadores cargados con gas, es importante cubrir la área donde se está haciendo el agujero con una toalla o algún tipo de protección, para prevenir rociar gas y aceite durante la penetración inicial de la broca.

Información Ambiental

6. Acumule todo el aceite usado, **teniendo cuidado de no mezclarlo con algún otro desecho o basura**. Guárdelo en recipientes aprobados, identificados con etiquetas de “ACEITE USADO”.
7. Deseche el resto del cuerpo del amortiguador, y las piezas internas, de acuerdo con la legislación federal o provincial concerniente al aceite de desecho y otros desechos.
8. Guarde, elimine y/o transporte el aceite usado de acuerdo con las regulaciones ambientales, y el programa de aceite usado de su estado o provincia.

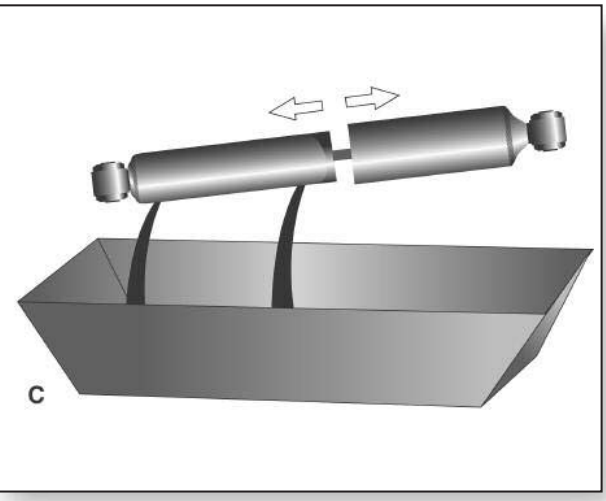

El aceite usado de amortiguador se debe desechar en un recipiente utilizado para reciclar aceites de motores. Información acerca de dónde desechar el aceite y otras piezas se puede obtener de autoridades ambientales o de proveedores de aceites.

Política de garantía de los amortiguadores Gabriel

Programa de camiones pesados

Garantía comercial

ArvinMeritor, fabricante de los amortiguadores Gabriel, garantiza

GasSLX sus amortiguadores GasSLX (serie 89000) contra todo defecto de fabricación durante dos años, a partir de la fecha de compra o por 200 000 millas (320 000 km), según lo que ocurra primero, y.

FLEETLINE sus amortiguadores FLEETLINE (series 83000, 85000, 85300, 85700, 85900 y 87000) contra todo defecto de fabricación durante un año a partir de la fecha de compra, sin límite de kilómetros.

ESTE GARANTIA COMERCIAL SE LIMITA AL REEMPLAZO DEL PRODUCTO DEFECTUOSO SOLAMENTE. Los gastos de expedición, sacado e instalación no son incluidos. Este garantía se aplica al comprador original, bajo condiciones normales de funcionamiento.

Las estipulaciones de este garantía no se aplican a un producto a) instalado en un vehículo registrado o utilizado para carreras automóviles o con fines competitivos, b) utilizado con fines contrarios a su diseño, c) modificado o sometido a un uso abusivo, negligente o accidental, d) cuya instalación es inadecuada.

Garantía no comercial

ArvinMeritor, fabricante de los amortiguadores Gabriel, garantiza sus:

Amortiguadores GAS Light Truck (serie G60000) contra todo defecto de fabricación, durante un año a partir de la fecha de compra o por 25 000 millas (40 000 km), según lo que ocurra primero. La presente garantía se aplica al comprador original y se limita a las camionetas y furgonetas privadas de pasajeros, bajo condiciones normales de funcionamiento.

ESTE GARANTIA SE LIMITA AL REEMPLAZO DEL PRODUCTO DEFECTUOSO SOLAMENTE. Los gastos de expedición, sacado e instalación no son incluidos.

Las estipulaciones de este garantía no se aplican a un producto a) instalado en un vehículo registrado o utilizado con fines comerciales, de automóviles de carreras o competencias, b) utilizado con fines contrarios a su diseño, c) modificado o sometido a un uso abusivo, negligente o accidental, d) cuya instalación es inadecuada.

Gabriel®
COMMERCIAL VEHICLE
an ArvinMeritor brand

FLEETLINE → GasSLX

Interchange
Intercambio
Échange

Fleetline	Gabriel GasSLX Upgrade
83122	89406
83123	89405
83124	89407
83126	89430
83203	89436
83207	89407
83209	89414
83308	89435
83309	89446
83312	89409
83456	89447
85000	89436
85001	89410
85003	89411
85005	89430
85006	89401
85007	89412
85012	89413
85013	89414
85023	89415
85024	89416
85026	89417
85027	89418
85030	89440
85033	89427
85036	89405
85046	89434
85047	89435
85053	89442
85054	89438
85055	89439
85058	89431
85061	89450
85062	89408
85066	89448
85067	89451
85069	89455
85300	89419
85302	89420
85303	89422
85308	89422
85310	89423
85311	89424
85314	89425
85316	89426
85319	89428
85320	89429
85323	89436
85724	89443
85918	89449
85932	89453
85933	89454
85936	89456

GasSLX ✕ FLEETLINE

IMPORTANT NOTE: Interchange must only be used for FLEETLINE to GASSLX upgrade. Interchange is **NOT REVERSABLE.**

NOTA IMPORTANTE: El intercambio se debe utilizar solamente de FLEETLINE a GASSLX mejorado. El intercambio **NO ES REVERSIBLE.**

REMARQUE IMPORTANTE: L'échange ne peut se faire que pour le surclassement du FLEETLINE au GASSLX. L'échange **N'EST PAS RÉVERSIBLE.**

Gabriel®
COMMERCIAL VEHICLE
an ArvinMeritor brand

HOW TO DETERMINE THE CORRECT SHOCK FOR YOUR TRUCK

COMO ESCOGER EL MEJOR AMORTIGUADOR PARA SU CAMIÓN

COMMENT CHOISIR LE BON AMORTISSEUR POUR VOTRE CAMION.

STEP 1: **Measure the diameter of the dust tube and cylinder to determine the series.**

1ER PASO **Mida el diámetro del tubo de polvo y del cilindro para determinar la serie.**

1RE ÉTAPE **Mesurez le diamètre du tube de poussière et du cylindre pour déterminer la série.**

EXTERNAL DIMENSIONS
DIMENSIONES EXTERNAS DIMENSIONS EXTÉRIEURES

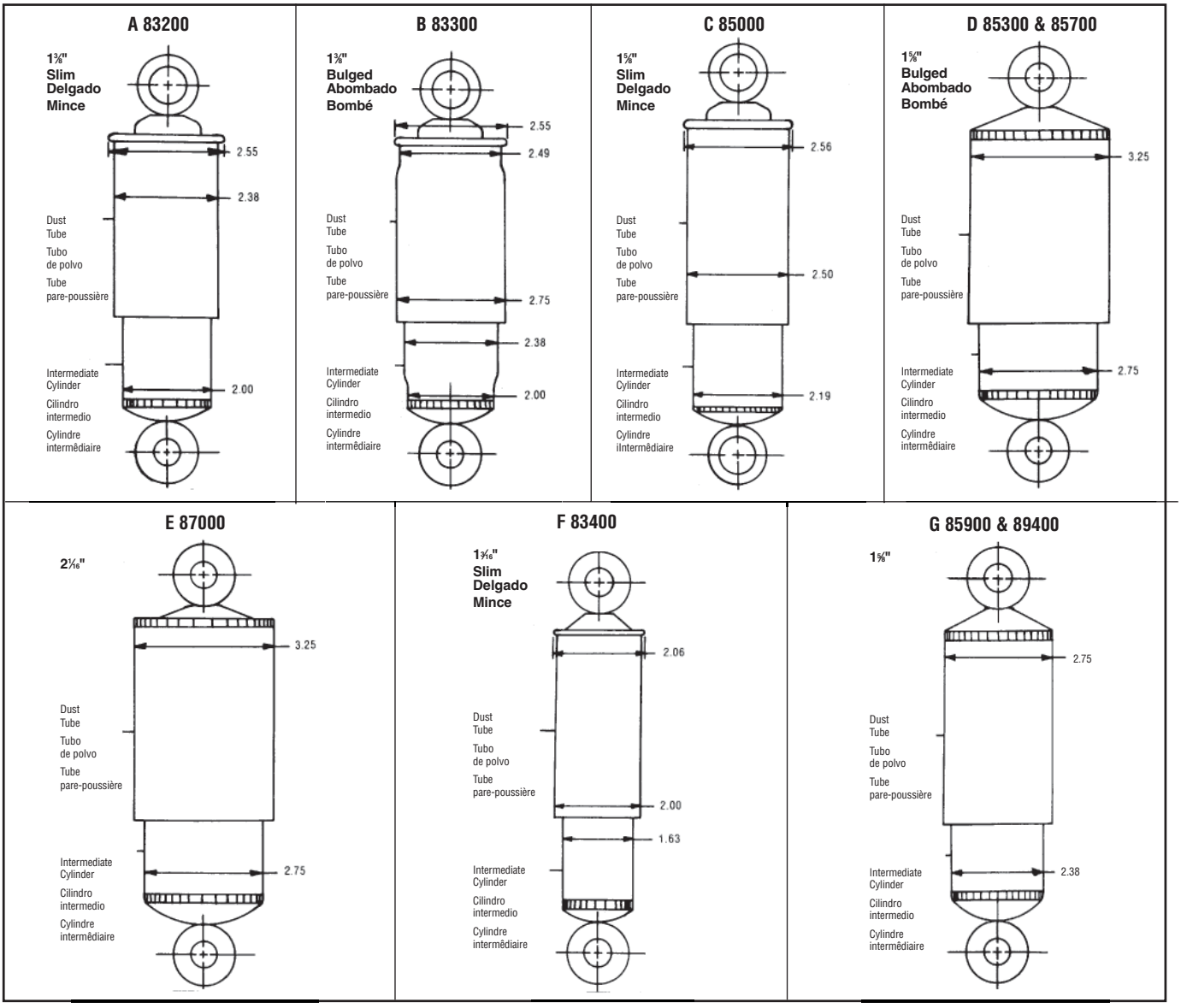

STEP 2: Identify the mounting style. Measure fully extended and fully collapsed lengths at the locations indicated for mounting style.

2° PASO Identifique el método de fijación. Mida la extensión maxima y la compresión maxima en los lugares indicados para la fijación.

2E ÉTAPE Identifiez la méthode de fixation. Mesurez la longueur en pleine extension et en pleine compression, aux endroits indiqués pour la méthode de fixation.

HOW TO MEASURE EXTENDED & COLLAPSED LENGTHS OF SHOCK ABSORBERS
COMO MEDIR LAS LONGITUDES EXTENDIDA Y COMPRIMIDA DE LOS AMORTIGUADORES
COMMENT MESURER LES LONGUEURS ALLONGÉ ET COMPRIMÉ DES AMORTISSEURS

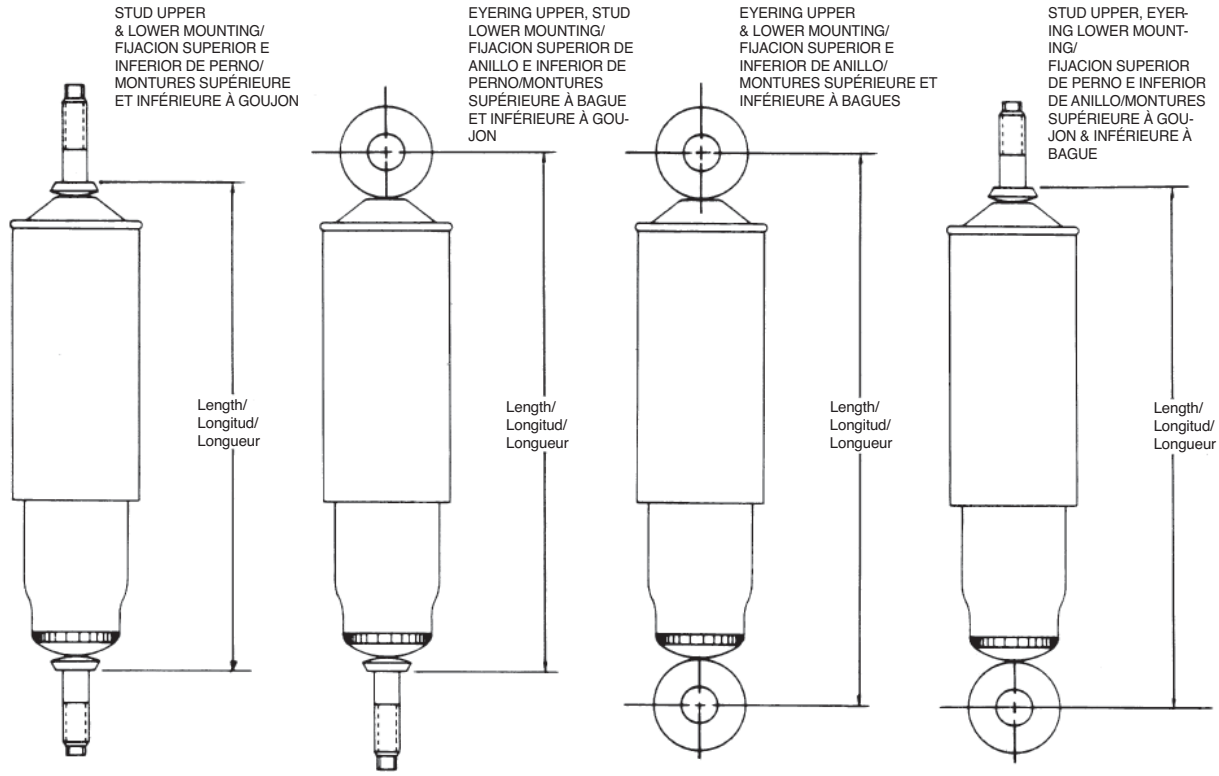

INSTRUCTIONS:

1. Using the proper measuring points as shown above find the nearest replacement shock absorber from the listing by increments of extended length.
2. Identify the proper mounting from the mounting codes and match these requirements by carefully measuring the mounting dimensions (top and bottom) of the shock absorber to be replaced.
3. Carefully take note of the following requirements:
   a. **Dust tubes** - This requirement should be noted in comparison with the shock absorber to be replaced. Shock absorber environment in its application makes this requirement necessary for piston rod protection and extended shock absorber life.
   b. **Recoil Cutoff and Compression Bumper** - Carefully note these specifications - deviation of length requirements should not exceed ± ¼". These shock absorber designs are footnoted for easy identification.

Note: Shock Absorbers used for installations other than those recommended in our catalog are **not subject to warranty.**

INSTRUCCIONES :

1. Usando los puntos de medida adecuados como mencionado, encuentre el amortiguador más cercano en la lista por incrementos de la longitud extendida.
2. Identifique la fijación adecuada por medio de los códigos de fijación y compare estas especificaciones, midiendo cuidadosamente las dimensiones de la fijación (superior e inferior) del amortiguador por reemplazar.
3. Note cuidadosamente las exigencias siguientes :
   a. **Guarda polvo** : esta exigencia debe notarse en comparación con el amortiguador por reemplazar. Esta exigencia es necesaria en cuanto a los amortiguadores para proteger al vástago del pistón y extender la duración del amortiguador.
   b. **Tope de retorno y tope de compresión**. Note cuidadosamente las especificaciones siguientes : las exigencias de longitud no deben de ser excedidas ± ¼". Estos diseños de amortiguadores están marcados para facilitar su identificación.

Nota : Los amortiguadores usados para instalaciones otras que las recomendadas en nuestro catálogo **no son garantizados.**

INSTRUCTIONS:

1. En utilisant les points de mesure appropriés comme indiqués ci-dessus, trouvez l'amortisseur de rechange le plus près de cette mesure d'après la longueur allongée.
2. Repérez les montures appropriées sur les codes des montures et faites correspondre ces exigences en mesurant attentivement les dimensions des montures (haut et bas) de l'amortisseur à replacer.
3. Avec soin, prenez note des exigences suivantes:
   a. **Tubes pare-poussière** - Cette exigence devrait être notée en comparaison de l'amortisseur à remplacer. Le milieu de service rend cette exigence nécessaire pour la protection de la tige de piston et une meilleure longévité de l'amortisseur.
   b. **Arrêt de retour et butée de compression** - Notez avec soin ces spécifications. La déviation par rapport aux exigences de longueurs ne doit pas dépasser ± ¼ po. Ces modèles d'amortisseurs portent une note pour une identification facile.

Note: Les amortisseurs utilisés pour des installations autres que celles recommandées dans notre catalogue **ne sont pas couverts par la garantie.**

STEP 3: Measure end mount diameters, widths, and lengths. Refer to the following Endmount tables to determine the appropriate or matching mounting code

3ER PASO Mida las dimensiones del tubo, así como el diámetro, la anchura y la longitud de las fijaciones. Consulte las tablas siguientes de conteras para determinar el código de montaje apropiado o concorde

3E ÉTAPE Mesurez le diamètre, la largeur et la longueur des bagues. Consultez les tableaux d'embouts suivants afin d'établir le code de montage approprié ou concordant

MOUNTING CODE "EB" EYERING AND BUSHING
CODIGO DE FIJACION «EB» - ANILLO Y BUJE CODE DE MONTURE «EB» À BAGUE ET MANCHON

EB1

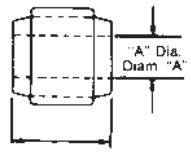

FREE LENGTH "B"
COMP LENGTH "C"
LONGITUD LIBRE "B"
LONGITUD COMPRIMIDA "C"
LONGUEUR NON COMP "B"
LONGUEUR COMP "C"

EB2

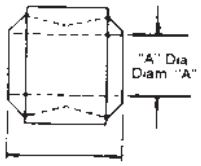

FREE LENGTH "B"
COMP LENGTH "C"
LONGITUD LIBRE "B"
LONGITUD COMPRIMIDA "C"
LONGUEUR NON COMP "B"
LONGUEUR COMP "C"

EB3

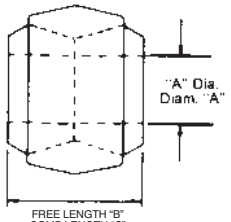

FREE LENGTH "B"
COMP LENGTH "C"
LONGITUD LIBRE "B"
LONGITUD COMPRIMIDA "C"
LONGUEUR NON COMP "B"
LONGUEUR COMP "C"

EB4

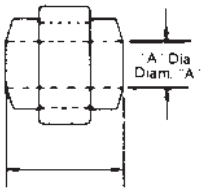

FREE LENGTH "B"
COMP LENGTH "C"
LONGITUD LIBRE "B"
LONGITUD COMPRIMIDA "C"
LONGUEUR NON COMP "B"
LONGUEUR COMP "C"

EB6

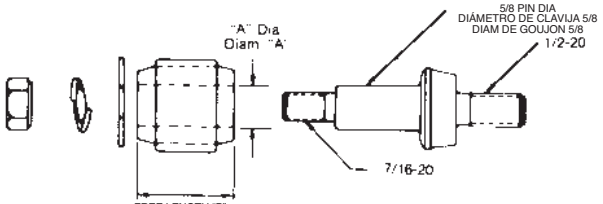

FREE LENGTH "B"
COMP LENGTH "C"
LONGITUD LIBRE "B"
LONGITUD COMPRIMIDA "C"
LONGUEUR NON COMP "B"
LONGUEUR COMP "C"

EB5

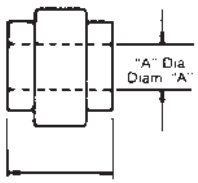

FREE LENGTH "B"
COMP LENGTH "C"
LONGITUD LIBRE "B"
LONGITUD COMPRIMIDA "C"
LONGUEUR NON COMP "B"
LONGUEUR COMP "C"

EB7

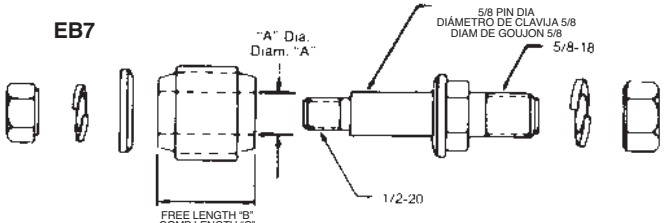

FREE LENGTH "B"
COMP LENGTH "C"
LONGITUD LIBRE "B"
LONGITUD COMPRIMIDA "C"
LONGUEUR NON COMP "B"
LONGUEUR COMP "C"

EB8

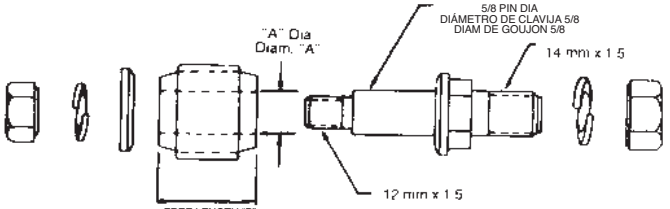

FREE LENGTH "B"
COMP LENGTH "C"
LONGITUD LIBRE "B"
LONGITUD COMPRIMIDA "C"
LONGUEUR NON COMP "B"
LONGUEUR COMP "C"

Mounting Code Código de fijación Code de monture	"A" Dia. Diámetro "A" Diam. "A"	B Free Length Longitud libre Long. non comp.	C Comp. Length Longitud comprimida Long. comp.	Vehicle Mounting Pin Dia. Diámetro de clavija de fijación del vehículo Diam. du goujon de montage du véhicule
EB1	5/8	1.44	1.31/1.25	5/8
EB2	3/4	1.75	1.50	3/4
EB3	1	1.91	1.75	1
EB4	11/16	1.72	1.55	11/16
EB5	5/8	1.51	1.25	5/8
EB6	5/8	1.44	1.31/1.25	Mounting pin furnished with shock absorber for 1/2" dia. vehicle mounting hole. Clavija de fijación provista con amortiguador para agujero de montaje de 1/2" de diámetro en el vehículo. Goujon de montage fourni avec l'amortisseur pour trou de montage de 1/2 po de diam. sur véhicule.
EB7	5/8	1.44	1.31/1.25	Mounting pin furnished with shock absorber for 5/8" dia. vehicle mounting hole. Clavija de fijación provista con amortiguador para agujero de montaje de 5/8" de diámetro en el vehículo. Goujon de montage fourni avec l'amortisseur pour trou de montage de 5/8 po de diam. sur véhicule.
EB8	5/8	1.44	1.31/1.25	Mounting pin furnished with shock absorber for 14 mm dia. vehicle mounting hole. Clavija de fijación provista con amortiguador para agujero de montaje de 14 mm de diámetro en el vehículo. Goujon de montage fourni avec l'amortisseur pour trou de montage de 14 mm de diam. sur véhicule.

MOUNTING CODE "BP" EYERING AND BUSHING WITH BAR PIN
CODIGO DE FIJACION «BP» ANILLO Y BUJE CON CLAVIJA TIPO BARRA
CODE DE MONTURE "BP" BAGUE ET MANCHON AVEC GOUPILLE

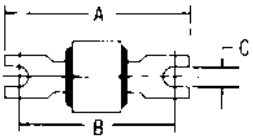

Type 1/Tipo 1

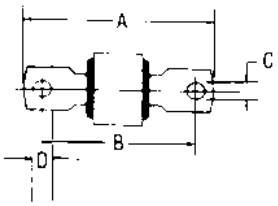

Type 2 /Tipo 2

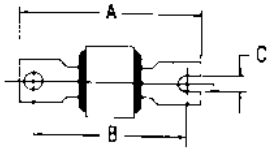

Type 3 /Tipo 3

Code	Type	A	B	C	D	Code	Type	A	B	C	D
BP1	1	2.72	2.20	0.33	---	BP16	2	3.70	2.91	0.35	0.44
BP3	1	2.82	2.38	0.33	---	BP17	1	3.11	2.61	0.33	---
BP4	1	3.19	2.38	0.33	---	BP18	1	3.75	3.14	0.39	---
BP5	1	3.19	2.75	0.33	---	BP19	1	3.19	2.62	0.33	---
BP6	1	4.25	3.62	0.33	---	BP20	1	3.59	3.12	0.33	---
BP7	2	3.13	2.50	0.35	0.42	BP26	3	3.06	2.37	0.26	---
BP8	2	3.50	2.87	0.35	0.42	BP27	2	4.00	2.95	0.52	---
BP11	1	2.96	2.52	0.33	---	BP30	1	3.00	2.25	0.34	---
BP12	1	3.75	3.14	0.33	---	BP31	3	3.50	2.87	0.35	---
BP13	1	3.45	3.00	0.33	---	BP32	2	3.45	2.83	0.42	---
BP14	2	3.43	2.87	0.43	---	BP33	2	3.50	2.87	0.35	0.42

MOUNTING CODE "ES" & "CB" EYERING AND BUSHING WITH STEEL SLEEVE
CODIGO DE FIJACION «ES» Y «CB» ANILLO Y BUJE CON CAMISA DE ACERO
CODE DE MONTURE "ES" & "CB" BAGUE ET MANCHON AVEC COLLET EN ACIER

TYPE 1/TIPO 1 CENTERED IN EYERING
CENTRADO EN EL ANILLO
CENTRÉ DANS LA BAGUE

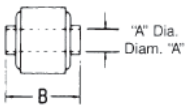

TYPE 2/TIPO 2 OFFSET IN EYERING
DESCENTRADO EN EL ANILLO
DÉCALÉ SUR LA BAGUE

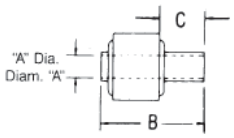

TYPE 3/TIPO 3 CAPTURED BUSHING
BUJE CAPTURADO
MANCHON PRISONNIER

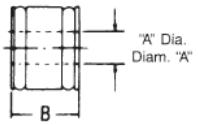

Code	Type	"A" Dia.	B	C
ES160	1	1.00	2.01	---
ES22	1	½	1.25	---
ES23	1	½	1.31	---
ES24	1	½	1.38	---
ES25	1	½	1.48	---
ES26	1	½	1.56	---
ES27	1	½	1.62	---
ES31	2	½	2.25	1.00
ES32	1	½	3.34	---
ES45	1	½	1.53	---
ES82	1	½	1.67	---
ES91	1	½	2.00	---
ES94	1	½	2.10	---
ES126	1	½	2.44	---
ES128	1	½	1.66	---
ES130	1	½	1.56	---
ES149	1	½	2.36	---
ES151	1	½	2.44	---
ES157	2	½	2.05	0.95
ES164	1	½	2.26	---
ES165	1	½	1.75	---
ES171	1	½	1.88	---
ES172	1	½	2.72	---
ES36	1	¾	1.75	---
ES120	1	¾	2.76	---
ES121	1	¾	2.06	---
ES150	1	¾	2.24	---
ES158	1	¾	3.80	---
ES159	2	¾	3.21	1.03
ES178	1	¾	1.96	---
ES35	1	⅝	1.38	---
ES90	1	⅝	2.00	---
ES136	1	⅝	1.75	---
ES161	1	⅝	3.95	---
Code	**Type**	**"A" Dia.**	**B**	**C**
ES162	1	⅝	2.60	---
ES166	1	⅝	2.97	---
ES174	1	⅝	3.25	---
ES8	1	7⁄16	1.25	---
ES9	1	7⁄16	1.31	---
ES10	1	7⁄16	1.38	---
ES11	1	7⁄16	1.50	---
ES12	1	7⁄16	1.62	---
ES14	1	7⁄16	1.88	---
ES16	1	7⁄16	3.15	---
ES38	1	7⁄16	2.16	---
ES40	1	7⁄16	3.38	---
ES145	1	7⁄16	2.25	---
ES163	1	7⁄16	2.50	---
ES173	1	⅞	2.28	---
ES34	1	9⁄16	1.66	---
ES87	1	9⁄16	1.62	---
ES143	1	9⁄16	1.60	---
CB6	3	10 mm	1.59	---
ES1	1	10 mm	1.25	---
ES2	1	10 mm	1.42	---
ES3	1	10 mm	1.56	---
ES4	1	10 mm	1.97	---
ES5	1	10 mm	2.07	---
ES6	1	10 mm	2.36	---
ES39	1	10 mm	1.31	---
ES44	1	10 mm	2.28	---
ES53	1	10 mm	1.38	---
ES84	1	10 mm	1.62	---
ES106	1	10 mm	1.48	---
ES109	1	10 mm	0.95	---
ES115	1	10 mm	2.02	---
ES116	1	10 mm	1.24	---
ES170	1	10 mm	1.18	---
Code	**Type**	**"A" Dia.**	**B**	**C**
ES17	1	12 mm	1.25	---
ES18	1	12 mm	1.65	---
ES19	1	12 mm	1.88	---
ES20	1	12 mm	1.95	---
ES21	1	12 mm	2.28	---
ES37	1	12 mm	1.01	---
ES46	2	12 mm	1.88	0.62
ES54	1	12 mm	2.91	---
ES55	1	12 mm	1.56	---
ES61	1	12 mm	1.76	---
ES69	1	12 mm	1.58	---
ES83	1	12 mm	1.48	---
ES85	1	12 mm	2.36	---
ES107	1	12 mm	2.15	---
ES112	1	12 mm	1.08	---
ES114	1	12 mm	2.04	---
ES133	1	12 mm	1.93	---
ES141	1	12 mm	1.61	---
ES56	1	14 mm	1.38	---
ES60	1	14 mm	1.26	---
ES64	1	14 mm	1.19	---
ES86	1	14 mm	2.44	---
ES153	1	14 mm	1.55	---
ES167	1	14 mm	2.31	---
ES168	1	14 mm	2.62	---
ES169	1	14 mm	1.91	---
ES110	1	16 mm	1.61	---
ES113	1	16 mm	1.49	---
ES175	1	16 mm	1.96	---
ES176	1	16 mm	3.72	---
ES177	1	16 mm	3.55	---
ES104	1	20 mm	1.58	---
ES152	1	20 mm	1.69	---

Code	Type	"A" Dia.	B	C
CB6	3	10 mm	1.59	---
ES1	1	10 mm	1.25	---
ES2	1	10 mm	1.42	---
ES3	1	10 mm	1.56	---
ES4	1	10 mm	1.97	---
ES5	1	10 mm	2.07	---
ES6	1	10 mm	2.36	---
ES8	1	7⁄16	1.25	---
ES9	1	7⁄16	1.31	---
ES10	1	7⁄16	1.38	---
ES11	1	7⁄16	1.50	---
ES12	1	7⁄16	1.62	---
ES14	1	7⁄16	1.88	---
ES16	1	7⁄16	3.15	---
ES17	1	12 mm	1.25	---
ES18	1	12 mm	1.65	---
ES19	1	12 mm	1.88	---
ES20	1	12 mm	1.95	---
ES21	1	12 mm	2.28	---
ES22	1	½	1.25	---
ES23	1	½	1.31	---
ES24	1	½	1.38	---
ES25	1	½	1.48	---
ES26	1	½	1.56	---
ES27	1	½	1.62	---
ES31	2	½	2.25	1.00
ES32	1	½	3.34	---
ES34	1	9⁄16	1.66	---
ES35	1	⅝	1.38	---
ES36	1	¾	1.75	---
ES37	1	12 mm	1.01	---
ES38	1	7⁄16	2.16	---
ES39	1	10 mm	1.31	---
ES40	1	7⁄16	3.38	---
Code	**Type**	**"A" Dia.**	**B**	**C**
ES44	1	10 mm	2.28	---
ES45	1	½	1.53	---
ES46	2	12 mm	1.88	0.62
ES53	1	10 mm	1.38	---
ES54	1	12 mm	2.91	---
ES55	1	12 mm	1.56	---
ES56	1	14 mm	1.38	---
ES60	1	14 mm	1.26	---
ES61	1	12 mm	1.76	---
ES64	1	14 mm	1.19	---
ES69	1	12 mm	1.58	---
ES82	1	½	1.67	---
ES83	1	12 mm	1.48	---
ES84	1	10 mm	1.62	---
ES85	1	12 mm	2.36	---
ES86	1	114 mm	2.44	---
ES87	1	9⁄16	1.62	---
ES90	1	⅝	2.00	---
ES91	1	½	2.00	---
ES94	1	½	2.10	---
ES104	1	20 mm	1.58	---
ES106	1	10 mm	1.48	---
ES107	1	12 mm	2.15	---
ES109	1	10 mm	0.95	---
ES110	1	16 mm	1.61	---
ES112	1	12 mm	1.08	---
ES113	1	16 mm	1.49	---
ES114	1	12 mm	2.04	---
ES115	1	10 mm	2.02	---
ES116	1	10 mm	1.24	---
ES120	1	¾	2.76	---
ES121	1	¾	2.06	---
ES126	1	½	2.44	---
ES128	1	½	1.66	--
Code	**Type**	**"A" Dia.**	**B**	**C**
ES130	1	½	1.56	---
ES133	1	12 mm	1.93	---
ES136	1	⅝	1.75	---
ES141	1	12 mm	1.61	---
ES143	1	9⁄16	1.60	---
ES145	1	7⁄16	2.25	---
ES149	1	½	2.36	---
ES150	1	¾	2.24	---
ES151	1	½	2.44	---
ES152	1	20 mm	1.69	---
ES153	1	14 mm	1.55	---
ES157	2	½	2.05	0.95
ES158	1	¾	3.80	---
ES159	2	¾	3.21	1.03
ES160	1	1.00	2.01	---
ES161	1	⅝	3.95	---
ES162	1	⅝	2.60	---
ES163	1	7⁄16	2.50	---
ES164	1	½	2.26	---
ES165	1	½	1.75	---
ES166	1	⅝	2.97	---
ES167	1	14 mm	2.31	---
ES168	1	14 mm	2.62	---
ES169	1	14 mm	1.91	---
ES170	1	10 mm	1.18	---
ES171	1	½	1.88	---
ES172	1	½	2.72	---
ES173	1	⅞	2.28	---
ES174	1	⅝	3.25	---
ES175	1	16 mm	1.96	---
ES176	1	16 mm	3.72	---
ES177	1	16 mm	3.55	---
ES178	1	¾	1.96	---

MOUNTING CODES “S” & “DS” STUD MOUNTS
CODIGOS DE FIJACION «S» Y «DS» FIJACIONES DE DOBLE PERNO
CODES DE MONTURE “S” & “DS” À GOUJON

S

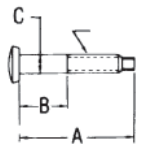

D (Thread Size)
D (Tamaño de filete)
D (Filet)

DS

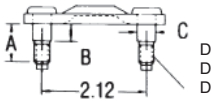

D (Thread Size)
D (Tamaño de filete)
D (Filet)

Code	A	B	C	D	Code	A	B	C	D	Code	A	B	C	D
DS1	1.25	0.44	3/8	5/16 - 24	S13	2.06	1.35	3/8	3/8 - 24	S33	3.44	2.17	10 mm	10 mm
S1	2.37	1.00	3/8	3/8 - 24	S14	2.25	1.33	7/16	3/8 - 24	S36	1.24	0.65	3/8	3/8 - 24
S2	2.06	1.00	3/8	3/8 - 24	S16	2.95	1.45	16 mm	16 x 1.5	S38	2.75	1.70	14 mm	12 mm
S4	1.75	1.00	3/8	3/8 - 24	S17	2.15	1.03	7/16	3/8 - 24	S39	3.55	1.75	5/8	5/8 - 18
S6	2.58	1.47	7/16	3/8 - 24	S21	3.28	1.75	5/8	5/8 - 18	S40	2.52	1.33	7/16	3/8 - 24
S7	1.97	1.00	3/8	3/8 - 24	S23	1.84	1.05	3/8	3/8 - 24	S41	3.48	2.32	5/8	1/2 - 20
S10	2.37	1.33	7/16	3/8 - 24	S28	2.34	1.33	7/16	3/8 - 16	S42	3.50	2.00	5/8	5/8 - 18
S11	2.37	1.21	7/16	3/8 - 24	S29	2.99	1.87	3/8	3/8 - 24	S43	2.75	1.25	5/8	5/8 - 18
S12	2.37	1.15	7/16	3/8 - 24	S30	3.44	1.30	7/16	10 mm					

EXPLANATION OF COLUMN HEADINGS
EXPLICACION DE LOS TITULOS DE LAS COLUMNA
EXPLICATION DES EN-TÊTES DE COLONNES

SHOCK ABSORBER PART NUMBER:
The catalog number for the individual shock absorber.

EXTENDED LENGTH:*
The length of the shock absorber when it is fully extended. See “How to Measure” instructions.

COLLAPSED LENGTH:*
The length of the shock absorber when it is fully compressed.
See “How to Measure” instructions.

STROKE:
This is the approximate length of the stroke of the individual shock absorber being described.

MOUNTING CODES:
Indicates the type of mounting ends for the upper and lower end of each shock absorber.
They are listed as follows:
Stud Type Mounts (“S” & “DS”)
Eye Ring and Bushing Mounts (“EB”)
Eye Ring and Bushing with Sleeve Mounts (“ES”)
Eye Ring and Bushing with Bar Pin Mounts (“BP”)
Special Mounting Codes (“SP”)

DUST TUBE:
Indicates whether the shock absorber is supplied with a dust tube.

MOUNTING ACCESSORY PACKAGE NUMBER:
The part number of the Mount Accessory Package supplied with the shock absorber.

***NOTE:**
All dimensions shown are in inches

Número de parte del amortiguador :
El número de catálogo para el amortiguador individual

Longitud extendida :
La longitud del amortiguador cuando es totalmente extendido. Ver instrucciones «Cómo medir»

Longitud comprimida :
La longitud del amortiguador cuando es totalmente comprimido. Ver instrucciones «Cómo medir»

Carrera :
Es la longitud aproximada de la carrera del amortiguador descrito

Códigos de fijación :
Indica el tipo de montantes de fijación superior e inferior para cada amortiguador.
Se listan como sigue :
Fijaciones de tipo perno («S» y «DS»)
Fijaciones de anillo y buje («EB»)
Fijaciones de anillo y buje con camisa («ES»)
Fijaciones de anillo y buje con clavija («BP»)
Códigos de fijación especiales («SP»)

Tubo de polvo :
Indica si el amortiguador está provisto con un tubo de polvo.

Número de paquete de accesorios de fijación :
El número de parte del paquete de accesorios de fijación provisto con el amortiguador

***NOTA :**
Todas las dimensiones son en pulgadas

Numéro de pièce de l’amortisseur:
Le numéro de catalogue pour l’amortisseur individuel.

Longueur étirée:*
La longueur de l’amortisseur entièrement étiré. Voir “Comment mesurer”.

Longueur comprimée:*
La longueur de l’amortisseur entièrement comprimé. Voir “Comment mesurer”.

Course:
C’est la longueur approximative de la course de l’amortisseur individuel décrit.

Codes de monture:
Indique le type de montures supérieure et inférieure de chaque amortisseur.
Ils sont énumérés comme suit:
Montures de type goujon (“S” & “DS”)
Montures à bague et manchon (“EB”)
Montures à bague et manchon avec collet (“ES”)
Montures à bague et manchon avec goupille (“BP”)
Codes de montures spéciales (“SP”)

Tube pare-poussière:
Indique que l’amortisseur est fourni avec un tube pare-poussière.

Numéro d’emballage d’accessoires de montage:
Le numéro de pièce de l’emballage d’accessoires de montage fourni avec l’amortisseur.

***NOTE:**
Toutes les dimensions indiquées sont en pouces

STEP 4:

Refer to shock absorber specifications by end mount. Start first by finding the appropriate series. Next, match the extended/collapsed length and find the correct mounting codes. Refer to the far left column of the chart for the correct Gabriel Shock Absorber part number.

4º PASO

Consulte las especificaciones del amortiguador mostradas al final del catálogo. Encuentre primero la serie adecuada. Luego, compare las longitudes de extensión y de compresión, y encuentre los códigos de fijación correctos. Consulte la columna del extremo izquierdo de la tabla para identificar el número de parte del amortiguador Gabriel correcto.

4E ÉTAPE

Reportez-vous aux spécifications d’amortisseur énoncées à la fin du catalogue. Trouvez d’abord la série appropriée. Comparez ensuite les longueurs d’extension et de compression et trouvez les bons codes de fixation. Reportez-vous à la colonne située à la extrême gauche du tableau pour identifier le bon numéro de pièce pour un amortisseur Gabriel.

Gabriel®
COMMERCIAL VEHICLE
An ArvinMeritor™ Brand

CATALOGUE GABRIEL® 2007

Amortisseurs pour Camions, Remorques, et Autobus

Gabriel®
COMMERCIAL VEHICLE

an **ArvinMeritor** brand

GasSLX
Amortisseurs de poids lourd/Ajustable

Garantie de 2 ans, 320 000 kilomètres

Série 89000

Notre amortisseur à gaz de première qualité pour poids lourds, ajustable sur trois positions.

- Cellule de gaz à joint double unique en son genre pour une rétention supérieure du gaz
- Position ajustable pour un confort de roulement adapté
- Embouts à alésage de 5/8 po, soudés à l'arc sur 360° pour une durabilité accrue
- Liquide H.T. spécial qui réduit la friction et l'usure dans des conditions extrêmes de service
- Plusieurs autres composants améliorés se combinant pour offrir le summum en performance et en durabilité

LIQUIDE H.T.

Série 83000

Notre plus petit produit de service intense convenant le mieux pour la suspension avant des camionnettes comme des poids lourds.

- Alésage de 1 3/8 po
- Fermeture par rotation[1]
- Valve à 9 étages

FLEETLINE
Amortisseurs de poids lourd

Garantie d'un an, kilométrage illimité

Séries 85000/85300

La durabilité accrue fait de ces deux séries la norme en service intense pour les suspensions modernes à faible frottement.

- Alésage de 1 5/8 po pour une durabilité accrue
- Embouts soudés à l'arc sur 360° pour les protéger contre les cassures
- Butée hydraulique de rebond[2] protégeant les amortisseurs et les pièces de fixation du véhicule contre les chocs
- Joint de piston à plusieurs lèvres offrant une protection supérieure
- Fermeture par soudure améliorant la résistance à la rupture

Série 85700

Conçue spécialement pour les camions et le service intense sur les autobus. Les caractéristiques spéciales de cette série assurent un service uniforme de durée prolongée.

- Alésage de 1 5/8 po sur tube bombé offrant une contenance accrue en liquide pour un service plus frais
- Matériau breveté de joint de bielle accroissant de façon marquée la durée utile du joint
- Liquide H.T. spécial qui réduit la friction et l'usure en conditions extrêmes de service
- Toutes les caractéristiques spéciales des séries 85000 et 85300

LIQUIDE H.T.

[1] Fermeture soudée le cas échéant.
[2] Le cas échéant.

Des amortisseurs fabriqués selon les mêmes normes de qualité, de conception, de durabilité et de résistance qui ont donné à nos amortisseurs de première monte, leur réputation mondiale.

Amortisseurs pour cabine

Conçus spécialement pour éliminer les vibrations dans la cabine.

- Alésages de 1, 1 3/16, 1 3/8 ou 1 5/8 po pour une suspension adaptée aux diverses grandeurs de cabines
- Modèle unique à cellule de gaz[3] réduisant la perte d'amortissement due à l'aération du liquide
- Valve à 9 étages exclusive offrant un roulement uniforme à toutes les vitesses
- Bielle de piston chromée de première qualité conçue pour résister à la corrosion et réduire l'usure du joint de la bielle
- Joint de piston à plusieurs lèvres offrant une protection d'appoint et une durabilité accrue

FLEETLINE

Amortisseurs pour cabine

Garantie d'un an, kilométrage illimité

Série 66000

Pour un rendement uniforme et fiable. Axé sur les applications pour camionnettes et fourgonnettes.

- Alésage de 1 3/8 po
- Chargé de gaz
- Joint radial à lèvre et de bielle de piston
- Réservé aux applications non commerciales

GAS Light Truck

Garantie d'un an, 40 000 kilomètres

Stabilisateurs de direction

- Embouts renforcés soudés à l'arc protégeant contre les cassures et améliorant la durabilité
- Modèle unique à cellule de gaz séparant l'air de l'huile pour assurer un service fiable selon l'horizontale
- Embouts spéciaux (style première monte) améliorant le montage et la durabilité

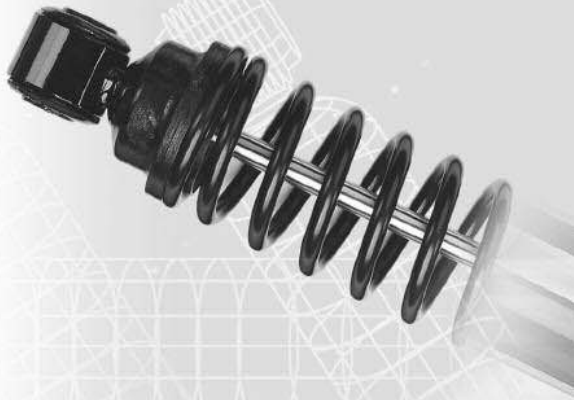

[3]Là où le design le permet.

TABLE DES MATIÈRES

Les amortisseurs Gabriel pour poids lourds

Renseignements sur les produits 270
Quand doit-on changer les amortisseurs 277
Directives pour se débarrasser des amortisseurs 280
Politique afférente à la garantie 281
Changements au catalogue 13

Liste des applications

Amortisseurs pour cabine 14
Amortisseurs pour applications spéciales 19
(stabilisateurs de direction, amortisseurs de capot)
Camionnettes 20
Poids moyens, poids lourds, remorques et autobus 44

Liste numérique

Amortisseurs pour applications spéciales 176
Amortisseurs à gaz pour camionnettes 176
Fleetline 178
GasSLX 185

Liste d'échange

Échanges concurrents 188
Échanges avec l'équipement d'origine 201
Échanges Fleetline/GasSLX 217
Échanges n° fabricant/n° catalogue 218

Comment trouver l'amortisseur qui convient à votre camion

Établir la série/mesurer les dimensions extérieures 220
Identifier le style de fixation/mesurer les longueurs allongé et rétracté 221
Établir le code de fixation/Designs des embouts Gabriel 222
Trouver le bon numéro de pièce/Spécifications par embout 226
Spécifications par numéro de pièce 236

Groupes d'accessories de montage

Liste des pièces composantes 247
Guide de l'acheteur 253

Sección en Español

Indice 255

Gabriel®
COMMERCIAL VEHICLE
an ArvinMeritor brand

FLEETLINE

Amortisseurs pour cabine

Conçus spécialement pour contrôler les vibrations de la cabine !

«Voir la liste des applications aux pages 14 à 18.»

- Design unique de CELLULE À GAZ* - réduit la perte d'efficacité
- Système de soupapes exclusif à 9 étages qui procure un contrôle constant à toutes les vitesses
- Tige de piston plaquée de chrome de qualité supérieure, conçue pour résister à la corrosion et réduire l'usure du joint de tige
- Joint à lèvres multiples en nitrile pour tige de piston procurant plus de durabilité
- Le liquide pour amortisseur « toutes saisons » assure le bon fonctionnement de l'amortisseur lors de températures extrêmes

* Là où le design le permet

Garantie d'un an, kilométrage illimité

Gabriel®
COMMERCIAL VEHICLE
an ***ArvinMeritor*** brand

GasSLX Ajustables

Amortisseur s au gaz pour poids lourds

Le « SLXtion » : Le summum en roulement

Les amortisseurs ajustables GasSLX à trois positions vous permettent de choisir l'une des 3 options : FERME, NORMALE et EXTRA FERME.

L'option FERME correspond le mieux aux performances des équipements d'origine.

Les options NORMALE et EXTRAFERME vous permettent de créer une conduite plus douce ou plus ferme que celle des amortisseurs d'origine, en service normal. Pour assurer un confort plus doux que celui des amortisseurs d'origine, vous pouvez choisir de passer sur l'option NORMALE.
Pour une conduite plus ferme et plus « contrôlée » que celle des amortisseurs d'origine, vous pouvez choisir l'option EXTRA FERME.

À vous de choisir!

Comparaison de la force de recul pour un GasSLX VS typique en équipement d'origine

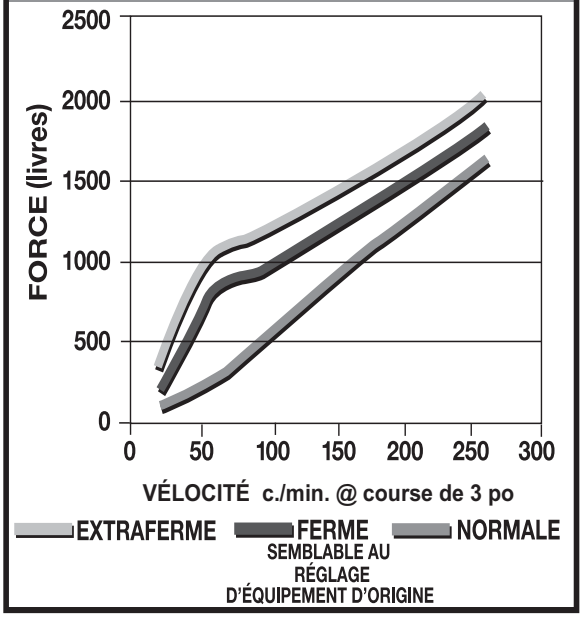

HUILE H.T.

Garantie de 2 ans, 320 000 kilomètres

LE CONTRÔLE AVANT TOUT !

Gabriel®
COMMERCIAL VEHICLE

an ArvinMeritor brand

GasSLX Ajustables

Amortisseur s au gaz pour poids lourds

FIABILITÉ
CONTRÔLE
CONFORT
CHOIX DE SUSPENSION

Chez Gabriel, une amélioration de qualité supérieure est plus qu'une promesse, c'est un engagement à fournir un bon produit. Le GasSLX de Gabriel a été conçu en utilisant des composantes de première qualité qui font une différence visible.

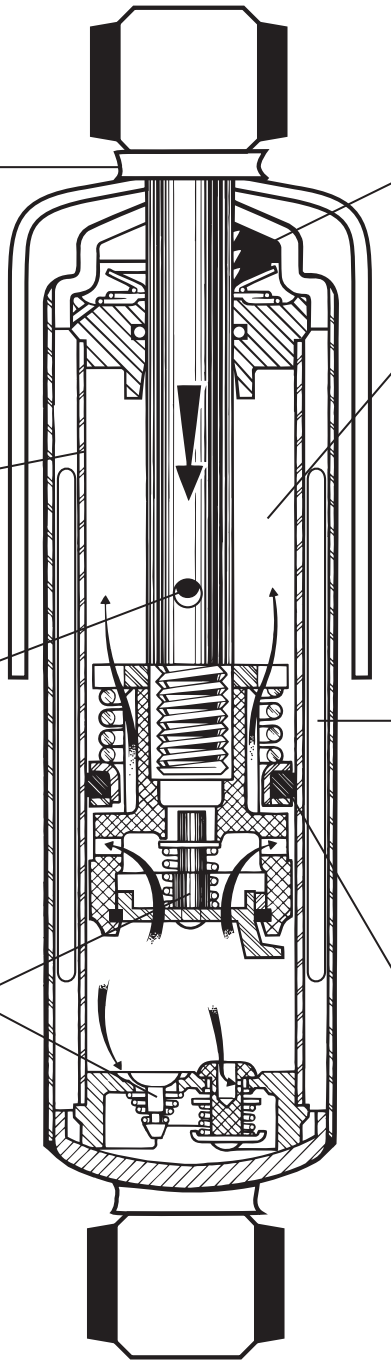

EMBOUTS SOUDÉS À L'ARC SUR 360°

Protection contre le bris des embouts.
Les suspensions modernes requièrent des amortisseurs qui résistent au fléchissement multidirectionnel. Grâce au renforcement de la soudure sur 360°, nous pouvons garantir une supériorité structurelle.

Résistance accrue à la traction
Fournit la résistance additionnelle nécessaire pour limiter la course sur les suspensions pneumatiques.

ALÉSAGE SUPÉRIEUR

Alésage de 1 5/8 po, conception éprouvée en équipement d'origine.
Surface utile optimale qui, combinée au liquide H.T. de Gabriel, garantit un rendement et une durabilité sans égal.

BUTÉE HYDRAULIQUE

Évite les dommages par choc aux composantes de l'amortisseur et du montage du véhicule.
En cas d'extension totale, le limitateur dans la bielle est fermé pour bloquer le liquide entre le piston et la culasse supérieure, créant ainsi un coussin hydraulique.

VALVE A NEUF ETAGES

Améliore la maniabilité tout en maintenant le confort.
Permet d'ajuster les paramètres d'amortissement, de façon indépendante, à toutes les vitesses.

JOINT DE VITON À PLUSIEURS LÈVRES

Une conception à toute épreuve pour une rétention du liquide et un rendement haute température supérieurs.
Les lèvres multiples servent de protection additionnelle contre l'écoulement du fluide.

LIQUIDE HAUTE TEMPÉRATURE (H.T.)

LIQUIDE H.T.

Réduit le frottement et l'usure dans des conditions de service extrêmes.
Les pressions et températures extrêmes peuvent causer la décomposition des liquides ordinaires. La formule unique du liquide H.T. de Gabriel conserve ses propriétés lubrifiantes à des pressions et températures deux à trois fois plus élevées que les liquides ordinaires.

CELLULE DE GAZ

Double joint d'étanchéité pour s'assurer que l'hexafluorure de soufre gazeux demeure à l'intérieur de l'amortisseur.
La cellule de gaz sépare le gaz du liquide pour qu'ils ne se mélangent pas et qu'il n'y ait pas de formation de bulles dans le liquide, ce qui pourrait réduire son efficacité.

SEGMENT METALLIQUE PRESSURISE

Actionné de façon hydraulique pour maintenir les paramètres d'amortissement voulus.
Au fur et à mesure qu'elle s'use, la pression hydraulique pousse le segment dans le tube afin de maintenir les propriétés du joint d'étanchéité et les paramètres d'amortissement.

Garantie de deux ans 320 000 kilomètres

Gabriel®
COMMERCIAL VEHICLE
an *ArvinMeritor* brand

FLEETLINE

Amortisseurs pour poids lourds

Des composantes de première qualité assurent un rendement optimal pour toute la durée de vie de l'amortisseur; les pièces de suspension coûteuses sont donc aussi mieux protégées contre l'usure et la détérioration.

Des amortisseurs solides qui vous laissent maître de votre véhicule.

Embouts soudés à l'arc sur 360° et usinés à froid*
- Résistance accrue à la traction
- Réduction importante des bris des embouts.

Couvercles à lèvres multiples
- Protection additionnelle du joint d'étanchéité = Rétention améliorée du liquide
- Rétention améliorée du liquide = Durée de vie prolongée de l'amortisseur

Conception bombée**
- Plus grande contenance en liquide
- Température de service plus basse
- Moins d'usure interne grâce à la dissipation de la chaleur

Alésage supérieur de 1 5/8 po*
- Résistance accrue à la traction
- Conçu pour plus de contrôle
- Conception éprouvée pour les suspensions à coefficient de frottement réduit

Joint de piston flottant
- Réduit les variabilités force/vitesse
- Augmente la capacité de contrôle à faible vitesse
- Autocompensation de l'usure
- Moindre usure entre le cylindre et le joint du piston signifie moins de jeu et donc moins de perte d'efficacité
- Moins de perte d'efficacité signifie un rendement plus uniforme dans l'ensemble

Butée d'extension hydraulique
- Évite que les amortisseurs ne dépassent leur point maximal et que les suspensions ne s'allongent trop
- Conçu pour des suspensions à coefficient de frottement réduit, comme les suspensions à ressorts pneumatiques, etc.

Valve à 9 étages à ressort hélicoïdal
- Pour plus de confort et de contrôle
- Durabilité améliorée
- Autonettoyant

Garantie d'un an, kilométrage illimité

* À l'exception de la série 83000.
** Y compris les séries 85300 et 85700.

REMARQUE : Les caractéristiques peuvent varier selon le numéro de pièce.

Gabriel®
COMMERCIAL VEHICLE
an ArvinMeritor brand

L'évolution vers des amortisseurs plus performants

L'évolution vers des suspensions plus performantes est en cours depuis fort longtemps! De plus en plus de suspensions de poids lourds et de remorques intègrent maintenant des organes à faible frottement tels que le ressort pneumatique ou la lame dégressive. Les besoins en performance et le déplacement accrus des suspensions à coefficient de frottement réduit, ont rendu indispensables les amortisseurs à performance de pointe.

Auparavant...

Les grosses suspensions à lames multiples se caractérisaient par des déplacements très limités et un coefficient élevé de frottement. Elles amortissaient rapidement les oscillations, ce qui limitait le travail que devaient exécuter les amortisseurs.

Aujourd'hui et demain...

La nouvelle génération de suspensions à faible coefficient de frottement, comme le ressort pneumatique et la lame dégressive offre un coefficient de frottement réduit et un déplacement vertical accru. Ces caractéristiques améliorent le contrôle en service et le rendement des camions et des remorques, en plus de réduire la tension physique du conducteur en isolant le véhicule et la charge des vibrations de la route.

Plus que jamais, il faut choisir les amortisseurs qui conviennent...

Le passage aux suspensions à faible coefficient de frottement rend plus impératif le contrôle des oscillations de suspension, au point que l'amortisseur est devenu un **composant essentiel** des poids lourds et des remorques modernes.

Nous possédons les amortisseurs qui répondent à vos besoins! Le contrôle avant tout!

Suspension à plusieurs lames

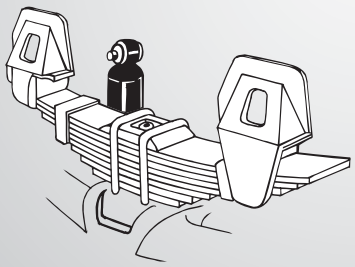

Le coefficient de frottement élevé limite le déplacement de la suspension à 2 ou 3 po..

Suspension à ressort pneumatique

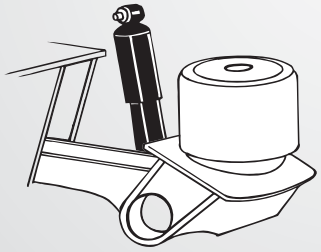

Suspension à lame dégressive

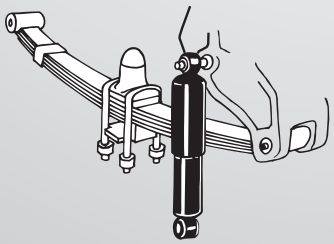

La fonction d'amortissement a été déléguée aux amortisseurs. Le déplacement de ces suspensions peut dépasser les 9 po.

Gabriel®
COMMERCIAL VEHICLE
an *ArvinMeritor* brand

QUAND DOIT-ON CHANGER LES AMORTISSEURS

Les conditions suivantes indiquent qu'il est temps de changer les amortisseurs. Rappelez-vous que des amortisseurs usés peuvent causer des vibrations qui risquent d'endommager le système électrique, le cadre châssis ou le moteur. L'inspection régulière des amortisseurs peut prolonger la vie de votre camion.

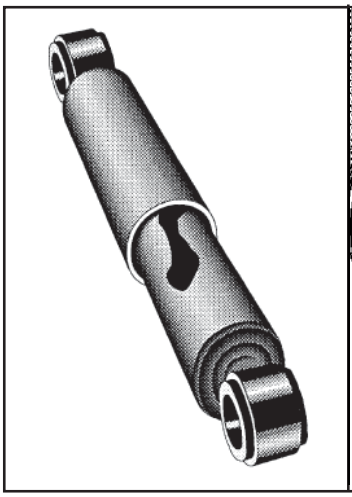

L
Fuites
(Assurez-vous d'enlever les saletés de la route sur les amortisseurs)

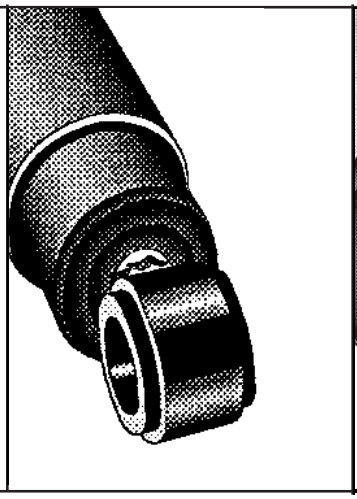

UMB
LMB
Bris au niveau de l'embout supérieur ou inférieur

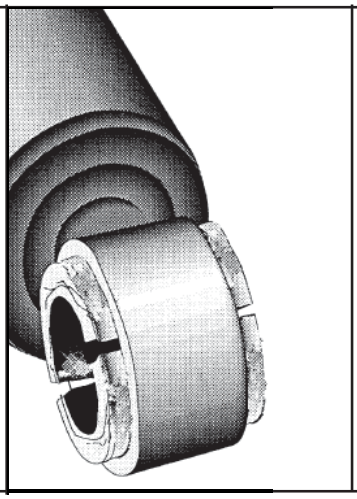

UBB
LBB
Bris au niveau de la bague supérieure ou inférieure

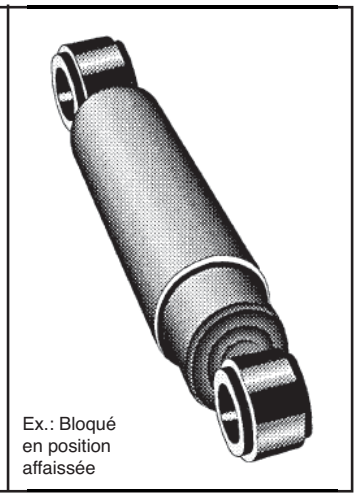

BI
S
Bris interne
Grippé

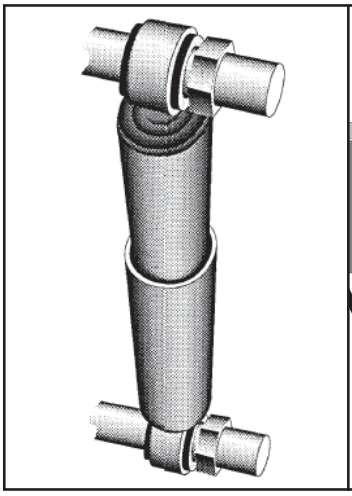

II
Mauvaise installation
(Ex.: amortisseur installé à l'envers)

RC
Plainte au niveau de la conduite

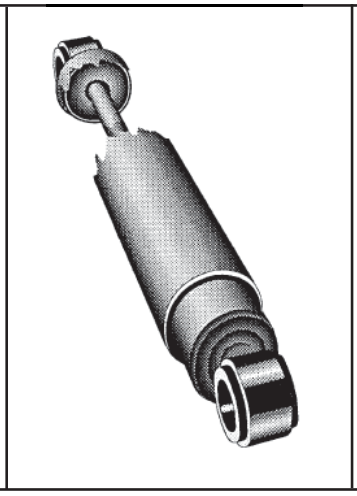

DT
Bris du pare-poussière

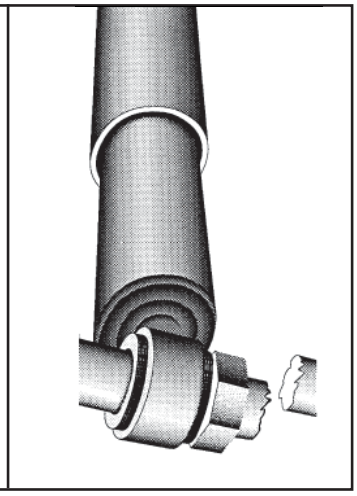

TMF
Défaut au niveau de la fixation au camion

Gabriel®
COMMERCIAL VEHICLE
an *ArvinMeritor* brand

Guide pour l'inspection

DES AMORTISSEURS DE CAMION

À long terme, l'entretien régulier des amortisseurs produit non pas des dépenses, mais des économies.

Comme pour la plupart des autres parties de châssis, l'entretien des amortisseurs vous aidera à prévenir les pannes et à réduire les coûts généraux d'entretien.

Le rôle des amortisseurs a beaucoup changé. Il n'y a pas si longtemps, la plupart des suspensions étaient munies de ressorts à lames lourdes de course limitée et à grande friction. Ces suspensions s'amortissaient vite d'elle-même et le travail de l'amortisseur était donc limité.

Les suspensions à faible frottement telles que celles à ressort pneumatique ou à lames dégressives ont modifié de façon radicale le rôle des amortisseurs. Les amortisseurs occupent maintenant un rôle important dans l'amortissement des oscillations de la suspension.

Des amortisseurs en bon état réduisent l'usure des composants de suspension plus coûteux comme les coussins pneumatiques, et aident à réduire l'usure des pneus et les dommages à la cabine et aux châssis causés les vibrations. Ils aident aussi à réduire la fatigue du conducteur. Des amortisseurs usés ne peuvent tout simplement pas fournir le contrôle exigé par les suspensions sophistiquées modernes.

Quand faut-il remplacer les amortisseurs ?

Les indices indiquant qu'il **pourrait** être temps de remplacer les amortisseurs sont nombreux.

Constatez-vous :

Une usure inégale des pneus ? Vérifiez d'abord la géométrie
Une détérioration de la tenue de route ?
Une vibration excessive ?
Un affaissement des ressorts à lames dégressives ? Ceci n'est pas dû à des amortisseurs fatigués
Une usure prématurée des parties de la cabine, des systèmes électriques et de refroidissement du moteur ?
Des ressorts pneumatiques déformés ou cassés ? Les amortisseurs ne seront en cause que s'ils sont cassés ou manquants.

VOLTIGE OU FUITE?

Souvent, un voltige (brouillard d'huile) est confondu pour une fuite. Le voltige résulte de l'évaporation de très petites quantités d'huile à haute température, par le joint supérieur de l'amortisseur. Quand le « brouillard » atteint l'air frais extérieur, il se condense et forme une pellicule sur le tube de l'amortisseur. Les débris routiers et la saleté viennent ensuite s'y attacher pour souvent enduire tout le tube. Le voltige est tout à fait normal et une fonction nécessaire pour l'amortisseur. Le liquide qui s'évapore au niveau du joint aide à lubrifier le joint et à en prolonger la durée utile.

Certains techniciens ont de la difficulté à faire la différence entre un voltige et une fuite qui demande alors un remplacement. Une fuite s'identifie par un écoulement bien évident provenant du joint supérieur. Ces coulées peuvent se voir plus facilement quand l'amortisseur est complètement allongé. L'amortisseur devrait être inspecté aussi haut que possible sur le tube (sous le pare-poussière).

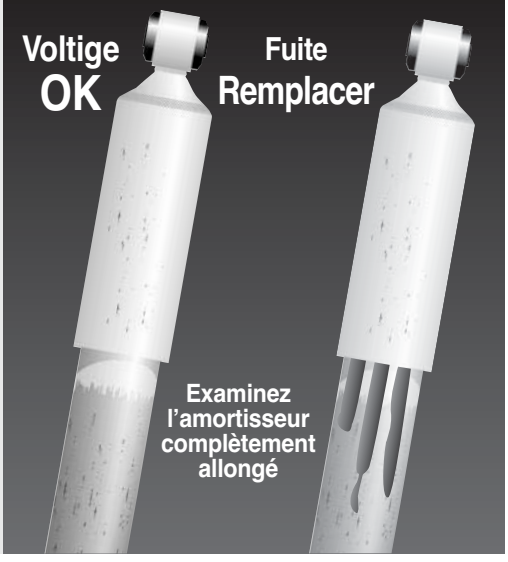

Faites le TEST de la CHALEUR

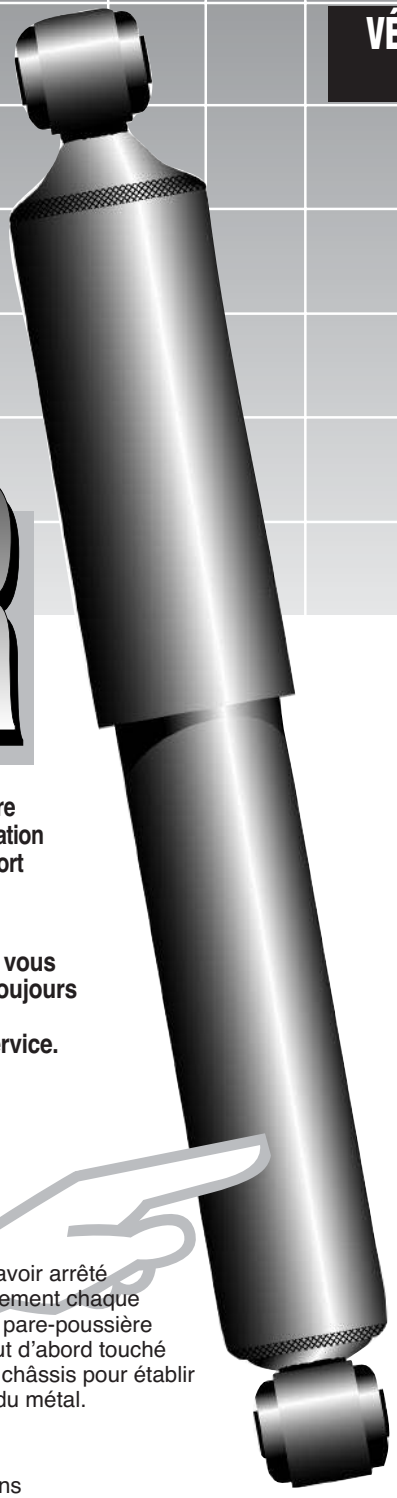

La température de service des amortisseurs varie de la température ambiante jusqu'à 150°C/350°F. L'amortisseur sert à amortir l'oscillation des ressorts du camion. Il le fait en transformant l'énergie du ressort en énergie thermique et en la dissipant. Aussi, en service normal, un amortisseur devrait être chaud à très chaud au toucher.

Si vous constatez une détérioration de la tenue de route et si vous pensez qu'un amortisseur en est la cause - ce qui n'est pas toujours évident « de visu » - faites le « TEST DE LA CHALEUR DE L'AMORTISSEUR » quelques minutes après la mise en service.

1 Conduisez le véhicule à une vitesse modérée pendant au moins 15 minutes.

2 Quelques minutes après avoir arrêté le véhicule, touchez légèrement chaque amortisseur au niveau du pare-poussière ou du tube après avoir tout d'abord touché une partie avoisinante du châssis pour établir la température ambiante du métal.

3 Les amortisseurs doivent être plus chauds que le châssis. Un amortisseur notamment moins chaud que son opposé de l'autre côté de l'essieu pourrait indiquer un problème. Une température différente d'un essieu à l'autre n'est pas un indice de panne, mais une température plus fraîche sur un essieu quelconque demande le retrait et l'inspection de l'amortisseur plus frais.

4 Pour vérifier l'état interne d'un amortisseur, démontez-le et secouez-le. Écoutez bien pour détecter tout son de pièce métallique lâche. Un cliquetis métallique pourrait bien être le signe d'une pièce brisée dans l'amortisseur.

VÉRIFICATION VISUELLE DE L'AMORTISSEUR

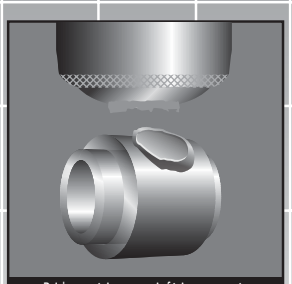

Bride supérieure ou inférieure cassée

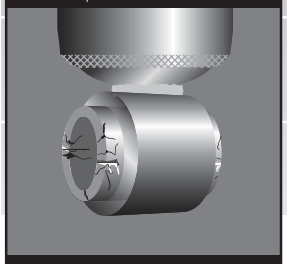

Manchon supérieur ou inférieur cassé
Il est facile à remplacer et il est considéré une pièce de rechange lors de l'entretien régulier d'un amortisseur.

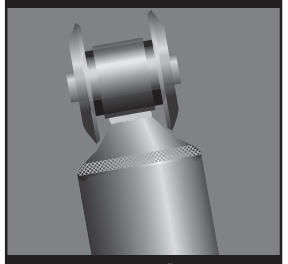

Mauvaise installation
Exemple : Rondelles posées à l'envers.

Pare-poussière endommagé

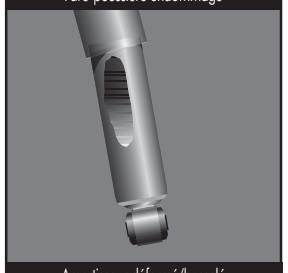

Amortisseur déformé/bosselé

ArvinMeritor
Commerical Vehicle Aftermarket

Meritor Heavy Vehicle Systems, LLC
7975 Dixie Highway
Florence, KY 41042 USA
800-387-3889
www.arvinmeritor.com

Certification ISO 9001 et QS-9000

Comment se débarrasser des amortisseurs de poids lourd Gabriel

Remarque générale

Vous devez prendre les mesures de protection appropriées, comme porter des lunettes de sécurité et des gants quand vous enlevez l'huile et le gaz des amortisseurs mis au rebut et de ceux qui sont défectueux.

Procédure :

1. Maintenez l'amortisseur en position horizontale.
2. Tirez complètement la tige du piston avant de percer la pièce.
3. Avec une mèche de 1/8 de pouce (3 mm), percez un trou vers le bas à environ 1 pouce (25 mm) du bout de l'amortisseur sur 1 pouce (25 mm) de profondeur environ (voir figure A).
4. Percez un deuxième trou d'environ 1/8 de pouce (3 mm) à 2 pouces (50 mm) du haut de l'amortisseur, sur 1 pouce (25 mm) de profondeur, pour que l'huile puisse s'écouler (voir figure B).
5. Actionnez la bielle pour purger complètement l'huile du cylindre (voir figure C).

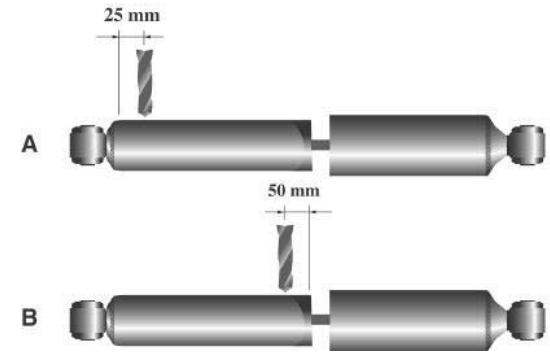

Attention : <u>Pour les amortisseurs à gaz</u>, il est important de recouvrir l'endroit où vous percez le trou avec une serviette ou un écran quelconque pour empêcher le gaz ou l'huile de gicler quand la mèche pénétrera le tube.

Consignes environnementales

6. Récupérez toute huile usée; **faites attention de ne pas mélanger cette huile à tout autre déchet ou rebut**. Entreposez dans des contenants approuvés et étiquetés «vieille huile».
7. Débarrassez-vous de ce qui reste de l'amortisseur et des pièces internes conformément aux règlements fédéraux et provinciaux en vigueur concernant les huiles usées et les autres déchets.
8. Entreposez, transportez l'huile usée ou débarrassez-vous en conformément aux règlements environnementaux et aux programmes fédéraux ou provinciaux pour la vieille huile.

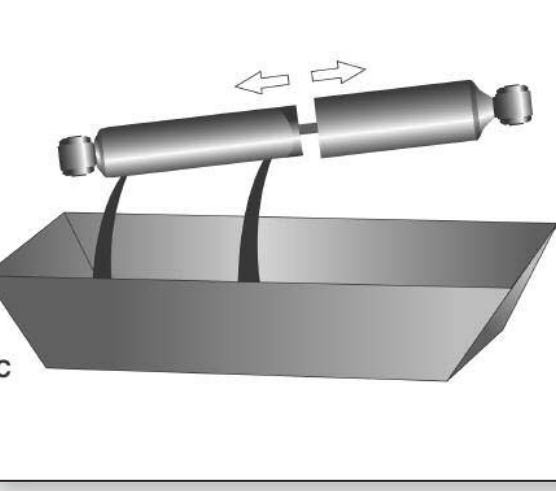

L'huile d'amortisseur peut être placée dans le contenant pour le recyclage de l'huile à moteur. Les agences environnementales ou votre fournisseur d'huile vous indiquera où mettre au rebut l'huile ainsi que d'autres composantes.

A9906F

Politique de garantie sur les amortisseurs Gabriel

Programme pour poids lourds

Garantie commerciale

ArvinMeritor, fabricant des amortisseurs Gabriel, garantit

GasSLX ses amortisseurs GasSLX (série 89000) contre tout vice de fabrication pendant deux ans, à compter de la date d'achat, ou pour 322 000 km, selon la première échéance.

FLEETLINE ses amortisseurs FLEETLINE (séries 83000, 85000, 85300, 85700, 85900 et 87000) contre tout vice de fabrication pendant une période d'un an à compter de la date d'achat, kilométrage illimité.

CETTE GARANTE COMMERCIALE EST LIMITÉE AU REMPLACEMENT DU PRODUIT DÉFECTUEUX SEULEMENT. Les frais d'expédition, d'enlèvement et d'installation sont en sus. Cette garantie s'applique à l'acheteur d'origine, pour usage en service normal.

Les dispositions de cette garantie ne s'appliquent pas à un produit a) installé sur un véhicule enregistré ou utilisé pour des courses automobiles ou des compétitions, b) utilisé à toute fin contraire à l'usage prescrit, c) modifié, soumis à un usage abusif ou en cas de faute ou d'accident, d) mal installé.

Garantie non commerciale

ArvinMeritor, fabricant des amortisseurs Gabriel, garantit :

GAS Light Truck ses amortisseurs pour camionnettes (série G60000) contre tout vice de fabrication pendant un an, à compter de la date d'achat, ou pour 40 250 km, selon la première échéance. Cette garantie s'applique à l'acheteur d'origine et vise les camionnettes et fourgonnettes, pour usage en service normal.

CETTE GARANTIE EST LIMITÉE AU REMPLACEMENT DU PRODUIT DÉFECTUEUX SEULEMENT. Les frais d'expédition, d'enlèvement et d'installation sont en sus.

Les dispositions de cette garantie ne s'appliquent pas à un produit a) installé sur un véhicule enregistré ou utilisé pour un usage commercial, des courses automobiles ou des compétitions, b) utilisé à toute fin contraire à l'usage prescrit, c) modifié, soumis à un usage abusif ou en cas de faute ou d'accident, d) mal installé.

Gabriel®
COMMERCIAL VEHICLE
an ArvinMeritor brand

FLEETLINE → GasSLX

Interchange
Intercambio
Échange

Fleetline	Gabriel GasSLX Upgrade
83122	89406
83123	89405
83124	89407
83126	89430
83203	89436
83207	89407
83209	89414
83308	89435
83309	89446
83312	89409
83456	89447
85000	89436
85001	89410
85003	89411
85005	89430
85006	89401
85007	89412
85012	89413
85013	89414
85023	89415
85024	89416
85026	89417
85027	89418
85030	89440
85033	89427
85036	89405
85046	89434
85047	89435
85053	89442
85054	89438
85055	89439
85058	89431
85061	89450
85062	89408
85066	89448
85067	89451
85069	89455
85300	89419
85302	89420
85303	89422
85308	89422
85310	89423
85311	89424
85314	89425
85316	89426
85319	89428
85320	89429
85323	89436
85724	89443
85918	89449
85932	89453
85933	89454
85936	89456

GasSLX ✕ FLEETLINE

IMPORTANT NOTE: Interchange must only be used for FLEETLINE to GASSLX upgrade. Interchange is **NOT REVERSABLE.**

NOTA IMPORTANTE: El intercambio se debe utilizar solamente de FLEETLINE a GASSLX mejorado. El intercambio **NO ES REVERSIBLE.**

REMARQUE IMPORTANTE: L'échange ne peut se faire que pour le surclassement du FLEETLINE au GASSLX. L'échange **N'EST PAS RÉVERSIBLE.**

Gabriel®
COMMERCIAL VEHICLE
an ArvinMeritor brand

HOW TO DETERMINE THE CORRECT SHOCK FOR YOUR TRUCK

COMO ESCOGER EL MEJOR AMORTIGUADOR PARA SU CAMIÓN

COMMENT CHOISIR LE BON AMORTISSEUR POUR VOTRE CAMION.

STEP 1: **Measure the diameter of the dust tube and cylinder to determine the series.**

1ER PASO **Mida el diámetro del tubo de polvo y del cilindro para determinar la serie.**

1RE ÉTAPE **Mesurez le diamètre du tube de poussière et du cylindre pour déterminer la série.**

EXTERNAL DIMENSIONS
DIMENSIONES EXTERNAS DIMENSIONS EXTÉRIEURES

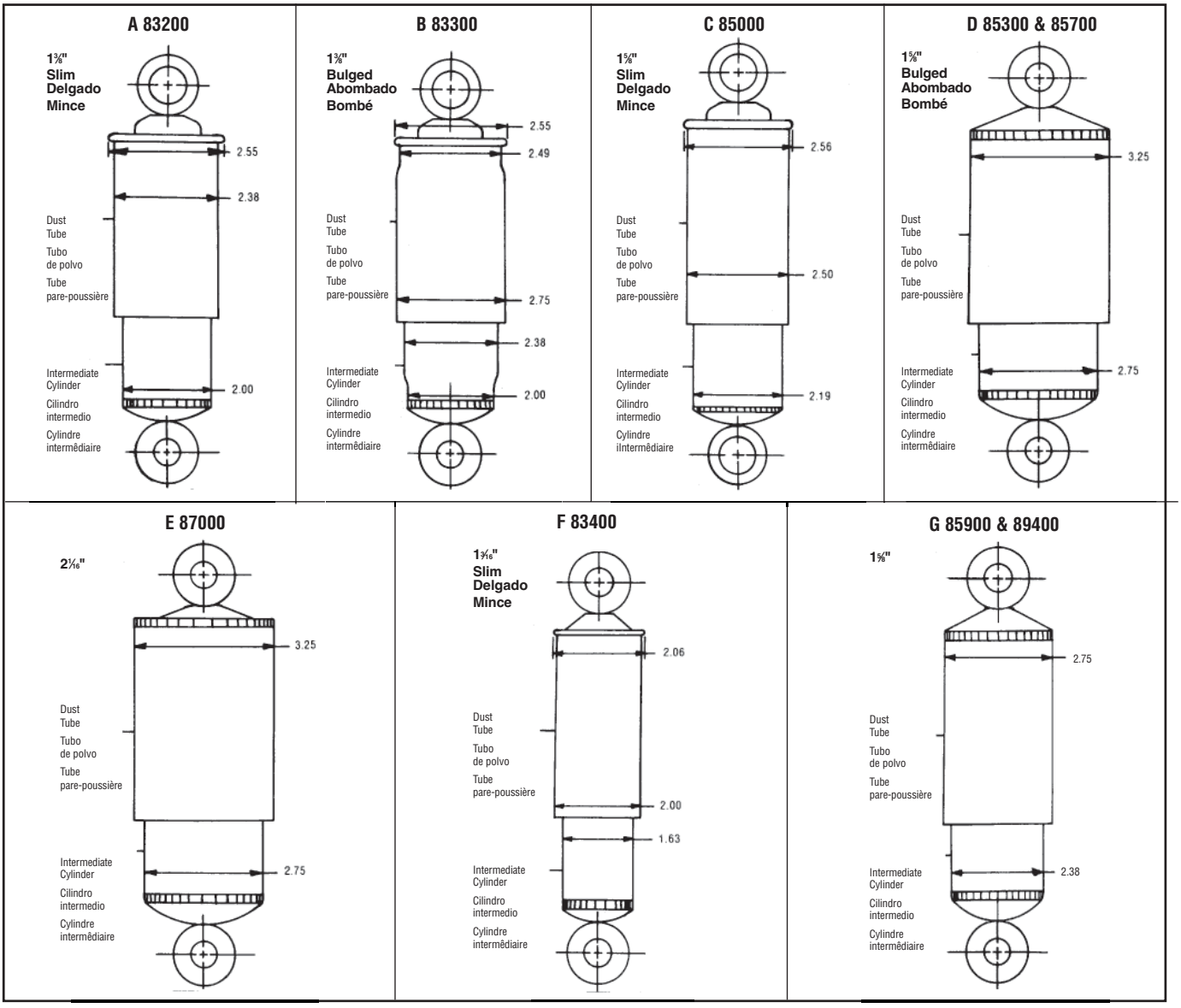

STEP 2: Identify the mounting style. Measure fully extended and fully collapsed lengths at the locations indicated for mounting style.

2° PASO Identifique el método de fijación. Mida la extensión maxima y la compresión maxima en los lugares indicados para la fijación.

2E ÉTAPE Identifiez la méthode de fixation. Mesurez la longueur en pleine extension et en pleine compression, aux endroits indiqués pour la méthode de fixation.

HOW TO MEASURE EXTENDED & COLLAPSED LENGTHS OF SHOCK ABSORBERS
COMO MEDIR LAS LONGITUDES EXTENDIDA Y COMPRIMIDA DE LOS AMORTIGUADORES
COMMENT MESURER LES LONGUEURS ALLONGÉ ET COMPRIMÉ DES AMORTISSEURS

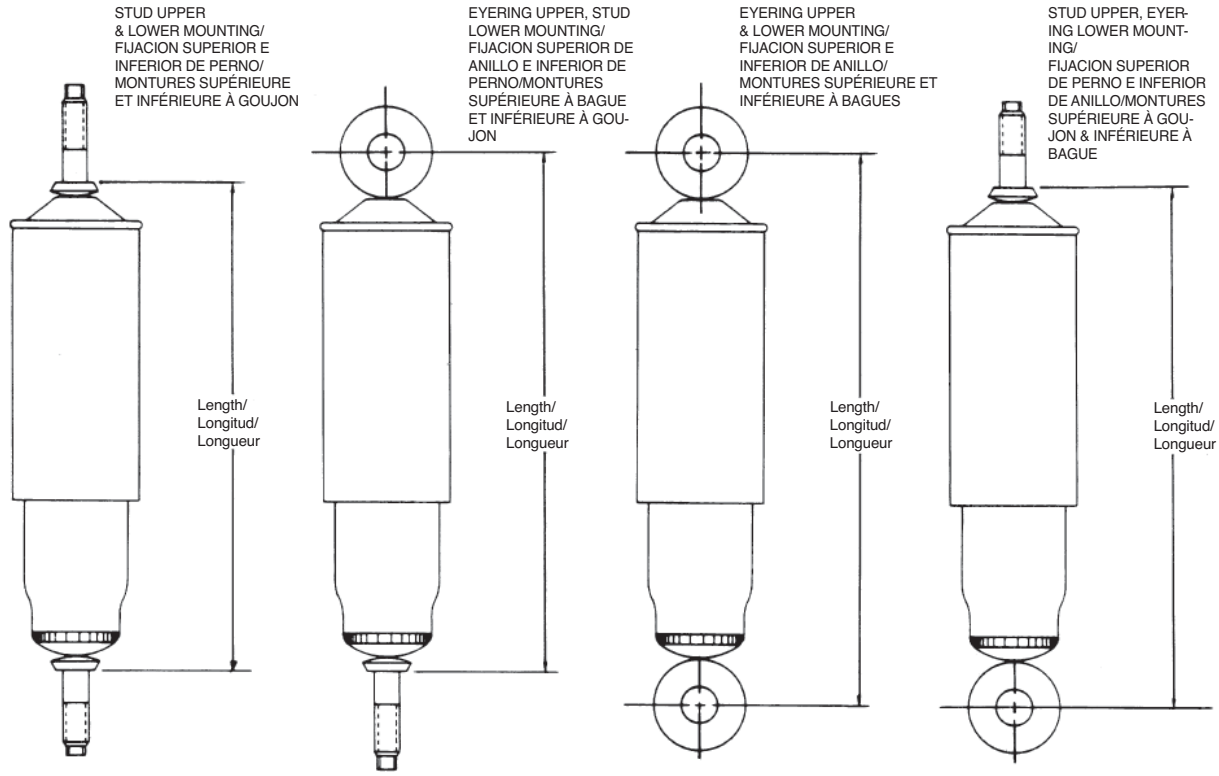

INSTRUCTIONS:

1. Using the proper measuring points as shown above find the nearest replacement shock absorber from the listing by increments of extended length.
2. Identify the proper mounting from the mounting codes and match these requirements by carefully measuring the mounting dimensions (top and bottom) of the shock absorber to be replaced.
3. Carefully take note of the following requirements:
   a. **Dust tubes** - This requirement should be noted in comparison with the shock absorber to be replaced. Shock absorber environment in its application makes this requirement necessary for piston rod protection and extended shock absorber life.
   b. **Recoil Cutoff and Compression Bumper** - Carefully note these specifications - deviation of length requirements should not exceed ± ¼". These shock absorber designs are footnoted for easy identification.

Note: Shock Absorbers used for installations other than those recommended in our catalog are **not subject to warranty.**

INSTRUCCIONES :

1. Usando los puntos de medida adecuados como mencionado, encuentre el amortiguador más cercano en la lista por incrementos de la longitud extendida.
2. Identifique la fijación adecuada por medio de los códigos de fijación y compare estas especificaciones, midiendo cuidadosamente las dimensiones de la fijación (superior e inferior) del amortiguador por reemplazar.
3. Note cuidadosamente las exigencias siguientes :
   a. **Guarda polvo** : esta exigencia debe notarse en comparación con el amortiguador por reemplazar. Esta exigencia es necesaria en cuanto a los amortiguadores para proteger al vástago del pistón y extender la duración del amortiguador.
   b. **Tope de retorno y tope de compresión**. Note cuidadosamente las especificaciones siguientes : las exigencias de longitud no deben de ser excedidas ± ¼". Estos diseños de amortiguadores están marcados para facilitar su identificación.

Nota : Los amortiguadores usados para instalaciones otras que las recomendadas en nuestro catálogo **no son garantizados.**

INSTRUCTIONS:

1. En utilisant les points de mesure appropriés comme indiqués ci-dessus, trouvez l'amortisseur de rechange le plus près de cette mesure d'après la longueur allongée.
2. Repérez les montures appropriées sur les codes des montures et faites correspondre ces exigences en mesurant attentivement les dimensions des montures (haut et bas) de l'amortisseur à replacer.
3. Avec soin, prenez note des exigences suivantes:
   a. **Tubes pare-poussière** - Cette exigence devrait être notée en comparaison de l'amortisseur à remplacer. Le milieu de service rend cette exigence nécessaire pour la protection de la tige de piston et une meilleure longévité de l'amortisseur.
   b. **Arrêt de retour et butée de compression** - Notez avec soin ces spécifications. La déviation par rapport aux exigences de longueurs ne doit pas dépasser ± ¼ po. Ces modèles d'amortisseurs portent une note pour une identification facile.

Note: Les amortisseurs utilisés pour des installations autres que celles recommandées dans notre catalogue **ne sont pas couverts par la garantie.**

STEP 3: Measure end mount diameters, widths, and lengths. Refer to the following Endmount tables to determine the appropriate or matching mounting code

3ER PASO Mida las dimensiones del tubo, así como el diámetro, la anchura y la longitud de las fijaciones. Consulte las tablas siguientes de conteras para determinar el código de montaje apropiado o concorde

3E ÉTAPE Mesurez le diamètre, la largeur et la longueur des bagues. Consultez les tableaux d'embouts suivants afin d'établir le code de montage approprié ou concordant

MOUNTING CODE "EB" EYERING AND BUSHING
CODIGO DE FIJACION «EB» - ANILLO Y BUJE CODE DE MONTURE «EB» À BAGUE ET MANCHON

EB1

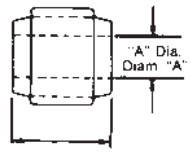

FREE LENGTH "B"
COMP LENGTH "C"
LONGITUD LIBRE "B"
LONGITUD COMPRIMIDA "C"
LONGUEUR NON COMP "B"
LONGUEUR COMP "C"

EB2

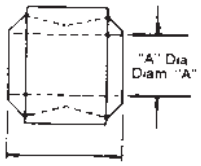

FREE LENGTH "B"
COMP LENGTH "C"
LONGITUD LIBRE "B"
LONGITUD COMPRIMIDA "C"
LONGUEUR NON COMP "B"
LONGUEUR COMP "C"

EB3

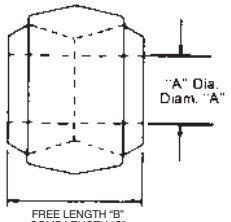

FREE LENGTH "B"
COMP LENGTH "C"
LONGITUD LIBRE "B"
LONGITUD COMPRIMIDA "C"
LONGUEUR NON COMP "B"
LONGUEUR COMP "C"

EB4

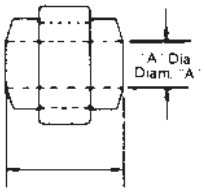

FREE LENGTH "B"
COMP LENGTH "C"
LONGITUD LIBRE "B"
LONGITUD COMPRIMIDA "C"
LONGUEUR NON COMP "B"
LONGUEUR COMP "C"

EB6

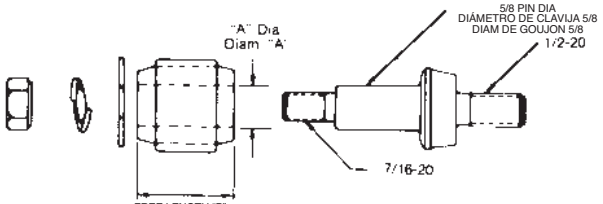

FREE LENGTH "B"
COMP LENGTH "C"
LONGITUD LIBRE "B"
LONGITUD COMPRIMIDA "C"
LONGUEUR NON COMP "B"
LONGUEUR COMP "C"

EB5

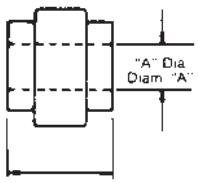

FREE LENGTH "B"
COMP LENGTH "C"
LONGITUD LIBRE "B"
LONGITUD COMPRIMIDA "C"
LONGUEUR NON COMP "B"
LONGUEUR COMP "C"

EB7

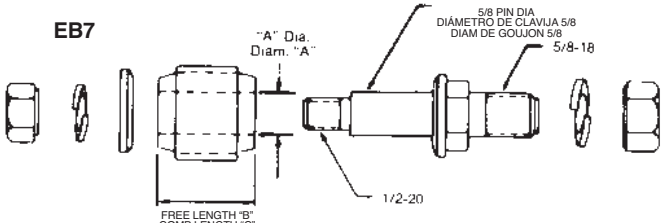

FREE LENGTH "B"
COMP LENGTH "C"
LONGITUD LIBRE "B"
LONGITUD COMPRIMIDA "C"
LONGUEUR NON COMP "B"
LONGUEUR COMP "C"

EB8

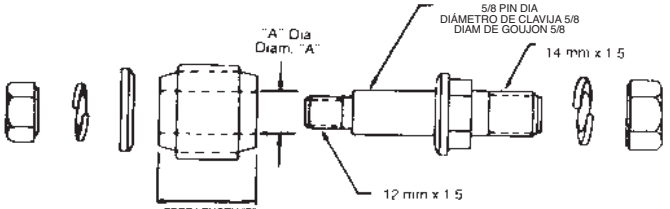

FREE LENGTH "B"
COMP LENGTH "C"
LONGITUD LIBRE "B"
LONGITUD COMPRIMIDA "C"
LONGUEUR NON COMP "B"
LONGUEUR COMP "C"

Mounting Code Código de fijación Code de monture	"A" Dia. Diámetro "A" Diam. "A"	B Free Length Longitud libre Long. non comp.	C Comp. Length Longitud comprimida Long. comp.	Vehicle Mounting Pin Dia. Diámetro de clavija de fijación del vehículo Diam. du goujon de montage du véhicule
EB1	5/8	1.44	1.31/1.25	5/8
EB2	3/4	1.75	1.50	3/4
EB3	1	1.91	1.75	1
EB4	11/16	1.72	1.55	11/16
EB5	5/8	1.51	1.25	5/8
EB6	5/8	1.44	1.31/1.25	Mounting pin furnished with shock absorber for 1/2" dia. vehicle mounting hole. Clavija de fijación provista con amortiguador para agujero de montaje de 1/2" de diámetro en el vehículo. Goujon de montage fourni avec l'amortisseur pour trou de montage de 1/2 po de diam. sur véhicule.
EB7	5/8	1.44	1.31/1.25	Mounting pin furnished with shock absorber for 5/8" dia. vehicle mounting hole. Clavija de fijación provista con amortiguador para agujero de montaje de 5/8" de diámetro en el vehículo. Goujon de montage fourni avec l'amortisseur pour trou de montage de 5/8 po de diam. sur véhicule.
EB8	5/8	1.44	1.31/1.25	Mounting pin furnished with shock absorber for 14 mm dia. vehicle mounting hole. Clavija de fijación provista con amortiguador para agujero de montaje de 14 mm de diámetro en el vehículo. Goujon de montage fourni avec l'amortisseur pour trou de montage de 14 mm de diam. sur véhicule.

MOUNTING CODE "BP" EYERING AND BUSHING WITH BAR PIN
CODIGO DE FIJACION «BP» ANILLO Y BUJE CON CLAVIJA TIPO BARRA
CODE DE MONTURE "BP" BAGUE ET MANCHON AVEC GOUPILLE

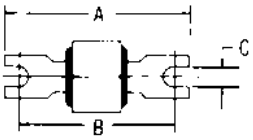

Type 1/Tipo 1

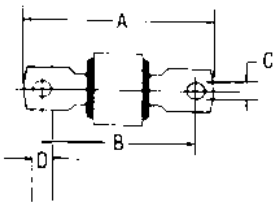

Type 2 /Tipo 2

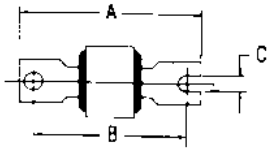

Type 3 /Tipo 3

Code	Type	A	B	C	D	Code	Type	A	B	C	D
BP1	1	2.72	2.20	0.33	---	BP16	2	3.70	2.91	0.35	0.44
BP3	1	2.82	2.38	0.33	---	BP17	1	3.11	2.61	0.33	---
BP4	1	3.19	2.38	0.33	---	BP18	1	3.75	3.14	0.39	---
BP5	1	3.19	2.75	0.33	---	BP19	1	3.19	2.62	0.33	---
BP6	1	4.25	3.62	0.33	---	BP20	1	3.59	3.12	0.33	---
BP7	2	3.13	2.50	0.35	0.42	BP26	3	3.06	2.37	0.26	---
BP8	2	3.50	2.87	0.35	0.42	BP27	2	4.00	2.95	0.52	---
BP11	1	2.96	2.52	0.33	---	BP30	1	3.00	2.25	0.34	---
BP12	1	3.75	3.14	0.33	---	BP31	3	3.50	2.87	0.35	---
BP13	1	3.45	3.00	0.33	---	BP32	2	3.45	2.83	0.42	---
BP14	2	3.43	2.87	0.43	---	BP33	2	3.50	2.87	0.35	0.42

MOUNTING CODE "ES" & "CB" EYERING AND BUSHING WITH STEEL SLEEVE
CODIGO DE FIJACION «ES» Y «CB» ANILLO Y BUJE CON CAMISA DE ACERO
CODE DE MONTURE "ES" & "CB" BAGUE ET MANCHON AVEC COLLET EN ACIER

TYPE 1/TIPO 1 CENTERED IN EYERING
CENTRADO EN EL ANILLO
CENTRÉ DANS LA BAGUE

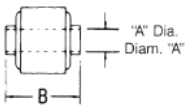

TYPE 2/TIPO 2 OFFSET IN EYERING
DESCENTRADO EN EL ANILLO
DÉCALÉ SUR LA BAGUE

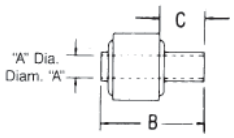

TYPE 3/TIPO 3 CAPTURED BUSHING
BUJE CAPTURADO
MANCHON PRISONNIER

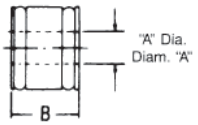

Code	Type	"A" Dia.	B	C
ES160	1	1.00	2.01	---
ES22	1	½	1.25	---
ES23	1	½	1.31	---
ES24	1	½	1.38	---
ES25	1	½	1.48	---
ES26	1	½	1.56	---
ES27	1	½	1.62	---
ES31	2	½	2.25	1.00
ES32	1	½	3.34	---
ES45	1	½	1.53	---
ES82	1	½	1.67	---
ES91	1	½	2.00	---
ES94	1	½	2.10	---
ES126	1	½	2.44	---
ES128	1	½	1.66	---
ES130	1	½	1.56	---
ES149	1	½	2.36	---
ES151	1	½	2.44	---
ES157	2	½	2.05	0.95
ES164	1	½	2.26	---
ES165	1	½	1.75	---
ES171	1	½	1.88	---
ES172	1	½	2.72	---
ES36	1	¾	1.75	---
ES120	1	¾	2.76	---
ES121	1	¾	2.06	---
ES150	1	¾	2.24	---
ES158	1	¾	3.80	---
ES159	2	¾	3.21	1.03
ES178	1	¾	1.96	---
ES35	1	⅝	1.38	---
ES90	1	⅝	2.00	---
ES136	1	⅝	1.75	---
ES161	1	⅝	3.95	---
Code	**Type**	**"A" Dia.**	**B**	**C**
ES162	1	⅝	2.60	---
ES166	1	⅝	2.97	---
ES174	1	⅝	3.25	---
ES8	1	7⁄16	1.25	---
ES9	1	7⁄16	1.31	---
ES10	1	7⁄16	1.38	---
ES11	1	7⁄16	1.50	---
ES12	1	7⁄16	1.62	---
ES14	1	7⁄16	1.88	---
ES16	1	7⁄16	3.15	---
ES38	1	7⁄16	2.16	---
ES40	1	7⁄16	3.38	---
ES145	1	7⁄16	2.25	---
ES163	1	7⁄16	2.50	---
ES173	1	⅞	2.28	---
ES34	1	9⁄16	1.66	---
ES87	1	9⁄16	1.62	---
ES143	1	9⁄16	1.60	---
CB6	3	10 mm	1.59	---
ES1	1	10 mm	1.25	---
ES2	1	10 mm	1.42	---
ES3	1	10 mm	1.56	---
ES4	1	10 mm	1.97	---
ES5	1	10 mm	2.07	---
ES6	1	10 mm	2.36	---
ES39	1	10 mm	1.31	---
ES44	1	10 mm	2.28	---
ES53	1	10 mm	1.38	---
ES84	1	10 mm	1.62	---
ES106	1	10 mm	1.48	---
ES109	1	10 mm	0.95	---
ES115	1	10 mm	2.02	---
ES116	1	10 mm	1.24	---
ES170	1	10 mm	1.18	---
Code	**Type**	**"A" Dia.**	**B**	**C**
ES17	1	12 mm	1.25	---
ES18	1	12 mm	1.65	---
ES19	1	12 mm	1.88	---
ES20	1	12 mm	1.95	---
ES21	1	12 mm	2.28	---
ES37	1	12 mm	1.01	---
ES46	2	12 mm	1.88	0.62
ES54	1	12 mm	2.91	---
ES55	1	12 mm	1.56	---
ES61	1	12 mm	1.76	---
ES69	1	12 mm	1.58	---
ES83	1	12 mm	1.48	---
ES85	1	12 mm	2.36	---
ES107	1	12 mm	2.15	---
ES112	1	12 mm	1.08	---
ES114	1	12 mm	2.04	---
ES133	1	12 mm	1.93	---
ES141	1	12 mm	1.61	---
ES56	1	14 mm	1.38	---
ES60	1	14 mm	1.26	---
ES64	1	14 mm	1.19	---
ES86	1	14 mm	2.44	---
ES153	1	14 mm	1.55	---
ES167	1	14 mm	2.31	---
ES168	1	14 mm	2.62	---
ES169	1	14 mm	1.91	---
ES110	1	16 mm	1.61	---
ES113	1	16 mm	1.49	---
ES175	1	16 mm	1.96	---
ES176	1	16 mm	3.72	---
ES177	1	16 mm	3.55	---
ES104	1	20 mm	1.58	---
ES152	1	20 mm	1.69	---

Code	Type	"A" Dia.	B	C
CB6	3	10 mm	1.59	---
ES1	1	10 mm	1.25	---
ES2	1	10 mm	1.42	---
ES3	1	10 mm	1.56	---
ES4	1	10 mm	1.97	---
ES5	1	10 mm	2.07	---
ES6	1	10 mm	2.36	---
ES8	1	7⁄16	1.25	---
ES9	1	7⁄16	1.31	---
ES10	1	7⁄16	1.38	---
ES11	1	7⁄16	1.50	---
ES12	1	7⁄16	1.62	---
ES14	1	7⁄16	1.88	---
ES16	1	7⁄16	3.15	---
ES17	1	12 mm	1.25	---
ES18	1	12 mm	1.65	---
ES19	1	12 mm	1.88	---
ES20	1	12 mm	1.95	---
ES21	1	12 mm	2.28	---
ES22	1	½	1.25	---
ES23	1	½	1.31	---
ES24	1	½	1.38	---
ES25	1	½	1.48	---
ES26	1	½	1.56	---
ES27	1	½	1.62	---
ES31	2	½	2.25	1.00
ES32	1	½	3.34	---
ES34	1	9⁄16	1.66	---
ES35	1	⅝	1.38	---
ES36	1	¾	1.75	---
ES37	1	12 mm	1.01	---
ES38	1	7⁄16	2.16	---
ES39	1	10 mm	1.31	---
ES40	1	7⁄16	3.38	---
Code	**Type**	**"A" Dia.**	**B**	**C**
ES44	1	10 mm	2.28	---
ES45	1	½	1.53	---
ES46	2	12 mm	1.88	0.62
ES53	1	10 mm	1.38	---
ES54	1	12 mm	2.91	---
ES55	1	12 mm	1.56	---
ES56	1	14 mm	1.38	---
ES60	1	14 mm	1.26	---
ES61	1	12 mm	1.76	---
ES64	1	14 mm	1.19	---
ES69	1	12 mm	1.58	---
ES82	1	½	1.67	---
ES83	1	12 mm	1.48	---
ES84	1	10 mm	1.62	---
ES85	1	12 mm	2.36	---
ES86	1	114 mm	2.44	---
ES87	1	9⁄16	1.62	---
ES90	1	⅝	2.00	---
ES91	1	½	2.00	---
ES94	1	½	2.10	---
ES104	1	20 mm	1.58	---
ES106	1	10 mm	1.48	---
ES107	1	12 mm	2.15	---
ES109	1	10 mm	0.95	---
ES110	1	16 mm	1.61	---
ES112	1	12 mm	1.08	---
ES113	1	16 mm	1.49	---
ES114	1	12 mm	2.04	---
ES115	1	10 mm	2.02	---
ES116	1	10 mm	1.24	---
ES120	1	¾	2.76	---
ES121	1	¾	2.06	---
ES126	1	½	2.44	---
ES128	1	½	1.66	--
Code	**Type**	**"A" Dia.**	**B**	**C**
ES130	1	½	1.56	---
ES133	1	12 mm	1.93	---
ES136	1	⅝	1.75	---
ES141	1	12 mm	1.61	---
ES143	1	9⁄16	1.60	---
ES145	1	7⁄16	2.25	---
ES149	1	½	2.36	---
ES150	1	¾	2.24	---
ES151	1	½	2.44	---
ES152	1	20 mm	1.69	---
ES153	1	14 mm	1.55	---
ES157	2	½	2.05	0.95
ES158	1	¾	3.80	---
ES159	2	¾	3.21	1.03
ES160	1	1.00	2.01	---
ES161	1	⅝	3.95	---
ES162	1	⅝	2.60	---
ES163	1	7⁄16	2.50	---
ES164	1	½	2.26	---
ES165	1	½	1.75	---
ES166	1	⅝	2.97	---
ES167	1	14 mm	2.31	---
ES168	1	14 mm	2.62	---
ES169	1	14 mm	1.91	---
ES170	1	10 mm	1.18	---
ES171	1	½	1.88	---
ES172	1	½	2.72	---
ES173	1	⅞	2.28	---
ES174	1	⅝	3.25	---
ES175	1	16 mm	1.96	---
ES176	1	16 mm	3.72	---
ES177	1	16 mm	3.55	---
ES178	1	¾	1.96	---

MOUNTING CODES “S” & “DS” STUD MOUNTS
CODIGOS DE FIJACION «S» Y «DS» FIJACIONES DE DOBLE PERNO
CODES DE MONTURE “S” & “DS” À GOUJON

S

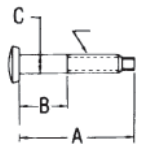

D (Thread Size)
D (Tamaño de filete)
D (Filet)

DS

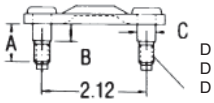

D (Thread Size)
D (Tamaño de filete)
D (Filet)

Code	A	B	C	D	Code	A	B	C	D	Code	A	B	C	D
DS1	1.25	0.44	3/8	5/16 - 24	S13	2.06	1.35	3/8	3/8 - 24	S33	3.44	2.17	10 mm	10 mm
S1	2.37	1.00	3/8	3/8 - 24	S14	2.25	1.33	7/16	3/8 - 24	S36	1.24	0.65	3/8	3/8 - 24
S2	2.06	1.00	3/8	3/8 - 24	S16	2.95	1.45	16 mm	16 x 1.5	S38	2.75	1.70	14 mm	12 mm
S4	1.75	1.00	3/8	3/8 - 24	S17	2.15	1.03	7/16	3/8 - 24	S39	3.55	1.75	5/8	5/8 - 18
S6	2.58	1.47	7/16	3/8 - 24	S21	3.28	1.75	5/8	5/8 - 18	S40	2.52	1.33	7/16	3/8 - 24
S7	1.97	1.00	3/8	3/8 - 24	S23	1.84	1.05	3/8	3/8 - 24	S41	3.48	2.32	5/8	1/2 - 20
S10	2.37	1.33	7/16	3/8 - 24	S28	2.34	1.33	7/16	3/8 - 16	S42	3.50	2.00	5/8	5/8 - 18
S11	2.37	1.21	7/16	3/8 - 24	S29	2.99	1.87	3/8	3/8 - 24	S43	2.75	1.25	5/8	5/8 - 18
S12	2.37	1.15	7/16	3/8 - 24	S30	3.44	1.30	7/16	10 mm					

EXPLANATION OF COLUMN HEADINGS
EXPLICACION DE LOS TITULOS DE LAS COLUMNA
EXPLICATION DES EN-TÊTES DE COLONNES

SHOCK ABSORBER PART NUMBER:
The catalog number for the individual shock absorber.

EXTENDED LENGTH:*
The length of the shock absorber when it is fully extended. See “How to Measure” instructions.

COLLAPSED LENGTH:*
The length of the shock absorber when it is fully compressed.
See “How to Measure” instructions.

STROKE:
This is the approximate length of the stroke of the individual shock absorber being described.

MOUNTING CODES:
Indicates the type of mounting ends for the upper and lower end of each shock absorber.
They are listed as follows:
Stud Type Mounts (“S” & “DS”)
Eye Ring and Bushing Mounts (“EB”)
Eye Ring and Bushing with Sleeve Mounts (“ES”)
Eye Ring and Bushing with Bar Pin Mounts (“BP”)
Special Mounting Codes (“SP”)

DUST TUBE:
Indicates whether the shock absorber is supplied with a dust tube.

MOUNTING ACCESSORY PACKAGE NUMBER:
The part number of the Mount Accessory Package supplied with the shock absorber.

***NOTE:**
All dimensions shown are in inches

Número de parte del amortiguador :
El número de catálogo para el amortiguador individual

Longitud extendida :
La longitud del amortiguador cuando es totalmente extendido. Ver instrucciones «Cómo medir»

Longitud comprimida :
La longitud del amortiguador cuando es totalmente comprimido. Ver instrucciones «Cómo medir»

Carrera :
Es la longitud aproximada de la carrera del amortiguador descrito

Códigos de fijación :
Indica el tipo de montantes de fijación superior e inferior para cada amortiguador.
Se listan como sigue :
Fijaciones de tipo perno («S» y «DS»)
Fijaciones de anillo y buje («EB»)
Fijaciones de anillo y buje con camisa («ES»)
Fijaciones de anillo y buje con clavija («BP»)
Códigos de fijación especiales («SP»)

Tubo de polvo :
Indica si el amortiguador está provisto con un tubo de polvo.

Número de paquete de accesorios de fijación :
El número de parte del paquete de accesorios de fijación provisto con el amortiguador

***NOTA :**
Todas las dimensiones son en pulgadas

Numéro de pièce de l’amortisseur:
Le numéro de catalogue pour l’amortisseur individuel.

Longueur étirée:*
La longueur de l’amortisseur entièrement étiré. Voir “Comment mesurer”.

Longueur comprimée:*
La longueur de l’amortisseur entièrement comprimé. Voir “Comment mesurer”.

Course:
C’est la longueur approximative de la course de l’amortisseur individuel décrit.

Codes de monture:
Indique le type de montures supérieure et inférieure de chaque amortisseur.
Ils sont énumérés comme suit:
Montures de type goujon (“S” & “DS”)
Montures à bague et manchon (“EB”)
Montures à bague et manchon avec collet (“ES”)
Montures à bague et manchon avec goupille (“BP”)
Codes de montures spéciales (“SP”)

Tube pare-poussière:
Indique que l’amortisseur est fourni avec un tube pare-poussière.

Numéro d’emballage d’accessoires de montage:
Le numéro de pièce de l’emballage d’accessoires de montage fourni avec l’amortisseur.

***NOTE:**
Toutes les dimensions indiquées sont en pouces

STEP 4:

Refer to shock absorber specifications by end mount. Start first by finding the appropriate series. Next, match the extended/collapsed length and find the correct mounting codes. Refer to the far left column of the chart for the correct Gabriel Shock Absorber part number.

4º PASO

Consulte las especificaciones del amortiguador mostradas al final del catálogo. Encuentre primero la serie adecuada. Luego, compare las longitudes de extensión y de compresión, y encuentre los códigos de fijación correctos. Consulte la columna del extremo izquierdo de la tabla para identificar el número de parte del amortiguador Gabriel correcto.

4E ÉTAPE

Reportez-vous aux spécifications d’amortisseur énoncées à la fin du catalogue. Trouvez d’abord la série appropriée. Comparez ensuite les longueurs d’extension et de compression et trouvez les bons codes de fixation. Reportez-vous à la colonne située à la extrême gauche du tableau pour identifier le bon numéro de pièce pour un amortisseur Gabriel.